T.O. 1U-16(H)A-2-10
(Formerly 1A-16(S)A-2-10)

TECHNICAL MANUAL

ORGANIZATIONAL MAINTENANCE

16 AUG 1972

RADIO, COMMUNICATIONS, AND NAVIGATION SYSTEMS

REFERENCE USE ONLY

USAF MODELS

HU-16A, HU-16B

AIRCRAFT

EACH TRANSMITTAL OF THIS DOCUMENT OUTSIDE OF THE DEPARTMENT OF DEFENSE MUST HAVE APPROVAL OF THE TECHNICAL ORDER DISTRIBUTION CONTROL ACTIVITY. REFER TO T.O. 00 5 2.

CHANGE NOTICE

THESE PAGES FOR INSERTION ONLY. THEY DO NOT REPLACE EXISTING WHITE PAGES.

PUBLISHED UNDER AUTHORITY OF THE SECRETARY OF THE AIR FORCE

AFLC RAFB,GA MAY 69 - 600

1 FEBRUARY 1959
CHANGED 17 APRIL 1969

Reproduction for nonmilitary use of the information or illustrations contained in this publication is not permitted without specific approval of the issuing service (NASC or USAF). The policy for use of Classified Publications is established for the Air Force in AFR 205-1 and the Navy in Navy Regulations, Article 1509

Technical Orders are normally distributed promptly after printing. Date(s) shown on the title page (lower right) are for identification only. This is not a distribution date. Processing time sometimes causes distribution to only appear to have been delayed.

LIST OF EFFECTIVE PAGES

NOTE: INSERT LATEST CHANGED PAGES IN THE BASIC MANUAL FACING THE AFFECTED PAGE.

Page No.	*Issue*
Title	17 Apr 69
A-A	17 Apr 69
iA	17 Apr 69
ivA	17 Apr 69
12B-1 - 12B-3	17 Apr 69
12B-4 Blank.	17 Apr 69

NOTE: THIS PAGE PROVIDES A CUMULATIVE LISTING OF OUTSTANDING TECHNICAL ORDER PAGE SUPPLEMENT (TOPS) CHANGES APPLICABLE TO THE BASIC MANUAL.

Upon receipt of the second and subsequent changes to this technical order, personnel responsible for maintaining this publication in current status will ascertain that all previous changes have been received and incorporated. Action should be taken promptly if the publication is incomplete.

ADDITIONAL COPIES OF THIS PUBLICATION MAY BE OBTAINED AS FOLLOWS: **USAF**

USAF ACTIVITIES. – In accordance with T.O. 00-5-2.

NAVY ACTIVITIES. - Use Publications and Forms Order Blank (NAVAIR 140) and submit in accordance with instruction thereon. For listing of available material and details of distribution see Naval Air Systems Command Publications Index NAVAIR 00-500.

16 AUG 1972

T.O. 1U-16(H)A-2-10
5282 (Formerly 1A-16(S)A-2-10)

TECHNICAL MANUAL

ORGANIZATIONAL MAINTENANCE

RADIO, COMMUNICATIONS, AND NAVIGATION SYSTEMS

USAF MODELS

HU-16A, HU-16B

AIRCRAFT

REFERENCE USE ONLY

This review title page replaces title page dated 1 February 1959, changed 17 April 1969.

PUBLISHED UNDER AUTHORITY OF THE SECRETARY OF THE AIR FORCE

AFLC RAFB, GA

1 FEBRUARY 1959
CHANGED 17 APRIL 1969
Reviewed and current on 31 January 1972

Reproduction for nonmilitary use of the information or illustrations contained in this publication is not permitted without specific approval of the issuing service (BuAer or USAF). The policy for use of Classified Publications is established for the Air Force in AFR 205-1 and for the Navy in Navy Regulations, Article 1509.

LIST OF EFFECTIVE PAGES

INSERT LATEST CHANGED PAGES, DESTROY SUPERSEDED PAGES.

NOTE: The portion of the text affected by the changes is indicated by a vertical line in the outer margins of the page.

TOTAL NUMBER OF PAGES IN THIS PUBLICATION IS 238 CONSISTING OF THE FOLLOWING:

Page No.	Issue
*Title	9 Sep 65
*A thru B	9 Sep 65
*C Blank	9 Sep 65
i thru vi	15 Apr 65
vii	1 Nov 63
viii Blank	Original
1-1 thru 1-7	Original
*1-8 thru 1-9	9 Sep 65
1-10 Blank	Original
2-1 thru 2-4	Original
*2-5	9 Sep 65
2-6 thru 2-7	Original
*2-8	9 Sep 65
2-9	Original
2-10 Blank	Original
3-1	1 Nov 63
*3-2	9 Sep 65
3-3	1 Nov 63
3-4 thru 3-6	Original
4-1	Original
*4-2	9 Sep 65
4-3 thru 4-4	Original
5-1 thru 5-4	Original
*5-5	9 Sep 65
5-6 thru 5-8	Original
6-1 thru 6-2	Original
*6-3	9 Sep 65
6-4 thru 6-5	Original
6-6 Blank	Original
7-1	Original
*7-2	9 Sep 65
7-3	Original
*7-4	9 Sep 65
7-5	Original
7-6 Blank	Original
*8-1 thru 8-5	9 Sep 65
8-6	Original
*8-7	9 Sep 65
8-8 thru 8-9	Original
8-10 Blank	Original
*9-1	9 Sep 65
9-2 thru 9-7	Original
9-8 Blank	Original
*10-1	9 Sep 65
10-2 thru 10-7	Original
10-8 Blank	Original
*11-1	9 Sep 65
11-2 thru 11-6	Original
*11A-1	9 Sep 65
11A-2 thru 11A-5 Added	1 Nov 63
11A-6 Blank	1 Nov 63
*12-1	9 Sep 65
12-2 thru 12-6	Original
12A-1 thru 12A-4 Added	15 Apr 65
*13-1	9 Sep 65
13-2 thru 13-6	1 Nov 63
*14-1	9 Sep 65
14-2 thru 14-6	1 Nov 63
*15-1	9 Sep 65
15-2 thru 15-4	1 Nov 63
15-5	Original
15-6 thru 15-7	1 Nov 63
15-8	Original
16-1 thru 16-7	Original
*16-8	9 Sep 65
16-9	Original
16-10 Blank	Original
17-1 thru 17-3	Original
*17-4 thru 17-5	9 Sep 65
17-6	Original
18-1 thru 18-2	Original
*18-3	9 Sep 65
18-4 thru 18-6	Original
19-1 thru 19-2	Original
*19-3	9 Sep 65
19-4 thru 19-7	Original
19-8 Blank	Original
*20-1	9 Sep 65
20-2 thru 20-5	Original
*20-6	9 Sep 65
20-7	Original
*20-8	9 Sep 65

* The asterisk indicates pages changed, added, or deleted by the current change.

ADDITIONAL COPIES OF THIS PUBLICATION MAY BE OBTAINED AS FOLLOWS:

USAF ACTIVITIES.—In accordance with T.O. 00-5-2. **USAF**

NAVY ACTIVITIES.—Submit request to nearest supply point listed below, using form NavAer 140; NASD, Philadelphia, Pa.; NAS, Alameda, Calif.; NAS, Jacksonville, Fla.; NAS, Norfolk, Va.; NAS, San Diego, Calif.; NAS, Seattle, Wash.; ASD, NSC, Guam.

For listing of available material and details of distribution see Naval Aeronautics Publications Index NavAer 00-500.

Reproduction for nonmilitary use of the information or illustrations contained in this publication is not permitted without specific approval of the issuing service (NASC or USAF). The policy for use of Classified Publications is established for the Air Force in AFR 205-1 and the Navy in Navy Regulations, Article 1509

Technical Orders are normally distributed promptly after printing. Date(s) shown on the title page (lower right) are for identification only. This is not a distribution date. Processing time sometimes causes distribution to only appear to have been delayed.

LIST OF EFFECTIVE PAGES

NOTE: INSERT LATEST CHANGED PAGES IN THE BASIC MANUAL FACING THE AFFECTED PAGE.

Page No.	*Issue*
Title	17 Apr 69
A-A	17 Apr 69
iA	17 Apr 69
ivA	17 Apr 69
12B-1 - 12B-3	17 Apr 69
12B-4 Blank.	17 Apr 69

NOTE: THIS PAGE PROVIDES A CUMULATIVE LISTING OF OUTSTANDING TECHNICAL ORDER PAGE SUPPLEMENT (TOPS) CHANGES APPLICABLE TO THE BASIC MANUAL.

Upon receipt of the second and subsequent changes to this technical order, personnel responsible for maintaining this publication in current status will ascertain that all previous changes have been received and incorporated. Action should be taken promptly if the publication is incomplete.

ADDITIONAL COPIES OF THIS PUBLICATION MAY BE OBTAINED AS FOLLOWS: **USAF**

USAF ACTIVITIES. – In accordance with T.O. 00-5-2.

NAVY ACTIVITIES. – Use Publications and Forms Order Blank (NAVAIR 140) and submit in accordance with instruction thereon. For listing of available material and details of distribution see Naval Air Systems Command Publications Index NAVAIR 00-500.

Reproduction for nonmilitary use of the information or illustrations contained in this publication is not permitted without specific approval of the issuing service (BuAer or USAF). The policy for use of Classified Publications is established for the Air Force in AFR 205-1 and for the Navy in Navy Regulations, Article 1509.

LIST OF EFFECTIVE PAGES

INSERT LATEST CHANGED PAGES, DESTROY SUPERSEDED PAGES.

NOTE: The portion of the text affected by the changes is indicated by a vertical line in the outer margins of the page.

TOTAL NUMBER OF PAGES IN THIS PUBLICATION IS CONSISTING OF THE FOLLOWING:

Page No.	Issue
20-9 thru 20-11	Original
20-12 Blank	Original
21-1 thru 21-3	Original
*21-4	9 Sep 65
21-5 thru 21-10	Original
*21-11	9 Sep 65
21-12 Blank	Original
*22-1	9 Sep 65
22-2 thru 22-4	Original
*23-1	9 Sep 65
23-2 thru 23-6	Original
24-1 thru 24-5	15 Apr 65
*24-6	9 Sep 65
25-1	Original
*25-2	9 Sep 65
25-3 thru 25-4	Original
26-1 thru 26-3	Original
26-4 Blank	Original
27-1 thru 27-2 Added	1 Nov 63
*27-3	9 Sep 65
27-4 thru 27-6 Added	1 Nov 63
28-1 thru 28-5 Added	1 Nov 63
*28-6 thru 28-7	9 Sep 65
28-8 thru 28-12 Added	1 Nov 63
29-1 thru 29-4 Added	1 Nov 63
*29-5	9 Sep 65
29-6 thru 29-10 Added	1 Nov 63
1 thru 3	15 Apr 65
4 Blank	1 Nov 63

Fold-out pages for this entire book are located at the end of this publication and may be put into numerical order by the user.

* The asterisk indicates pages changed, added, or deleted by the current change.

ADDITIONAL COPIES OF THIS PUBLICATION MAY BE OBTAINED AS FOLLOWS:

USAF ACTIVITIES.—In accordance with T.O. 00-5-2. **USAF**

NAVY ACTIVITIES.—Submit request to nearest supply point listed below, using form NavAer 140; NASD, Philadelphia, Pa.; NAS, Alameda, Calif.; NAS, Jacksonville, Fla.; NAS, Norfolk, Va.; NAS, San Diego, Calif.; NAS, Seattle, Wash.; ASD, NSC, Guam.

For listing of available material and details of distribution see Naval Aeronautics Publications Index NavAer 00-500.

Fold-out pages for this entire book are located at the end of this publication and may be put into numerical order by the user.

Add the following to the Table of Contents after Section XII (A):

Section		Page
XII B	HF SSB 618T-2 TRANSCEIVER	12B-1
	12B-1 Description and Leading Particulars ...	12B-1
	12B-3 Transceiver 618T-2	12B-1
	12B-4 Control Panel 714E-3	12B-1
	12B-5 Antenna Tuner 180L-3.....	12B-1
	12B-6 Antenna	12B-1
	12B-7 Operational Check	12B-1
	12B-9 System Analysis	12B-2
	12B-10 Troubleshooting 618T-2	12B-3

Add the following to the Table of Contents after Section XII (A):

Section		Page
XII B	HF SSB 618T-2 TRANSCEIVER	12B-1
	12B-1 Description and Leading Particulars ...	12B-1
	12B-3 Transceiver 618T-2	12B-1
	12B-4 Control Panel 714E-3	12B-1
	12B-5 Antenna Tuner 180L-3.....	12B-1
	12B-6 Antenna	12B-1
	12B-7 Operational Check	12B-1
	12B-9 System Analysis	12B-2
	12B-10 Troubleshooting 618T-2	12B-3

TABLE OF CONTENTS

Section		Page
LIST OF ILLUSTRATIONS		iii
INTRODUCTION		vi
LIST OF HU-16A AND HU-16B MAINTENANCE TECHNICAL MANUALS		vii,viii
I	F-1 AUTOMATIC PILOT SYSTEM	1–1
1–1	Description and Leading Particulars	1–1
1–17	Operational Checkout	1–8
1–19	System Analysis	1–8
1–21	Removal and Replacement	1–9,1–10
1–26	Adjustment	1–9,1–10
II	N-1 COMPASS SYSTEM	2–1
2–1	Description and Leading Particulars	2–1
2–11	Operational Checkout	2–5
2–13	System Analysis	2–7
2–15	Adjustment	2–8
III	RADIO RECEIVING SET AN/ARN-18	3–1
3–1	Description and Leading Particulars	3–1
3–5	Operational Checkout	3–2
3–7	System Analysis	3–4
3–9	Removal and Replacement	3–5
IV	RADIO RECEIVING SET AN/ARN-5B	4–1
4–1	Description and Leading Particulars	4–1
4–5	Operational Checkout	4–2
4–7	System Analysis	4–2
4–9	Removal and Replacement	4–4
V	RADIO SET AN/ARN-21	5–1
5–1	Description and Leading Particulars	5–1
5–11	Operational Checkout	5–5
5–13	System Analysis	5–5
5–15	Removal and Replacement	5–6
VI	MARKER BEACON RECEIVING SET AN/ARN-12	6–1
6–1	Description and Leading Particulars	6–1
6–5	Operational Checkout	6–3
6–7	System Analysis	6–3
6–9	Removal and Replacement	6–5,6–5
6–12	Adjustment	6–5,6–6
VII	MARKER BEACON RECEIVING SET RC-193A	7–1
7–1	Description and Leading Particulars	7–1
7–6	Operational Checkout	7–2
7–8	System Analysis	7–3
7–10	Removal and Replacement	7–4
7–12	Adjustment	7–4
VIII	RADIO RECEIVING SET AN/ARN-14	8–1
8–1	Description and Leading Particulars	8–1
8–10	Operational Checkout	8–5
8–12	System Analysis	8–7
8–14	Removal and Replacement	8–9,8–10
IX	RADIO COMPASS AN/ARN-6	9–1
9–1	Description and Leading Particulars	9–1
9–7	Operational Checkout	9–1
9–9	System Analysis	9–5
X	RADIO COMPASS AN/ARN-7	10–1
10–1	Description and Leading Particulars	10–1
10–9	Operational Checkout	10–1
10–11	System Analysis	10–3
10–13	Removal and Replacement	10–4
10–16	Adjustment	10–6
XI	VHF COMMAND AN/ARC-3	11–1
11–1	Description and Leading Particulars	11–1
11–8	Operational Checkout	11–1
11–10	System Analysis	11–3
11–12	Removal and Replacement	11–5
XI(A)	VHF COMMAND VHF-101	11A-1
11A-1	Description and Leading Particulars	11A-1
11A-7	Operational Checkout	11A-1
11A-9	System Analysis	11A-3
XII	LIAISON SET AN/ARC-8	12–1
12–1	Description and Leading Particulars	12–1
12–6	Operational Checkout	12–1
12–8	System Analysis	12–1
XII(A)	LIAISON RECEIVER 51S-1B	12A-1
12A-1	Description and Leading Particulars	12A-1
12A-5	Operational Check	12A-1
12A-6	System Analysis	12A-1
XIII	UHF COMMAND AN/ARC-27	13–1
13–1	Description and Leading Particulars	13–1
13–7	Operational Checkout	13–1
13–9	System Analysis	13–5

TABLE OF CONTENTS (Continued)

Section		Page
XIV	INTERCOMMUNICATION SET AN/AIC-3	14-1
14-1	Description and Leading Particulars	14-1
14-8	Operational Checkout	14-1
14-10	System Analysis	14-3
XV	INTERCOMMUNICATION SET AN/AIC-8	15-1
15-1	Description and Leading Particulars	15-1
15-10	Operational Checkout	15-1
15-12	System Analysis	15-5
XVI	INTERCOMMUNICATION SET AN/AIC-10	16-1
16-1	Description and Leading Particulars	16-1
16-10	Operational Checkout	16-8
16-12	System Analysis	16-8
XVII	RADAR SET AN/APX-6	17-1
17-1	Description and Leading Particulars	17-1
17-7	Operational Checkout	17-3
17-9	System Analysis	17-4
17-11	Removal and Replacement	17-5
XVIII	INTERROGATOR SET AN/APX-28	18-1
18-1	Description and Leading Particulars	18-1
18-9	Operational Checkout	18-1
18-11	System Analysis	18-5
XIX	RADIO ALTIMETER AN/APN-1	19-1
19-1	Description and Leading Particulars	19-1
19-8	Operational Checkout	19-1
19-10	System Analysis	19-7, 19-8
XX	RADAR SET AN/APN-9 OR AN/APN-9A	20-1
20-1	Description and Leading Particulars	20-1
20-7	Operational Checkout	20-1
20-10	System Analysis	20-7
20-12	Adjustment	20-8
XXI	RADAR SET AN/APS-31 OR AN/APS-31A	21-1
21-1	Description and Leading Particulars	21-1
21-15	Operational Checkout	21-4
21-17	System Analysis	21-8
21-19	Removal and Replacement	21-11, 21-12
XXII	CONTROL KEYER GROUP AN/ARA-26	22-1
22-1	Description and Leading Particulars	22-1
22-5	Operational Checkout	22-1
22-7	System Analysis	22-3
XXIII	HOMING ADAPTER AN/ARA-8A	23-1
23-1	Description and Leading Particulars	23-1
23-9	Operational Checkout	23-1
23-11	System Analysis	23-3
23-13	Removal and Replacement	23-4
XXIV	DIRECTION FINDER GROUP AN/ARA-25	24-1
24-1	Description and Leading Particulars	24-1
24-7	Operational Checkout	24-5
24-9	System Analysis	24-6
XXV	RANGE RECEIVER SET	25-1
25-1	Description and Leading Particulars	25-1
25-6	Operational Checkout	25-2
25-8	System Analysis	25-3
25-10	Removal and Replacement	25-3
XXVI	RADIO SET AN/CRT-3	26-1
26-1	Description and Leading Particulars	26-1
26-6	Operational Checkout	26-1
XXVII	RADAR ALTIMETER AN/APN-22	27-1
27-1	Description and Leading Particulars	27-1
27-7	Operational Checkout	27-3
27-9	System Analysis	27-3
XXVIII	VHF RADIO SET AN/ARC-73 AND INTEGRATION WITH RELATED EQUIPMENT	28-1
28-1	Description and Leading Particulars	28-1
28-22	Operational Checkout	28-5
28-29	System Analysis	28-7
XXIX	DOPPLER RADAR SET AN/APN-501G	29-1
29-1	Description and Leading Particulars	29-1
29-24	Operational Checkout	29-4
29-26	System Analysis	29-6
ALPHABETICAL INDEX		1

LIST OF ILLUSTRATIONS

Number	Title	Page
1–1	F-1 Autopilot System Component Locations	1–2
1–2	F-1 Autopilot System Complete Functional Data Flow	1–4
1–3	F-1 Autopilot System Cabling Diagram	1–5
1–4	F-1 Autopilot System Power Distribution, Connection to Aircraft	1–6
1–5	F-1 Autopilot System Intercabling Used With N-1 Compass System	1–7
1–6	Resetting F-1 Autopilot Emergency Disconnect	1–9,1–10
2–1	N-1 Compass System Component Locations	2–2
2–2	N-1 Compass System Complete Functional Data Flow	2–3
2–3	N-1 Compass System Cabling Diagram	2–4
2–4	N-1 Compass System Power Distribution, Connection to Aircraft	2–5
2–5	N-1 Compass System Intercabling	2–6
2–6	Adjustment of Master Indicator	2–8
3–1	Radio Receiving Set AN/ARN-18 Component Locations	3–1
3–2	Radio Receiving Set AN/ARN-18 Complete Functional Data Flow	3–2
3–3	Radio Receiving Set AN/ARN-18 Cabling Diagram	3–3
3–4	Radio Receiving Set AN/ARN-18 Connection To Signal Generator	3–4
3–5	Radio Receiving Set AN/ARN-18 Power Distribution, Connection to Aircraft	3–5
3–6	Radio Receiving Set AN/ARN-18 System Intercabling	3–6
4–1	Radio Receiving Set AN/ARN-5B Component Locations	4–1
4–2	Radio Receiving Set AN/ARN-5B Complete Functional Data Flow	4–2
4–3	Radio Receiving Set AN/ARN-5B Cabling Diagram	4–3
4–4	Radio Receiving Set AN/ARN-5B Power Distribution, Connection to Aircraft	4–4
4–5	Radio Receiving Set AN/ARN-5B System Intercabling	4–4
5–1	Radio Set AN/ARN-21 Component Locations	5–2
5–2	Radio Set AN/ARN-21 Complete Functional Data Flow	5–3
5–3	Radio Set AN/ARN-21 Cabling Diagram	5–4
5–4	Radio Set AN/ARN-21 Power Distribution, Connection to Aircraft	5–6
5–5	Radio Set AN/ARN-21 System Intercabling	5–7
6–1	Marker Beacon Receiving Set AN/ARN-12 Component Locations	6–1
6–2	Marker Beacon Receiving Set AN/ARN-12 Complete Functional Data Flow	6–2
6–3	Marker Beacon Receiving Set AN/ARN-12 Cabling Diagram	6–2
6–4	Marker Beacon Receiving Set AN/ARN-12 Power Distribution, Connection To Aircraft	6–3
6–5	Marker Beacon Receiving Set AN/ARN-12 System Intercabling	6–4
7–1	Marker Beacon Receiving Set RC-193A Component Locations	7–1
7–2	Marker Beacon Receiving Set RC-193A Complete Functional Data Flow	7–2
7–3	Marker Beacon Receiving Set RC-193A Cabling Diagram	7–3
7–4	Marker Beacon Receiving Set RC-193A Power Distribution, Connection to Aircraft	7–4
7–5	Marker Beacon Receiving Set RC-193A System Intercabling	7–5,7–6
8–1	Radio Receiving Set AN/ARN-14 Component Locations	8–2
8–2	Radio Receiving Set AN/ARN-14 Complete Functional Data Flow	8–3
8–3	Radio Receiving Set AN/ARN-14 Cabling Diagram	8–4
8–4	Radio Receiving Set AN/ARN-14 Connection to Signal Generator	8–6
8–5	Radio Receiving Set AN/ARN-14 Power Distribution, Connection to Aircraft	8–7
8–6	Radio Receiving Set AN/ARN-14 System Intercabling	8–8
9–1	Radio Compass AN/ARN-6 Component Locations	9–2
9–2	Radio Compass AN/ARN-6 Complete Functional Data Flow	9–3
9–3	Radio Compass AN/ARN-6 Cabling Diagram	9–4
9–4	Radio Compass AN/ARN-6 Power Distribution, Connection to Aircraft	9–5
9–5	Radio Compass AN/ARN-6 System Intercabling	9–6
10–1	Radio Compass AN/ARN-7 Component Locations	10–2
10–2	Radio Compass AN/ARN-7 Complete Functional Data Flow	10–4

LIST OF ILLUSTRATIONS (Continued)

Number	Title	Page
10–3	Radio Compass AN/ARN-7 Cabling Diagram	10–5
10–4	Radio Compass AN/ARN-7 Power Distribution, Connection to Aircraft	10–6
10–5	Radio Compass AN/ARN-7 System Intercabling	10–7, 10–8
11–1	VHF Command AN/ARC-3 Component Locations	11–2
11–2	VHF Command AN/ARC-3 Complete Functional Data Flow	11–3
11–3	VHF Command AN/ARC-3 Cabling Diagram	11–4
11–4	VHF Command AN/ARC-3 Power Distribution, Connection to Aircraft	11–5
11–5	VHF Command AN/ARC-3 System Intercabling	11–6
11A-1	VHF Command VHF-101	11A-2
11A-2	Table of Typical Circuit Meter Indication	11A-3
11A-3	VHF Command VHF-101 Complete Functional Data Flow	11A-4
11A-4	VHF Command VHF-101 Power Distribution to Aircraft	11A-5
12–1	Liaison Set AN/ARC-8 Component Locations	12–2
12–2	Liaison Set AN/ARC-8 Complete Functional Data Flow	12–3
12–3	Liaison Set AN/ARC-8 Cabling Diagram	12–4
12–4	Liaison Set AN/ARC-8 Power Distribution, Connection to Aircraft	12–5
12–5	Liaison Set AN/ARC-8 System Intercabling	12–6
12A-1	Liaison Receiver 51S-1B Component Locations	12A-2
12A-2	Liaison Receiver 51S-1B Power Distribution, Connection to Aircraft	12A-3
12A-3	Liaison Receiver 51S-1B Complete Functional Data Flow	12A-3
13–1	UHF Command AN/ARC-27 Component Locations	13–2
13–2	UHF Command AN/ARC-27 Complete Functional Data Flow	13–3
13–3	UHF Command AN/ARC-27 Cabling Diagram	13–4
13–4	UHF Command AN/ARC-27 Power Distribution, Connection to Aircraft	13–5
13–5	UHF Command AN/ARC-27 System Intercabling	13–6
14–1	Intercommunication Set AN/AIC-3 Component Locations	14–2
14–2	Intercommunication Set AN/AIC-3 Complete Functional Data Flow	14–3
14–3	Intercommunication Set AN/AIC-3 Cabling Diagram	14–4
14–4	Intercommunication Set AN/AIC-3 Power Distribution, Connection to Aircraft	14–5
14–5	Intercommunication Set AN/AIC-3 System Intercabling	14–6
15–1	Intercommunication Set AN/AIC-8 Component Locations	15–2
15–2	Intercommunication Set AN/AIC-8 Complete Functional Data Flow	15–3
10–2	Radio Compass AN/ARN-7 Complete Locations	10–2
15–4	Intercommunication Set AN/AIC-8 Power Distribution, Connection to Aircraft	15–5
15–5	Intercommunication Set AN/AIC-8 System Intercabling	15–6
16–1	Intercommunication Set AN/AIC-10 Component Locations	16–2
16–2	Intercommunication Set AN/AIC-10 Complete Functional Data Flow	16–3
16–3	Intercommunication Set AN/AIC-10 Cabling Diagram	16–4
16–4	Intercommunication Set AN/AIC-10 Power Distribution, Connection to Aircraft	16–5
16–5	Intercommunication Set AN/AIC-10 System Intercabling	16–6
17–1	Radar Set AN/APX-6 Component Locations	17–1
17–2	Radar Set AN/APX-6 Complete Functional Data Flow	17–2
17–3	Radar Set AN/APX-6 Cabling Diagram	17–2
17–4	Radar Set AN/APX-6 Power Distribution, Connection to Aircraft	17–3
17–5	Radar Set AN/APX-6 System Intercabling	17–5
18–1	Interrogator Set AN/APX-28 Component Locations	18–2
18–2	Interrogator Set AN/APX-28 Complete Functional Data Flow	18–3
18–3	Interrogator Set AN/APX-28 Cabling Diagram	18–4
18–4	Interrogator Set AN/APX-28 Power Distribution, Connection to Aircraft	18–5
18–5	Interrogator Set AN/APX-28 System Intercabling	18–6
19–1	Radio Altimeter AN/APN-1 Component Locations	19–2
19–2	Radio Altimeter AN/APN-1 Complete Functional Data Flow	19–3
19–3	Radio Altimeter AN/APN-1 Cabling Diagram	19–4
19–4	Indicator ID-98/APN-1	19–5

Add the following figure to the List of Illustrations:

12B-1 . 618T-2 SSB Communication Set Troubleshooting Chart.....12B-2

Add the following figure to the List of Illustrations:

12B-1 . 618T-2 SSB Communication Set Troubleshooting Chart.....12B-2

LIST OF ILLUSTRATIONS (Continued)

Number	Title	Page
19–5	AN/APN-1 Wiring Check Setup	19–5
19–6	Radio Altimeter AN/APN-1 Power Distribution, Connection to Aircraft	19–5
19–7	Radio Altimeter AN/APN-1 System Intercabling	19–6
20–1	Radar Set AN/APN-9 or AN/APN-9A Component Locations	20–2
20–2	Radar Set AN/APN-9 or AN/APN-9A Complete Functional Data Flow	20–3
20–3	Radar Set AN/APN-9 or AN/APN-9A Cabling Diagram	20–4
20-4	AN/APN-9 Scope Indications	20-5
20-5	Station 6-Rate Count of 2 Indication.	20-6
20-6	Test Set TS-251/UP and AN/APN-9A Cabling Diagram	20-7
20-7	Radar Set AN/APN-9 or AN/APN-9A Power Distribution, Connection to Aircraft	20-8
20-8	Radar Set AN/APN-9 or AN/APN-9A System Intercabling	20-10
21-1	Radar Set AN/APS-31 or AN/APS-31A Component Locations	21-2
21-2	Radar Set AN/APS-31 or AN/APS-31A Complete Functional Data Flow	21-4
21-3	Radar Set AN/APS-31 or AN/APS-31A Cabling Diagram	21-5
21-4	Radar Set AN/APS-31 or AN/APS-31A Power Distribution, Connection to Aircraft	21-9
21-5	Radar Set AN/APS-31 or AN/APS-31A System Intercabling	21-10
22-1	Control Keyer Group AN/ARA-26 Component Locations	22-1
22-2	Control Keyer Group AN/ARA-26 Complete Functional Data Flow	22-2
22-3	Control Keyer Group AN/ARA-26 Cabling Diagram	22-2
22-4	Control Keyer Group AN/ARA-26 Power Distribution, Connection to Aircraft	22-3
22-5	Control Keyer Group AN/ARA-26 System Intercabling	22-4
23-1	Homing Adapter AN/ARA-8A Component Locations	23-2
23-2	Homing Adapter AN/ARA-8A Complete Functional Data Flow	23-3
23-3	Homing Adapter AN/ARA-8A Cabling Diagram	23-4
23-4	Homing Adapter AN/ARA-8A Power Distribution, Connection to Aircraft	23-5
23-5	Homing Adapter AN/ARA-8A System Intercabling	23-6
24-1	Direction Finder Group AN/ARA-25 Component Locations	24-1
24-2	Direction Finder Group AN/ARA-25 Complete Functional Data Flow	24-2
24-3	Direction Finder Group AN/ARA-25 Cabling Diagram	24-3
24-4	Direction Finder Group AN/ARA-25 Power Distribution, Connection to Aircraft	24-4
24-5	Direction Finder Group AN/ARA-25 System Intercabling	24-5
25-1	Range Receiver Set Component Locations	25-1
25-2	Range Receiver Set Complete Functional Data Flow	25-2
25-3	Range Receiver Set Cabling Diagram	25-2
25-4	Range Receiver Set Power Distribution, Connection to Aircraft	25-3
25-5	Range Receiver Set System Intercabling	25-4
26-1	Radio Set AN/CRT-3 Components.	26-2
27-1	Radar Altimeter AN/APN-22 Component Locations	27-2
27-2	Radar Altimeter AN/APN-22 Complete Functional Data Flow	27-3
27-3	Radar Altimeter AN/APN-22 Cabling Diagram	27-4
27-4	Radar Altimeter AN/APN-22 Power Distribution Connection to Aircraft	27-5
27-5	Radar Altimeter AN/APN-22 System Intercabling	27-6
28-1	VHF Radio Set AN/ARC-73 and Related Equipment Component Locations	28-2
28-2	VHF Radio Set AN/ARC-73 and Related Equipment Complete Functional Data Flow	28-4
28-3	VHF Radio Set AN/ARC-73 and Related Equipment Cabling Diagram	28-9
28-4	VHF Radio Set AN/ARC-73 and Related Equipment Power Distribution Connection to Aircraft	28-10
28-5	VHF Radio Set AN/ARC-73 and Related Equipment System Intercabling	28-11
29-1	Doppler Radar Set AN/APN-501G Component Locations	29-2
29-2	Doppler Radar Set AN/APN-501G Complete Functional Data Flow	29-3
29-3	Doppler Radar Set AN/APN-501G Cabling Diagram	29-7
29-4	Doppler Radar Set AN/APN-501G Power Distribution Connection to Aircraft	29-8
29-5	Doppler Radar Set AN/APN-501G System Intercabling	29-9

INTRODUCTION

This technical manual is one in a series of 11 organizational (flight line) maintenance technical manuals for the HU-16A and HU-16B aircraft. The purpose of each technical manual in the series is to present, as clearly and concisely as possible, all the information required for organizational maintenance of the system to which it applies. In this manner, the specialist will be equipped with all the information he requires in one compact book and the necessity to cross-reference and read extraneous matter will be kept to a minimum. It may become necessary, during certain maintenance operations, to accomplish procedures that are within the scope of two or more technical manuals. When this occurs, the work should be referred to the appropriate systems mechanic. Following this introduction is a list of the HU-16A and HU-16B maintenance technical manuals in this series.

This technical manual contains instructions for organizational (flight line) maintenance of radio, communications, and navigation systems. The technical manual is divided into 29 sections and each section is divided, as applicable, into five main paragraphs. These paragraphs and their contents are described below. Variations in aircraft installations are generally confined to the inclusion or omission of particular systems. This technical manual provides information for all of the radio, communications, and navigation systems that may be installed in HU-16A and HU-16B aircraft.

Radar altimeter AN/APN-22, VHF radio set AN/ARC-73, and doppler radar set AN/APN-501G are installed only in HU-16B aircraft, USAF serial numbers 50-0176, 50-0181, 51-0002, 51-0005, 51-0033, and 51-0034. In these aircraft, direction finder group AN/ARA-25 is integrated with uhf radio set AN/ARC-27 and vhf radio set AN/ARC-73. Organizational maintenance for these systems is given in sections XXVII through XXIX of this technical manual.

DESCRIPTION AND LEADING PARTICULARS.

This paragraph contains a brief description of the system or equipment, including complete system or data flow and the contribution made thereto by mechanical, electrical, fluid, or other aspects.

OPERATIONAL CHECKOUT.

This paragraph provides instructions for a complete step-by-step operational checkout of the equipment or system which will indicate if the equipment or system meets its minimum operational standard.

SYSTEM ANALYSIS.

Isolation procedures for locating troubles and recommended remedial action are provided in this paragraph.

REMOVAL AND REPLACEMENT.

Instructions are provided in this paragraph for the removal and replacement, when the procedure is not obvious, of any component, accessory, assembly, subassembly, cabling, ETC, which can be removed from the aircraft as a unit by organizational maintenance personnel. Specific location in the aircraft is given when the location is not obvious.

ADJUSTMENT.

This paragraph provides step-by-step procedures for alignments or adjustments required that result from replacement of any component, accessory, assembly, subassembly, or plug-in unit. It also provides operating instructions for the more complicated equipment, to be used during system analysis procedures.

TCTO IDENTIFICATION

T.O. NO.	TITLE	DATE
1U-16(H)B-510	Installation of AM-3969 Preamplifier for ARA-25, HU-16B Series Aircraft	15 April 1965
1U-16(H)B-511	Installation of 51S-1B High Frequency Radio Receiver, HU-16B Series Aircraft	15 April 1965

LIST OF HU-16A AND HU-16B MAINTENANCE TECHNICAL MANUALS

Technical Order Number	Manual Title
T.O. 1U-16(H)A-2-1	GENERAL AIRCRAFT
T.O. 1U-16(H)A-2-2	GROUND HANDLING, SERVICING, AND AIRFRAME MAINTENANCE
T.O. 1U-16(H)A-2-3	PNEUDRAULICS
T.O. 1U-16(H)A-2-4	POWER PLANT
T.O. 1U-16(H)A-2-5	FUEL SYSTEM
T.O. 1U-16(H)A-2-6	LANDING GEAR
T.O. 1U-16(H)A-2-7	FLIGHT CONTROLS
T.O. 1U-16(H)A-2-8	INSTRUMENTS
T.O. 1U-16(H)A-2-9	ELECTRICAL SYSTEM
T.O. 1U-16(H)A-2-9D	ELECTRICAL SYSTEM (Modified in accordance with T.O. 1A-16(S)-568)
T.O. 1U-16(H)A-2-10	RADIO, COMMUNICATIONS, AND NAVIGATION SYSTEMS
T.O. 1U-16(H)A-2-11	WIRING DATA
T.O. 1U-16(H)A-2-11D	WIRING DATA (Modified in accordance with T.O. 1A-16(S)-568)

SECTION I

F-1 AUTOMATIC PILOT SYSTEM

1–1. DESCRIPTION AND LEADING PARTICULARS.

1–2. This section comprises maintenance instructions for the F-1 automatic pilot (autopilot) system installed in SA-16A and SA-16B aircraft. (See figure 1–1.) The system is an integrated electromechanical and electronic flight control system that can be used in conjunction with the N-1 compass system as a navigational aid. Components of the autopilot system include the turn and pitch control, autopilot switch, gyro-fluxgate transmitter, master directional indicator, gyro-fluxgate amplifier, attitude indicator, turn and slip indicator, multichannel amplifier, amplifier adapter, servo assembly, power junction box, emergency disconnect, repeater indicators, and clutch switch. The gyro-fluxgate transmitter is removed from aircraft in which the autopilot and N-1 compass systems are used in conjunction.

1–3. The autopilot system contains three control channels, one for each of the aircraft's three axes. Error signals are developed by the autosyns in the gyroscope controls when the aircraft deviates from its preset attitude or course. These error signals are amplified, and sent to servos which control the rudder, ailerons, and elevators. The servos move the control surfaces a correct amount to return the aircraft to its original attitude. As the aircraft reaches this attitude, the error signal decreases to zero. Figure 1–2 illustrates complete system data flow.

1–4. TURN AND PITCH CONTROL. (See figure 1–3.) The turn and pitch control contains three controls: turn control, pitch-trim control, and the bank-trim control. The pitch-trim control is provided with an indicator consisting of a rotating disk with an index mark. The control is located on the aft face of the pedestal.

1–5. AUTOPILOT SWITCH. (See figure 1–3.) The autopilot switch is a two-position switch located on the aft face of the pedestal, which controls A-C power to the autopilot servo amplifier. This switch does not affect the A-C power to the autopilot instruments.

1–6. GYRO-FLUXGATE TRANSMITTER. (See figure 1–3.) The gyro-fluxgate transmitter consists essentially of a vertical gyro, erected by ball-type erection system, and a fluxgate assembly. The fluxgate assembly generates signals that represent the heading of the aircraft. To operate accurately, the fluxgate assembly must be kept parallel to the horizontal component of the magnetic field of the earth. The vertical gyro provides the means for accomplishing this. The gyro-fluxgate transmitter is located in the tail compartment aft of station 568.

1–7. MASTER DIRECTIONAL INDICATOR. (See figure 1–3.) The master directional indicator consists essentially of a motor and a follow-up autosyn geared to a dial and a compensator assembly. These components furnish a visual indication of the heading of the aircraft. The indicator also includes a course autosyn which is coupled to the shaft of the follow-up autosyn, a transmitting magnesyn, and a transmitting autosyn. The course autosyn provides the signals representing aircraft deviation from the reference heading. The transmitting autosyn and the magnesyn transmit signals representing aircraft magnetic heading to the repeater indicators. The master directional indicator is located on the pilot's instrument panel.

1–8. GYRO-FLUXGATE AMPLIFIER. (See figure 1–3.) The gyro-fluxgate amplifier supplies the 487.5-cycle excitation voltage to the fluxgate of the gyro-fluxgate transmitter and amplifies the signals generated in this unit. The amplified signals run the low inertia motor of the master directional indicator. The amplifier is located in the tail compartment aft of station 568.

1–9. ATTITUDE INDICATOR. (See figure 1–3.) The attitude indicator consists essentially of a universally mounted gyro, a pitch autosyn, a bank autosyn, and a caging device. The attitude indicator developes autosyn signals which represent the direction and magnitude of the amount of pitch and the amount of roll of the aircraft and gives visual indication of these maneuvers. An attitude indicator is located on the pilot's and copilot's panels.

1–10. TURN AND SLIP INDICATOR. (See figure 1–3.) The turn and slip indicator consists of a gyro mounted with the spin axis in a lateral direction, a set of centering springs, an autosyn, and a dial with a pointer and ball-type inclinometer. The turn and slip indicator originates autosyn signals which represent the direction and the rate at which the aircraft is turning. These signals are used by the yaw channel of the multichannel amplifier to keep the aircraft stable in this channel. The turn and slip indicator

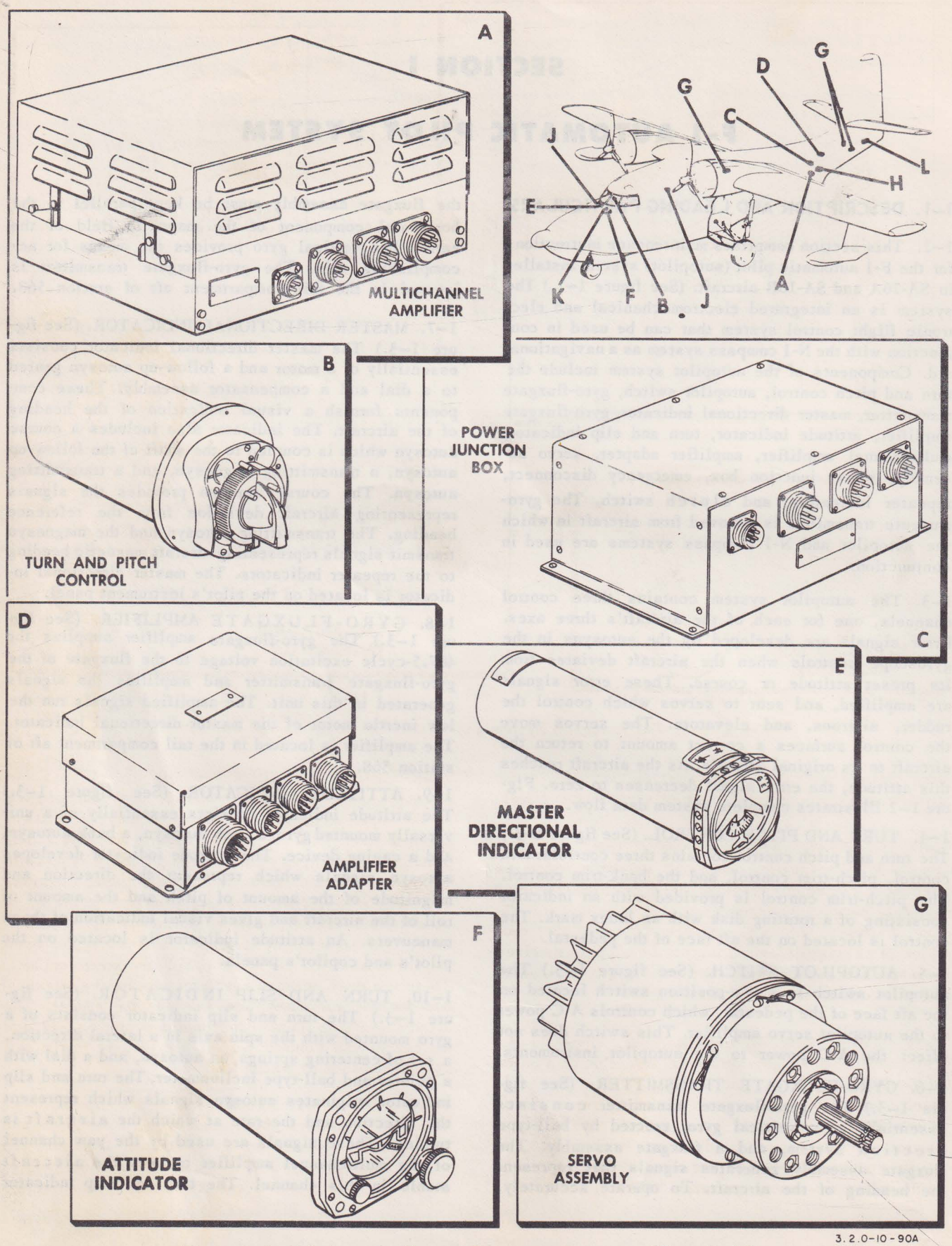

Figure 1–1. F-1 Autopilot System Component Locations (Sheet 1 of 2)

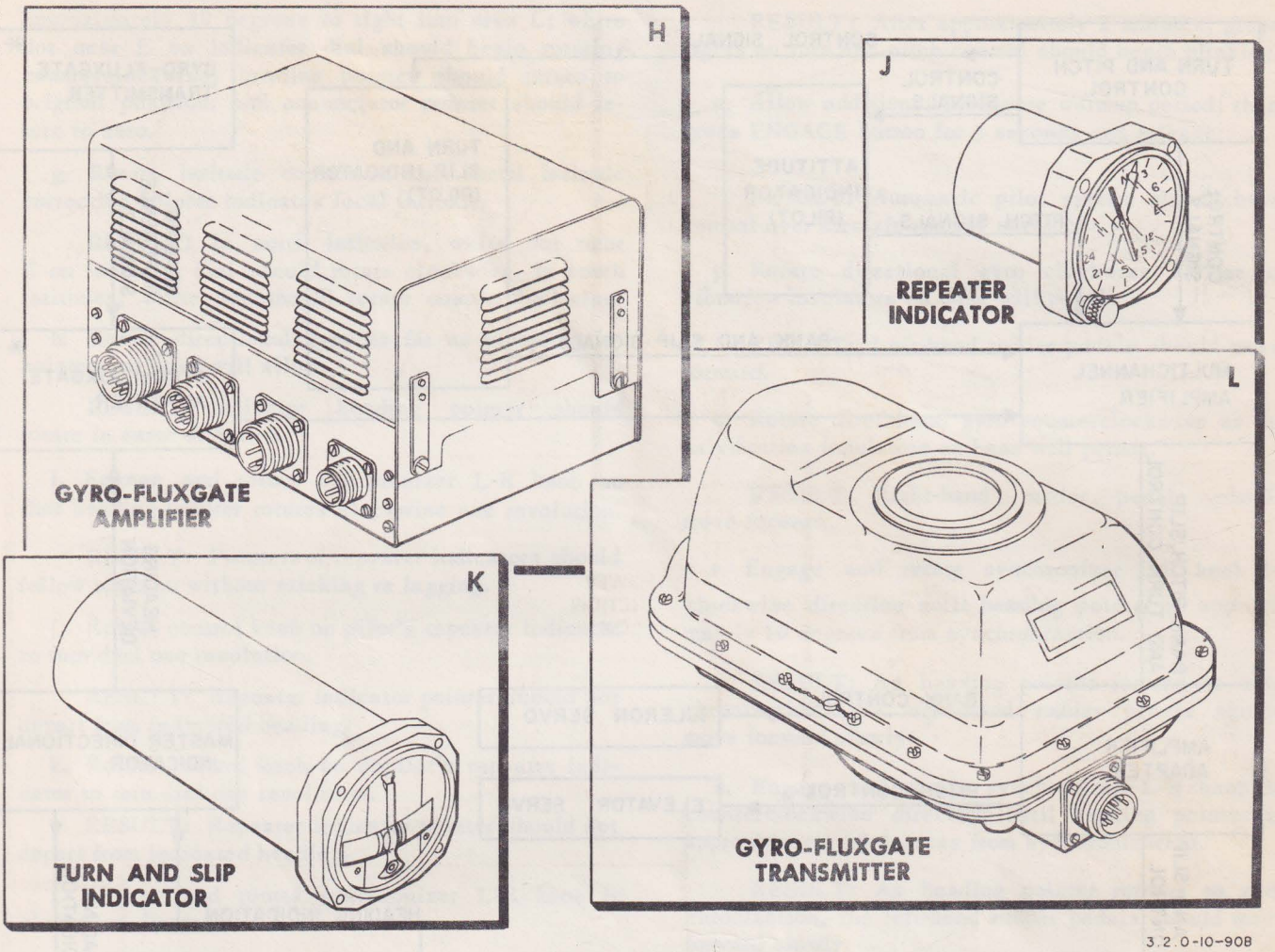

Figure 1–1. F-1 Autopilot System Component Locations (Sheet 2 of 2)

also gives a visual indication of the attitude of the aircraft and is located on the pilot's instrument panel.

1–11. MULTICHANNEL AMPLIFIER. (See figure 1–3.) The multichannel amplifier contains electrical circuit elements of three control channels, a power supply, and remote-operating relays of the control surface servo assemblies. The amplifier provides three stages of amplification for signals received from the autosyn circuits. The amplifier is located in the tail compartment aft of station 568.

1–12. AMPLIFIER ADAPTER. (See figure 1–3.) The amplifier adapter controls the direction of rotation of the rudder, aileron, and elevator servos, the angle through which the output shaft of each of these servos moves in response to a given signal, and the proportion of rate signal to direction deviation signal for the rudder channel. The amplifier adapter is located in the tail compartment at station 568.

1–13. SERVO ASSEMBLY. (See figure 1–3.) A servo assembly (servo) is used to control movement of each of the main control surfaces in response to control signals sent from the multichannel amplifier. The principal components of the assembly are a reversible D-C motor, clutch, gear train, cable drum, engaging solenoid, and a potentiometer. The potentiometer is used to balance the autosyn circuit after the servo motor has made a correction. Limit switches open the servo motor circuit when travel limits are reached. There are three servo assemblies; one for the ailerons, one for the elevators, and one for the rudder. The aileron servo is located at fuselage station 332 and the rudder and elevator servos are located in the tail compartment aft of station 637.

1–14. POWER JUNCTION BOX. (See figure 1–3.) The power junction box interconnects the A-C and D-C power supplies, the gyro-fluxgate amplifier, the servo amplifier, and the control junction box. A three-phase, step-down transformer 115 to 26 volts,

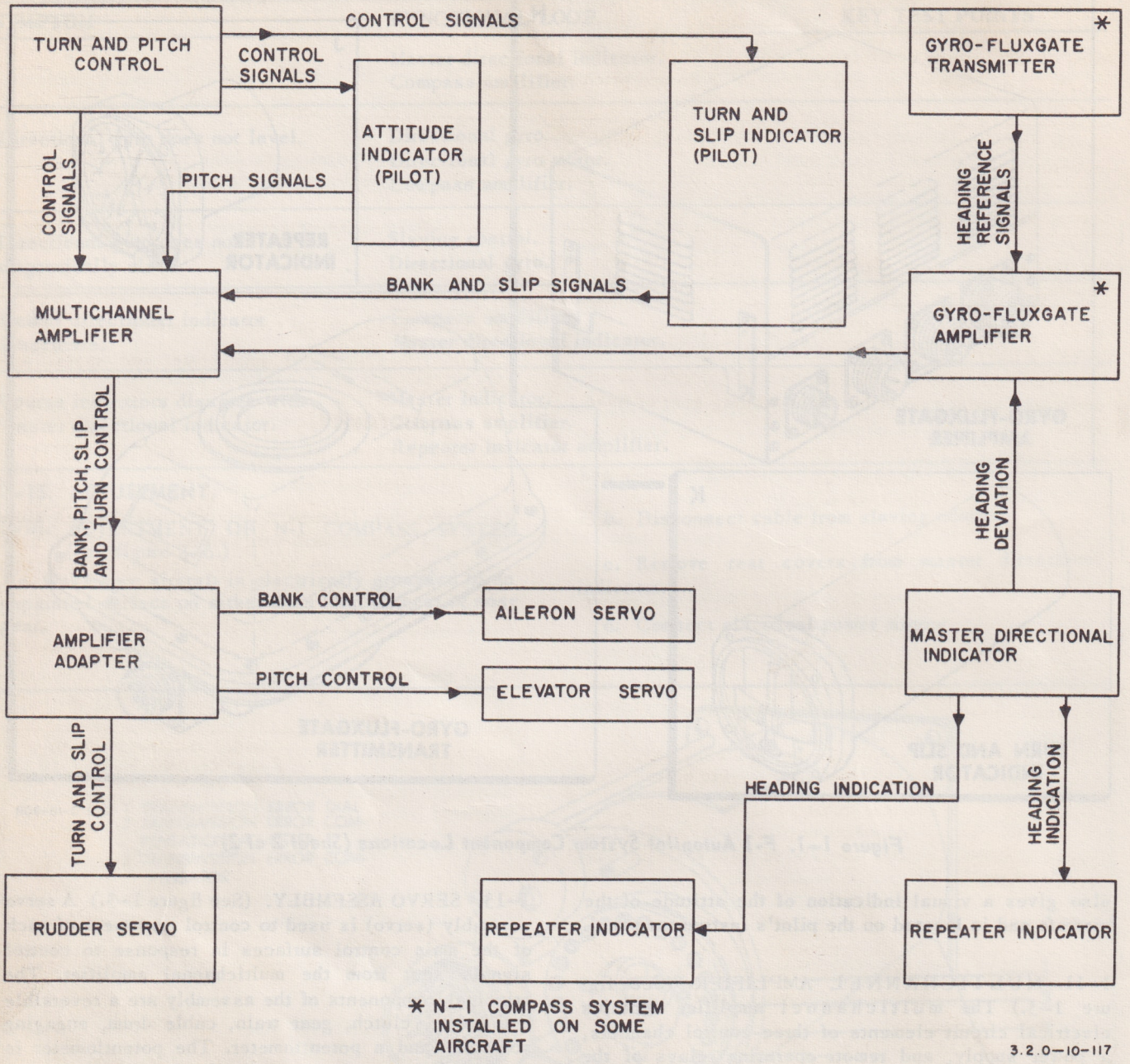

Figure 1-2. F-1 Autopilot System Complete Functional Data Flow

and a three-pole relay are housed in the power junction box. A switch controls power for the relay. Three-phase, 400 cycle, 115-volt AC, and 26 to 28-volt D-C power is supplied to the junction box. The power junction box is located in the tail compartment at station 568.

1-15. EMERGENCY DISCONNECT. A system of cables and levers is arranged so the servos will disconnect when the emergency disconnect handle, on the overhead control panel, is pulled. This is accomplished at each servo as follows: When the cable is pulled out against the loading spring, it withdraws two driving pins from the pulley hub, the inner hub is free to turn independently of the outer hub. Two latches hold the yoke in the disengaged position until it is manually reset. (Refer to paragraph 1-28.)

1-16. REPEATER INDICATOR. (See figure 1-3.) The repeater indicators duplicate the master directional indicator reading and provide an accurate indication of the azimuth reading. The repeater indicators are located, one on the copilot's instrument panel and one on the radar-navigator's panel.

1-17. CLUTCH SWITCH. (See figure 1-3.) All clutches in the automatic pilot system are engaged and disengaged, electrically, by means of a clutch switch. The switch is held in the on position by a solenoid. When the solenoid is de-energized, a spring

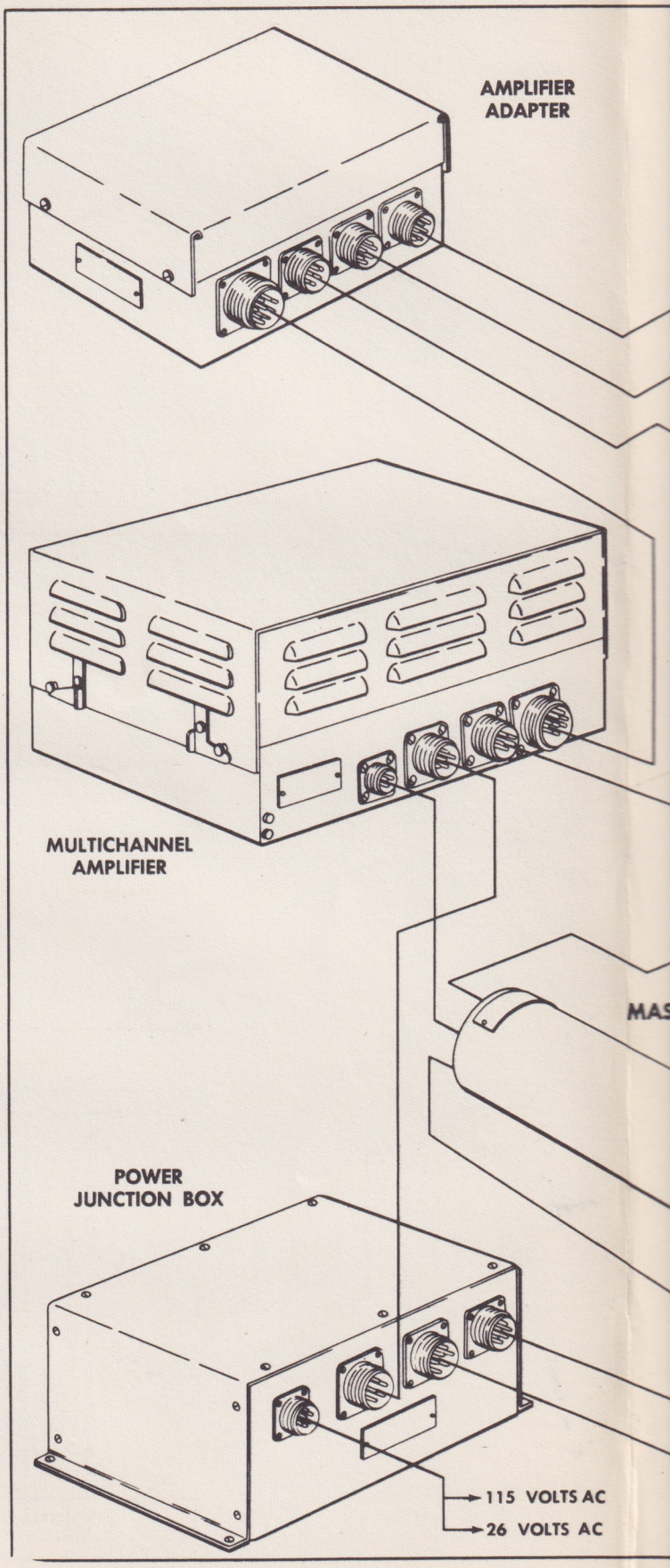

Figure 1–3. F-1 Autopilot Syst

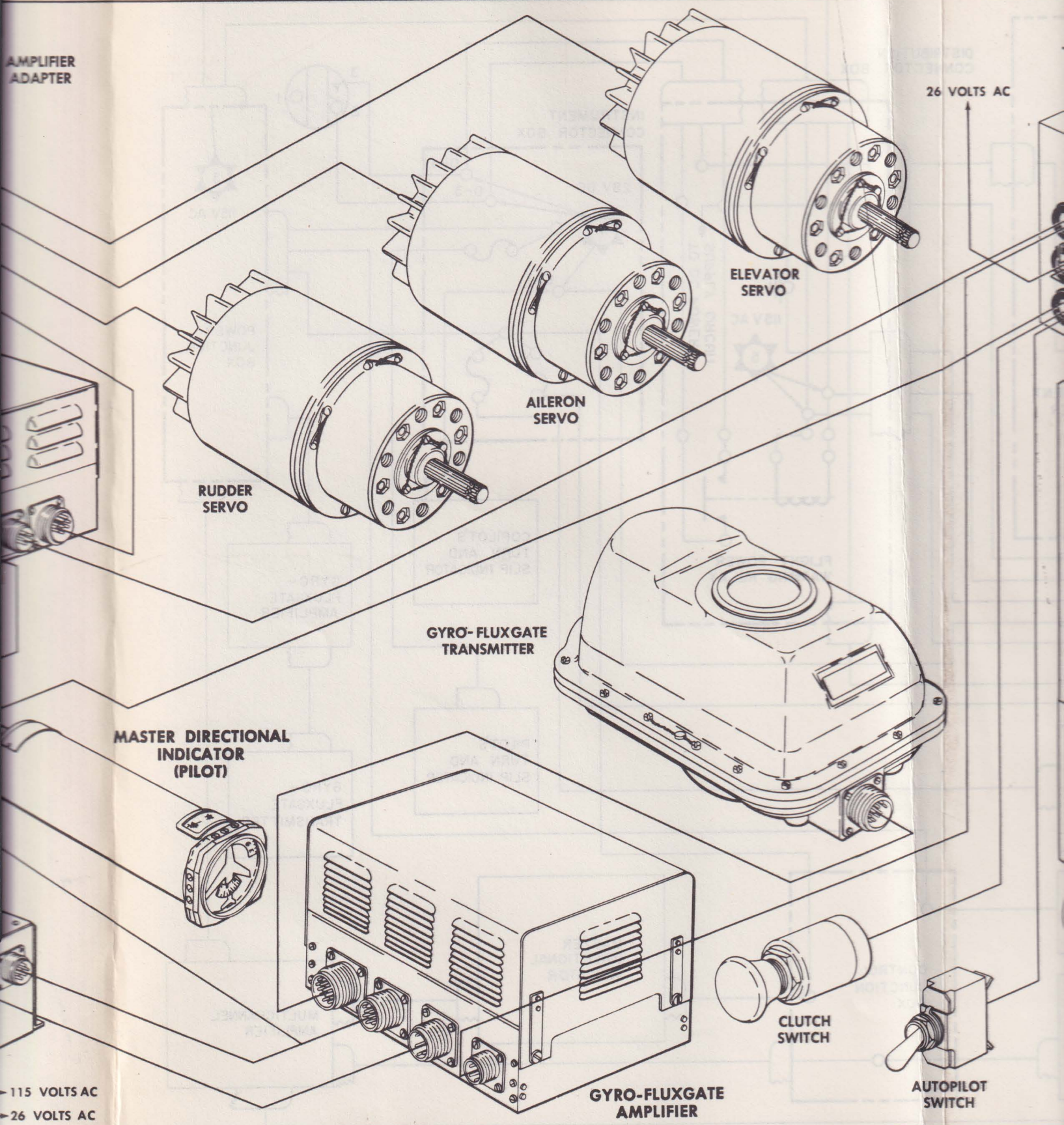

F-1 Autopilot System Cabling Diagram

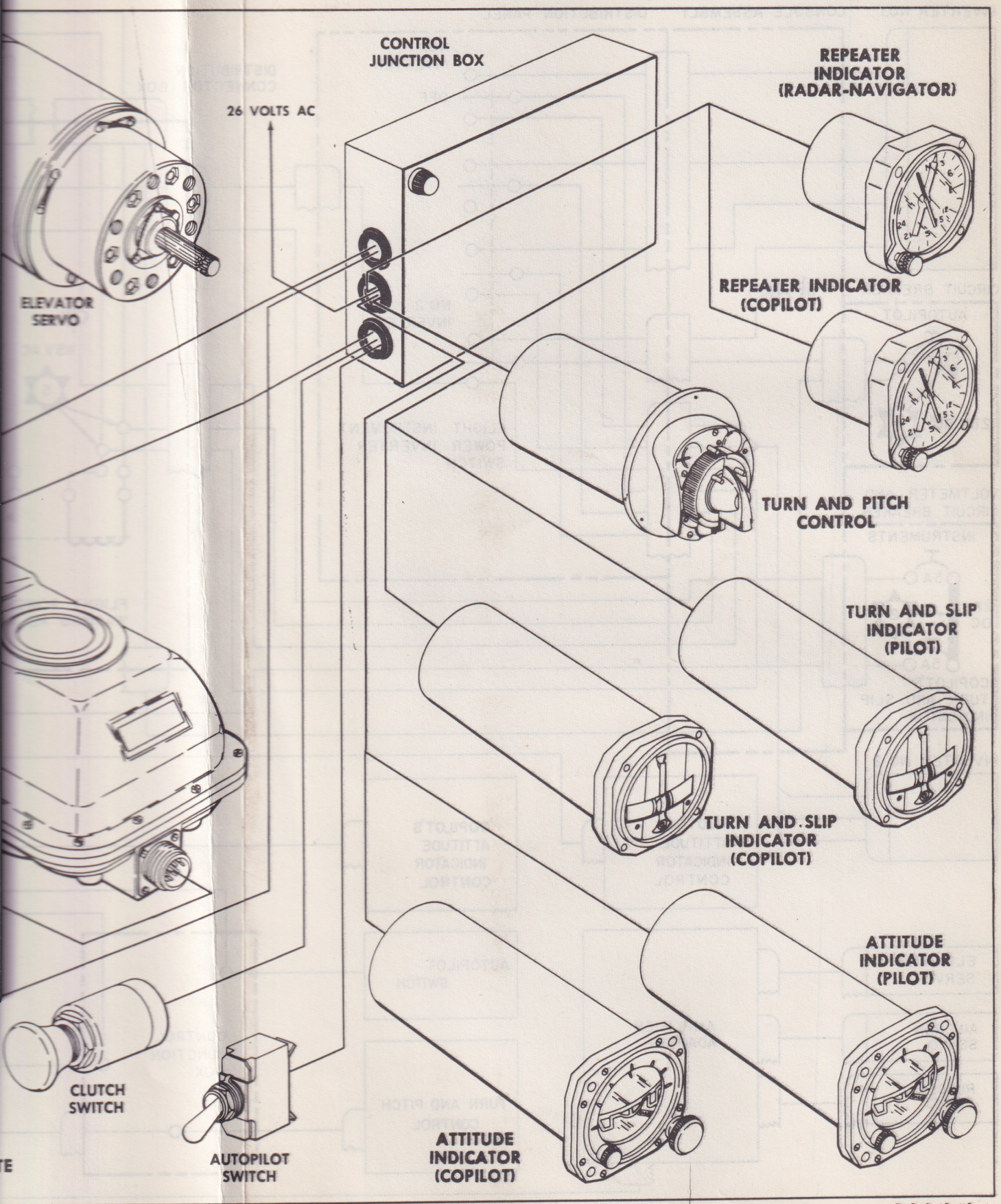
CONTROL
JUNCTION BOX
26 VOLTS AC
REPEATER
INDICATOR
(RADAR-NAVIGATOR)
ELEVATOR
SERVO
REPEATER INDICATOR
(COPILOT)
TURN AND PITCH
CONTROL
TURN AND SLIP
INDICATOR
(PILOT)
TURN AND SLIP
INDICATOR
(COPILOT)
ATTITUDE
INDICATOR
(PILOT)
CLUTCH
SWITCH
AUTOPILOT
SWITCH
ATTITUDE
INDICATOR
(COPILOT)

3.2.0-10-110

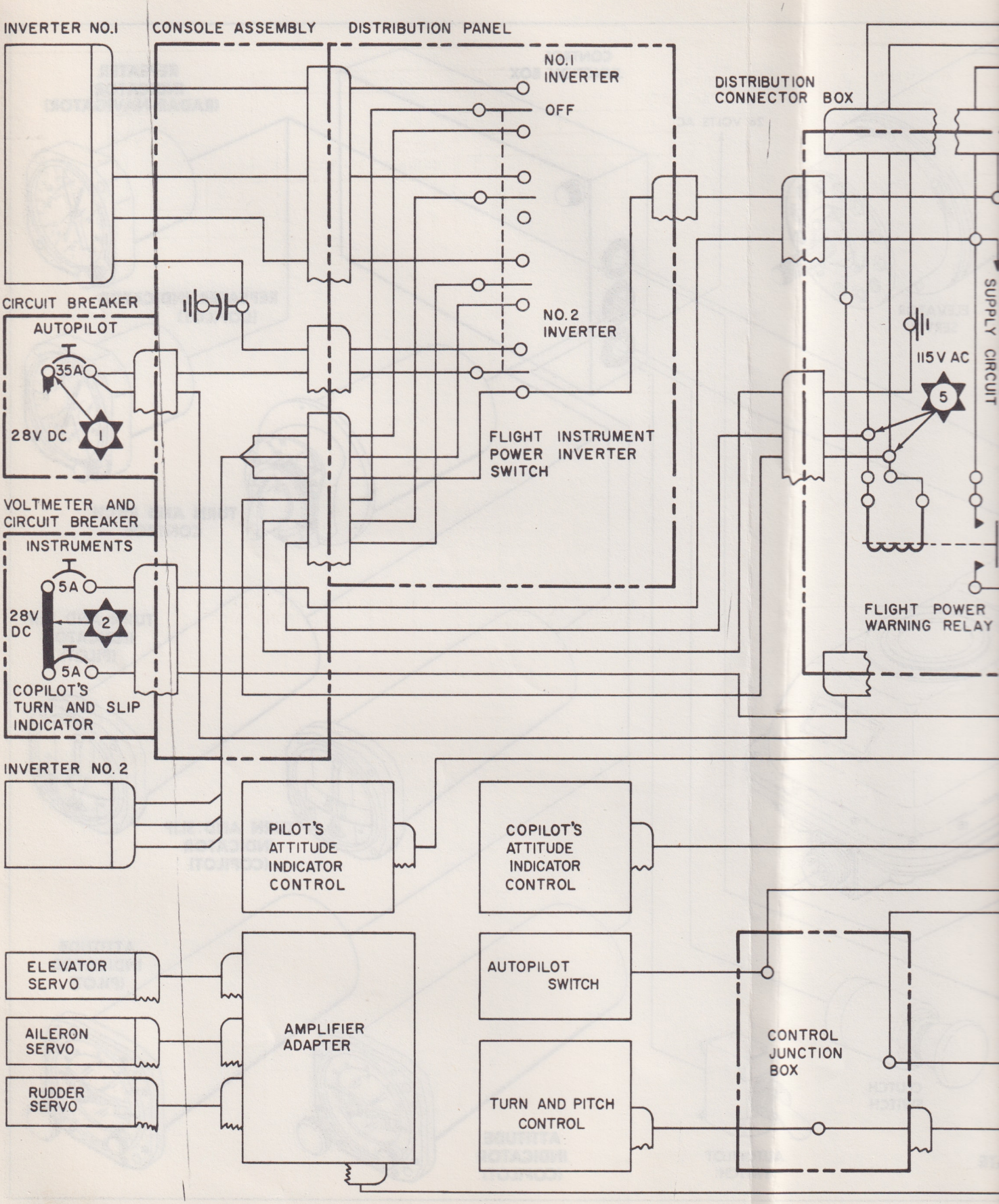

Figure 1–4. F-1 Autopil

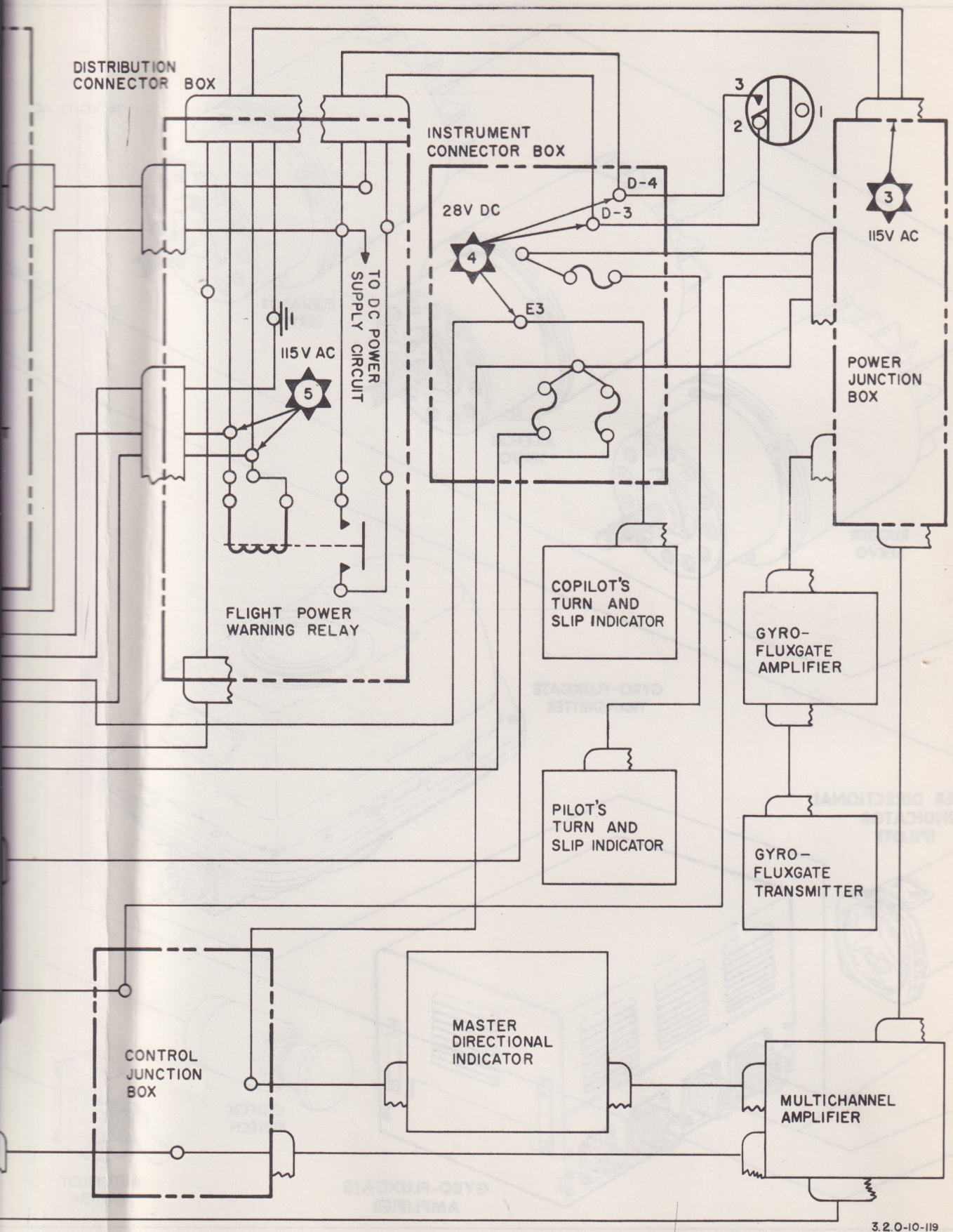

Figure 1–4. F-1 Autopilot System Power Distribution, Connection to Aircraft

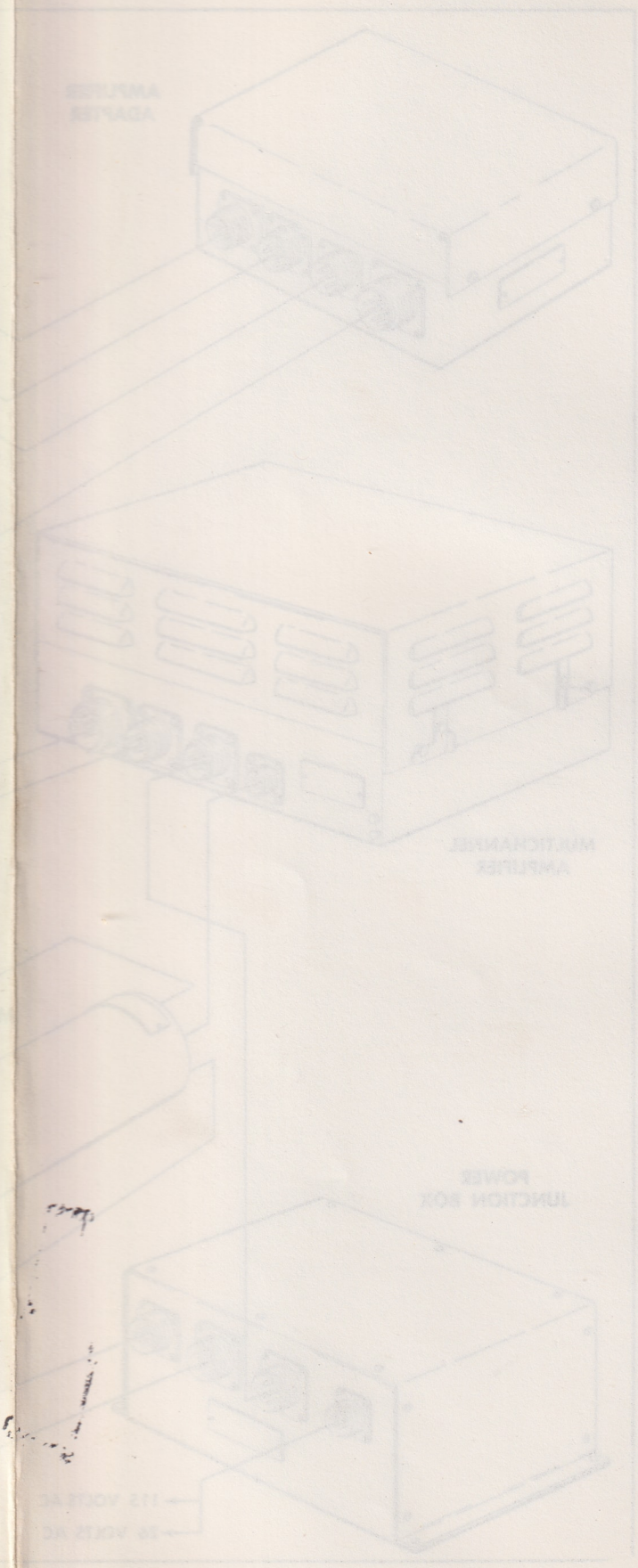

E
S
+
AUTOPILO
CLUTCH S
AUTOPIL
TURN AN
CONT
F67C16

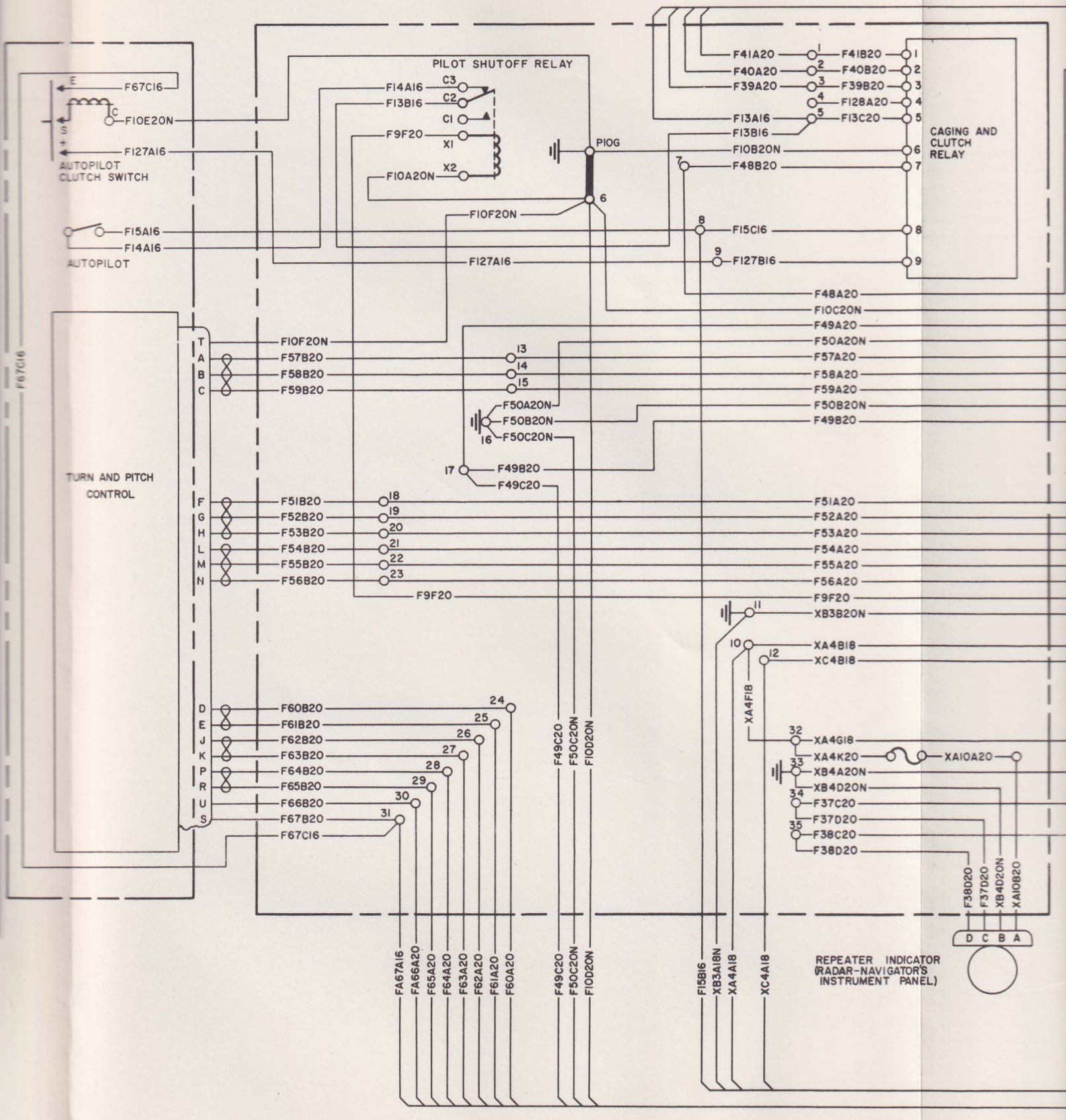

Figure 1–5. F-1 Autopilot System Intercabling Used With N-1 Compass System

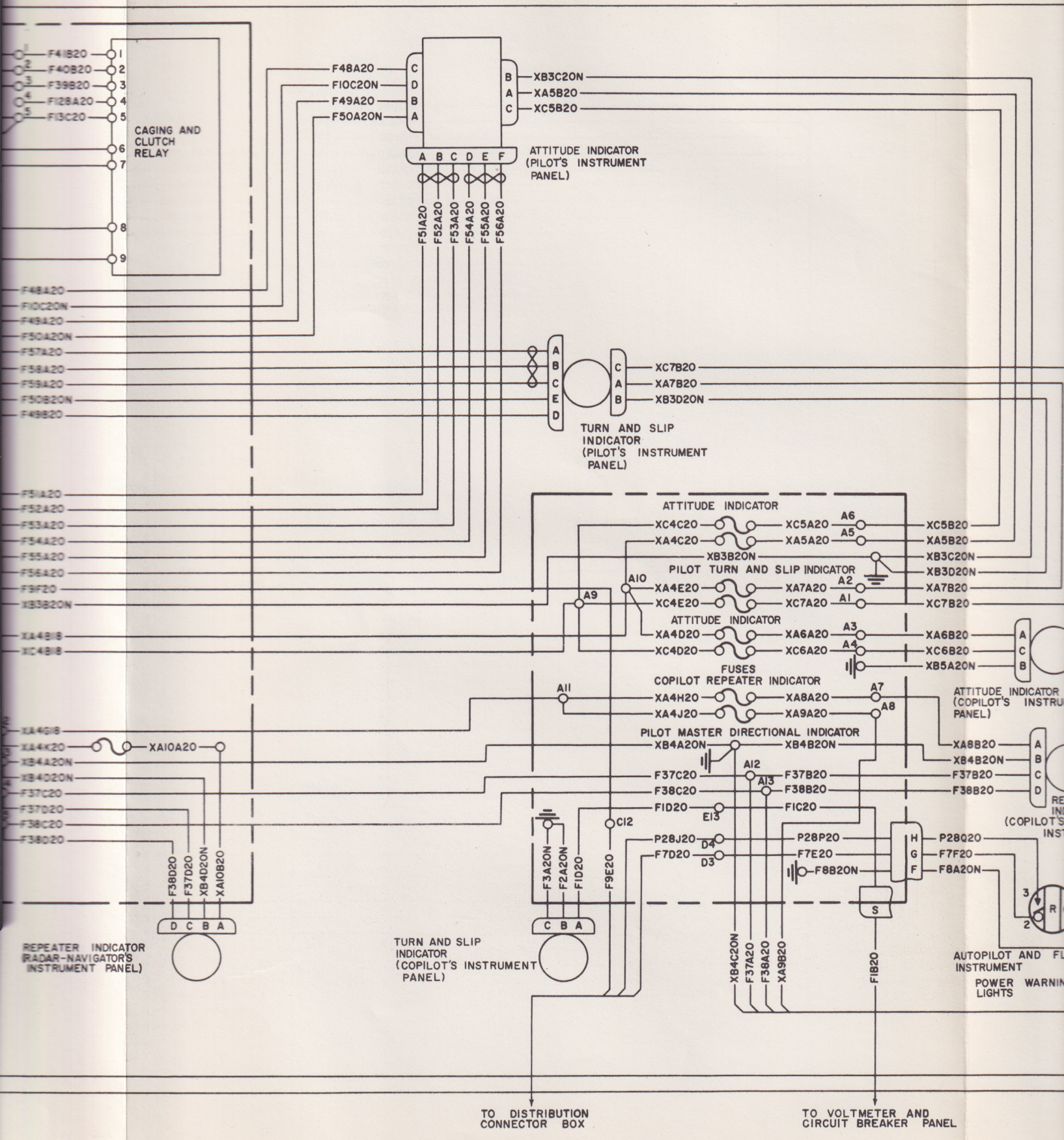
F41B20
F40B20
F39B20
F128A20
F13C20
CAGING AND CLUTCH RELAY
F48A20
F10C20N
F49A20
F50A20N
XB3C20N
XA5B20
XC5B20
ATTITUDE INDICATOR (PILOT'S INSTRUMENT PANEL)
F51A20
F52A20
F53A20
F54A20
F55A20
F56A20
F57A20
F58A20
F59A20
F50B20N
F49B20
XC7B20
XA7B20
XB3D20N
TURN AND SLIP INDICATOR (PILOT'S INSTRUMENT PANEL)
F9F20
XB3B20N
XA4B18
XC4B18
ATTITUDE INDICATOR
XC4C20
XC5A20
XA4C20
XA5A20
XB3B20N
PILOT TURN AND SLIP INDICATOR
XA4E20
XA7A20
XC4E20
XC7A20
XA4D20
XA6A20
XC4D20
XC6A20
FUSES
XA6B20
XC6B20
XB5A20N
ATTITUDE INDICATOR (COPILOT'S INSTRUMENT PANEL)
COPILOT REPEATER INDICATOR
XA4H20
XA8A20
XA4J20
XA9A20
PILOT MASTER DIRECTIONAL INDICATOR
XB4A20N
XB4B20N
XA8B20
XB4B20N
F37B20
F38B20
XA4G18
XA4K20
XA10A20
XB4A20N
XB4D20N
F37C20
F38C20
F37D20
F38C20
F38D20
F37C20
F38C20
F1D20
F1C20
P28J20
P28P20
P28Q20
F7D20
F7E20
F7F20
F8B20N
F8A20N
F38D20
F37D20
XB4D20N
XA10B20
F3A20N
F2A20N
F1D20
F9E20
XB4C20N
F37A20
F38A20
XA9B20
F1B20
REPEATER INDICATOR (RADAR-NAVIGATOR'S INSTRUMENT PANEL)
TURN AND SLIP INDICATOR (COPILOT'S INSTRUMENT PANEL)
AUTOPILOT AND FL
INSTRUMENT
POWER WARNIN
LIGHTS
TO DISTRIBUTION CONNECTOR BOX
TO VOLTMETER AND CIRCUIT BREAKER PANEL

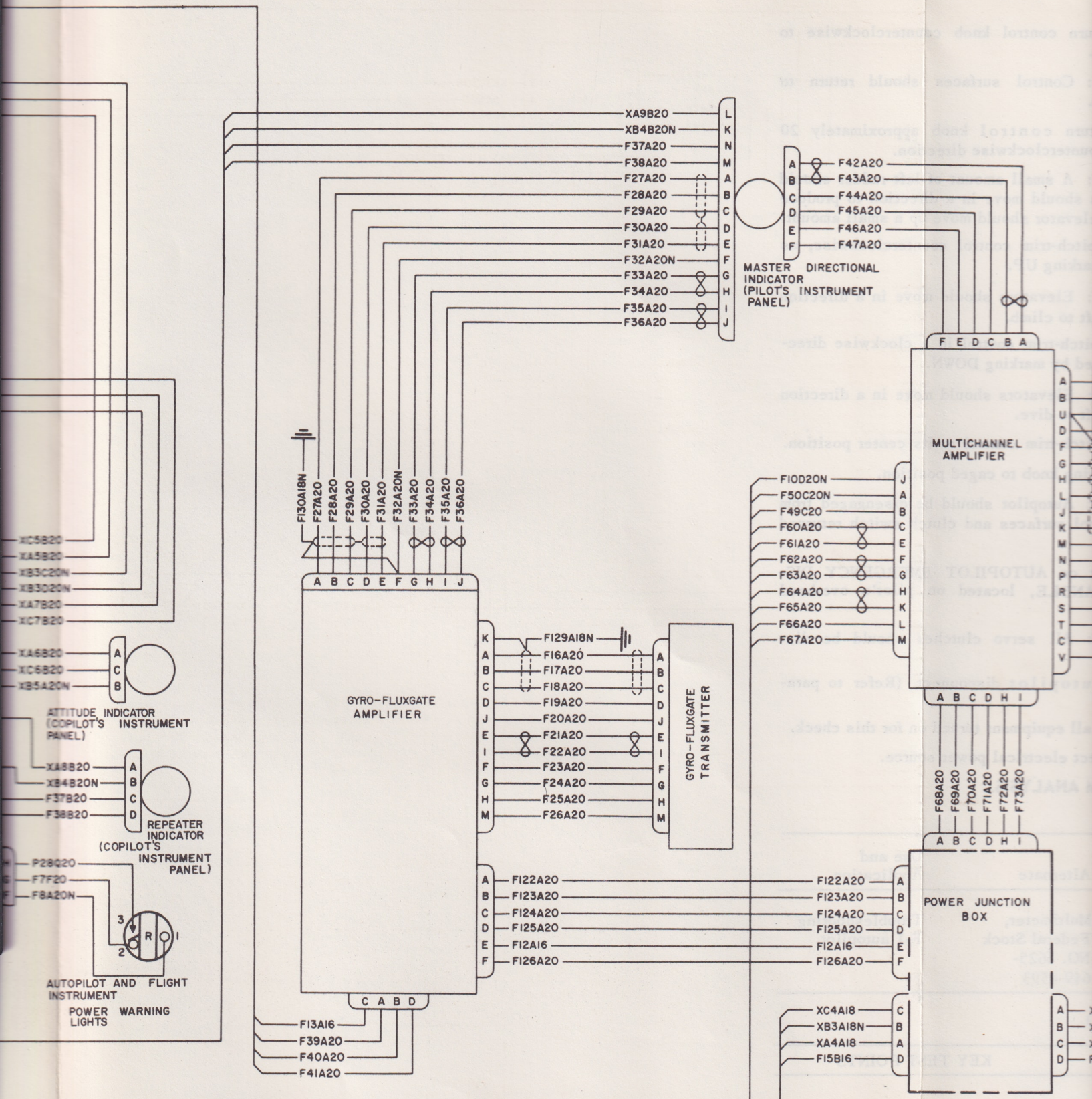
XA9B20
XB4B20N
F37A20
F38A20
F27A20
F28A20
F29A20
F30A20
F31A20
F32A20N
F33A20
F34A20
F35A20
F36A20
MASTER DIRECTIONAL INDICATOR (PILOT'S INSTRUMENT PANEL)
F42A20
F43A20
F44A20
F45A20
F46A20
F47A20
MULTICHANNEL AMPLIFIER
F130A18N
GYRO-FLUXGATE AMPLIFIER
F129A18N
F16A20
F17A20
F18A20
F19A20
F20A20
F21A20
F22A20
F23A20
F24A20
F25A20
F26A20
GYRO-FLUXGATE TRANSMITTER
F122A20
F123A20
F124A20
F125A20
F12A16
F126A20
POWER JUNCTION BOX
F13A16
F39A20
F40A20
F41A20
XC5B20
XA5B20
XB3C20N
XB3D20N
XA7B20
XC7B20
XA6B20
XC6B20
XB5A20N
ATTITUDE INDICATOR (COPILOT'S INSTRUMENT PANEL)
XA8B20
XB4B20N
F37B20
F38B20
REPEATER INDICATOR (COPILOT'S INSTRUMENT PANEL)
P28Q20
F7F20
F8A20N
AUTOPILOT AND FLIGHT INSTRUMENT
POWER WARNING LIGHTS
F10D20N
F50C20N
F49C20
F60A20
F61A20
F62A20
F63A20
F64A20
F65A20
F66A20
F67A20
F68A20
F69A20
F70A20
F71A20
F72A20
F73A20
XC4A18
XB3A18N
XA4A18
F15B16

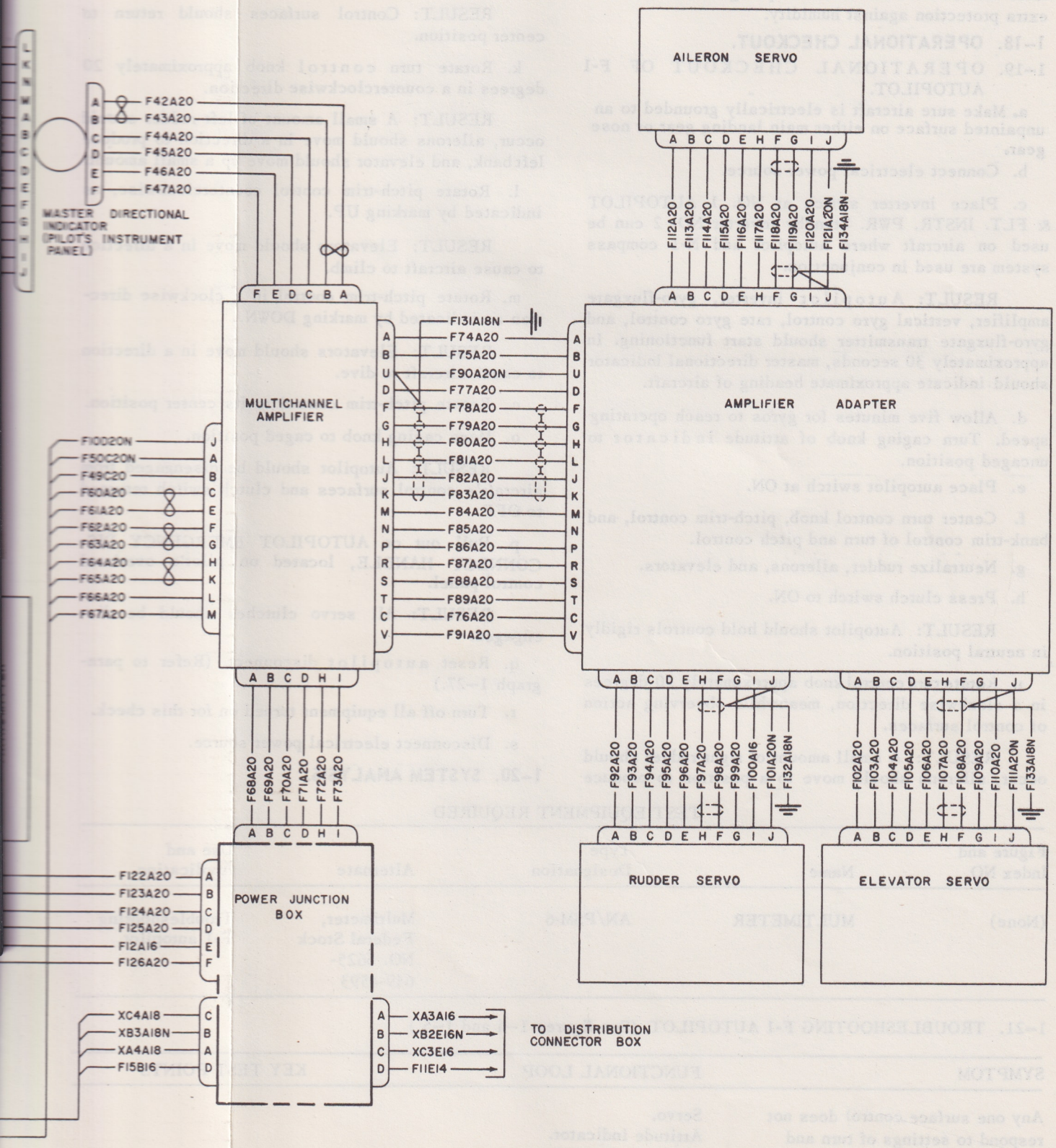
AILERON SERVO
A B C D E H F G I J
F112A20
F113A20
F114A20
F115A20
F116A20
F117A20
F118A20
F119A20
F120A20
F121A20N
F134AI8N
MASTER DIRECTIONAL INDICATOR (PILOT'S INSTRUMENT PANEL)
F42A20
F43A20
F44A20
F45A20
F46A20
F47A20
F E D C B A
MULTICHANNEL AMPLIFIER
F131AI8N
F74A20
F75A20
F90A20N
F77A20
F78A20
F79A20
F80A20
F81A20
F82A20
F83A20
F84A20
F85A20
F86A20
F87A20
F88A20
F89A20
F76A20
F91A20
AMPLIFIER ADAPTER
F100D2ON
F50C20N
F49C20
F60A20
F61A20
F62A20
F63A20
F64A20
F65A20
F66A20
F67A20
A B C D H I
F68A20
F69A20
F70A20
F71A20
F72A20
F73A20
F92A20
F93A20
F94A20
F95A20
F96A20
F97A20
F98A20
F99A20
F100AI6
F101A20N
F132AI8N
F102A20
F103A20
F104A20
F105A20
F106A20
F107A20
F108A20
F109A20
F110A20
F111A20N
F133AI8N
RUDDER SERVO
ELEVATOR SERVO
POWER JUNCTION BOX
F122A20
F123A20
F124A20
F125A20
F12AI6
F126A20
XC4AI8
XB3AI8N
XA4AI8
F15BI6
XA3AI6
XB2EI6N
XC3EI6
F11EI4
TO DISTRIBUTION CONNECTOR BOX

in the switch immediately returns to the off position. The various types of clutch switches are similar except for knob design and knob travel and also that later models have a boot on the plunger shaft to afford extra protection against humidity.

1-18. OPERATIONAL CHECKOUT.

1-19. OPERATIONAL CHECKOUT OF F-1 AUTOPILOT.

a. Make sure aircraft is electrically grounded to an unpainted surface on either main landing gear or nose gear.

b. Connect electrical power source.

c. Place inverter switch at NO. 1 AUTOPILOT & FLT. INSTR. PWR. Standby inverter NO. 2 can be used on aircraft where autopilot and N-1 compass system are used in conjunction.

RESULT: Autopilot inverter, gyro-fluxgate amplifier, vertical gyro control, rate gyro control, and gyro-fluxgate transmitter should start functioning. In approximately 30 seconds, master directional indicator should indicate approximate heading of aircraft.

d. Allow five minutes for gyros to reach operating speed. Turn caging knob of attitude indicator to uncaged position.

e. Place autopilot switch at ON.

f. Center turn control knob, pitch-trim control, and bank-trim control of turn and pitch control.

g. Neutralize rudder, ailerons, and elevators.

h. Press clutch switch to ON.

RESULT: Autopilot should hold controls rigidly in neutral position.

i. Rotate turn control knob approximately 20 degrees in a clockwise direction, meanwhile observing action of control surfaces.

RESULT: A small amount of right rudder should occur, ailerons should move to a position to produce right bank, and a small amount of up elevator should be observed.

j. Rotate turn control knob counterclockwise to center position.

RESULT: Control surfaces should return to center position.

k. Rotate turn control knob approximately 20 degrees in a counterclockwise direction.

RESULT: A small amount of left rudder should occur, ailerons should move in a direction to produce left bank, and elevator should move up a small amount.

l. Rotate pitch-trim control counterclockwise, as indicated by marking UP.

RESULT: Elevators should move in a direction to cause aircraft to climb.

m. Rotate pitch-trim control in a clockwise direction as indicated by marking DOWN.

RESULT: Elevators should move in a direction to cause aircraft to dive.

n. Rotate pitch-trim control to its center position.

o. Move caging knob to caged position.

RESULT: Autopilot should be disengaged from aircraft's control surfaces and clutch switch returned to OFF.

p. Pull out on AUTOPILOT EMERGENCY DISCONNECT HANDLE, located on pilot's overhead control panel.

RESULT: All servo clutches should be disengaged.

q. Reset autopilot disconnect. (Refer to paragraph 1-27.)

r. Turn off all equipment turned on for this check.

s. Disconnect electrical power source.

1-20. SYSTEM ANALYSIS.

TEST EQUIPMENT REQUIRED

Figure and Index NO.	Name	Type Designation	Alternate	Use and Application
(None)	MULTIMETER	AN/PSM-6	Multimeter, Federal Stock NO. 6625-649-4593	Troubleshooting F-1 autopilot.

1-21. TROUBLESHOOTING F-1 AUTOPILOT. (See figures 1-4 and 1-5.)

SYMPTOM	FUNCTIONAL LOOP	KEY TEST POINTS
Any one surface control does not respond to settings of turn and pitch control.	Servo. Attitude indicator. Turn and slip indicator.	

SYMPTOM	FUNCTIONAL LOOP	KEY TEST POINTS
None of the surface controls respond to setting of the turn and pitch control.	Multichannel amplifier. Turn and pitch control.	
Master directional indicator inoperative.	Gyro-fluxgate amplifier.	
Servos will not engage.	Clutch switch.	
Aircraft will not maintain compass heading.	Gyro-fluxgate amplifier. Gyro-fluxgate transmitter.	

1-22. REMOVAL AND REPLACEMENT.

1-23. REMOVAL OF SERVO ASSEMBLY.

a. Make sure aircraft is electrically grounded to an unpainted surface on either main landing gear or nose gear.

b. Disconnect electrical power source.

c. Disconnect turnbuckle in chain or cable and remove chain or cable from servo.

d. Pinch together two tabs on side of disconnect unit.

e. Disconnect electrical cable at servo.

f. Position chain or cable on servo and connect turnbuckle. Adjust cable to proper tension.

1-24. REPLACEMENT OF SERVO ASSEMBLY.

a. Make sure aircraft is electrically grounded to an unpainted surface on either main landing gear or nose gear.

b. Disconnect electrical power source.

c. Position servo and install securing bolts.

d. Connect electrical cable to servo.

e. Position disconnect unit on servo shaft and press outward on tabs on side of unit to reset emergency disconnect.

Note

Rudder servo cables should be adjusted to 40 ± 10 pounds. Elevator servo cables should be adjusted to 60 ± 5 – 10 pounds. Aileron servo should be adjusted to prevent excessive friction.

1-25. REMOVAL OF TURN AND PITCH CONTROL.

a. Make sure aircraft is electrically grounded to an unpainted surface on either main landing gear or nose gear.

b. Disconnect electrical power source.

c. Remove pedestal nameplate by removing attaching screws.

d. Disconnect electrical plug at rear of control.

e. Remove attaching screws and remove control.

1-26. REPLACEMENT OF TURN AND PITCH CONTROL.

a. Make sure aircraft is electrically grounded to an unpainted surface on either main landing gear or nose gear.

b. Disconnect electrical power source.

c. Position controller and install attaching screws.

d. Connect electrical cable to control.

e. Position pedestal nameplate and install attaching screws.

1-27. ADJUSTMENT.

1-28. RESETTING EMERGENCY DISCONNECT. (See figure 1-6.)

a. Press two latches which protrude through slots on face of drum toward circumference of drum. Yoke will be released and forced by loading spring into its engaged position.

b. Rotate other drum until pins drop into holes provided for them. Inner and outer hubs will then be locked together.

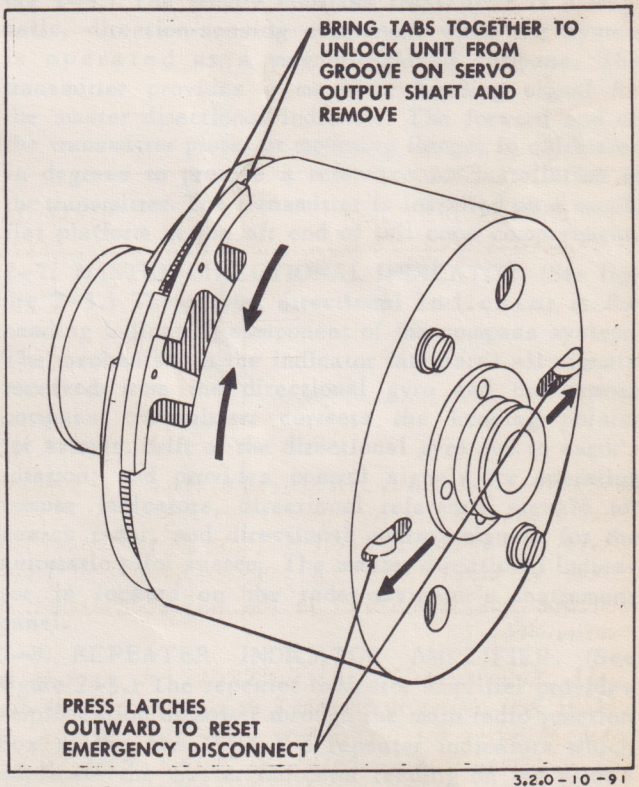

Figure 1-6. Resetting F-1 Autopilot Emergency Disconnect

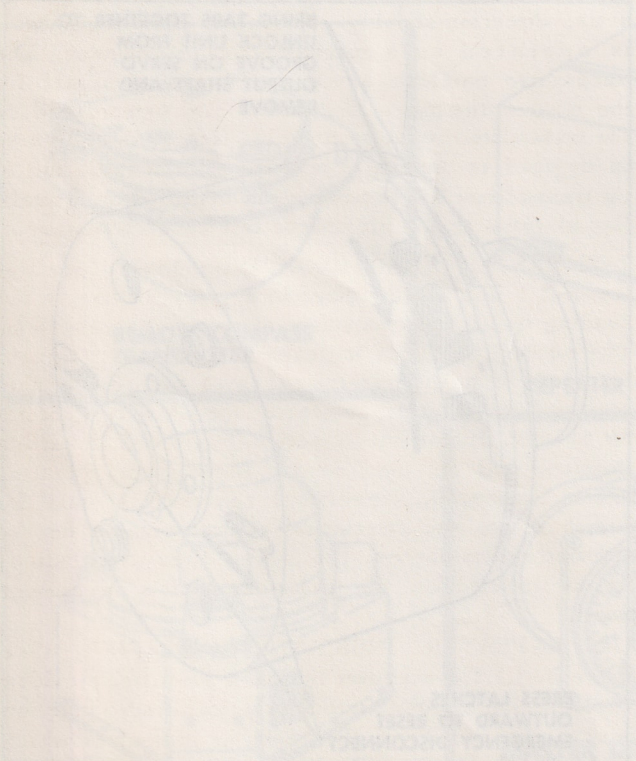

SECTION II

N-1 COMPASS SYSTEM

2-1. DESCRIPTION AND LEADING PARTICULARS.

2-2. This section comprises maintenance instructions for the N-1 compass system installed on SA-16A and SA-16B aircraft. (See figure 2-1.) The compass system is a magnetic-slaved, directional gyro, stabilized compass system. The system provides visual indications of the aircraft's azimuth heading and azimuth control signal to the automatic pilot system. The compass system can be operated as the equivalent of a latitude-corrected directional gyro or as a magnetic-slaved compass. As a magnetic-slaved compass, the system is influenced by the earth's magnetic field. The compass simulates a directional gyro by providing a fixed reference heading which is continuously corrected for latitude and drift. The desired fixed reference heading and the amount of latitude must be set manually. Components of the system include a compass amplifier, directional gyro, a remote compass transmitter, a master directional indicator, a repeater indicator amplifier, two repeater indicators, and a slaving control.

2-3. Because of gyro drift, the directional gyro does not hold a constant heading. During directional gyro operation, correction for drift is accomplished by a signal-influenced, mechanical feedback correction circuit, which feeds into the compass system a fixed rate of correction predetermined by manual setting of a latitude correction control. Heading signals originating in the directional gyro are conveyed to the master directional indicator through the azimuth circuit in the amplifier. The heading signals and correction signals are integrated at the master directional indicator to provide change of course and heading information at the indicator dial. During magnetic-slaved operation, correction for gyro drift is automatically accomplished by a signal-influenced, mechanical feedback circuit that is actuated by a voltage from the azimuth takeoff in the directional gyro. The voltage is proportional to the drift of the gyro. Figure 2-2 illustrates complete system data flow.

2-4. COMPASS AMPLIFIER. (See figure 2-3.) The compass amplifier is the receiving and distributing center of the compass system. Azimuth, correction, and leveling signals originating in the components of the system are received, amplified, and transmitted by separate channels of the amplifier. Primary power to operate the compass system is distributed from the amplifier to the system components. The amplifier contains a D-C power supply for the three channels. The amplifier is located on a shelf on the bulkhead at the forward end of the baggage compartment.

2-5. DIRECTIONAL GYRO. (See figure 2-3.) The directional gyro is the stabilizing component of the compass system when the system is in magnetic-slaved operation and is the directional reference component when the system is in directional gyro operation. An azimuth takeoff delivers to the compass system an electrical signal proportional to the position of the gyro spin axis and the directional gyro mounting base. An azimuth dial, with a scale graduated from 0 to 360 degrees, and a pointer are visible through a window at the upper part of the case. The purpose of the dial is to enable observation of the azimuth drift rate of the directional gyro motor spin axis. The directional gyro is installed below floor level at the radar-navigator's station and a small door is installed in the floor cover plate to permit visual inspection of the unit. A mirror, installed in line with the window on the side of the gyro, enables the azimuth drift of the gyro to be determined.

2-6. REMOTE COMPASS TRANSMITTER. (See figure 2-3.) The remote compass transmitter is a magnetic, direction-sensing component when the system is operated as a magnetic-slaved compass. The transmitter provides a magnetic heading signal for the master directional indicator. The forward end of the transmitter plate, or mounting flange, is calibrated in degrees to provide a reference for installation of the transmitter. The transmitter is installed on a small, flat platform at the aft end of tail cone compartment.

2-7. MASTER DIRECTIONAL INDICATOR. (See figure 2-3.) The master directional indicator is the heading indicating component of the compass system. The mechanism in the indicator integrates all signals received from the directional gyro and the remote compass transmitter; corrects the heading pointer for azimuth drift of the directional gyro due to earth's rotation; and provides control signals for operating remote indicators, directional reference signals for search radar, and directional control signals for the automatic pilot system. The master directional indicator is located on the radar-navigator's instrument panel.

2-8. REPEATER INDICATOR AMPLIFIER. (See figure 2-3.) The repeater indicator amplifier provides amplification of power through the main radio junction box to the two Type V-3 repeater indicators which duplicate the master indicator reading on the pilot's and copilot's instrument panel. Location of the repeater indicator amplifier is shown in figure 2-1.

2-9. REPEATER INDICATOR. (See figure 2-3.) The repeater indicators duplicate the master direc-

A

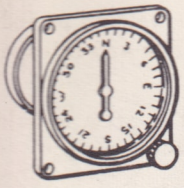

PILOT REPEATER INDICATOR

B

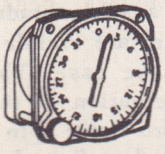

COPILOT REPEATER INDICATOR

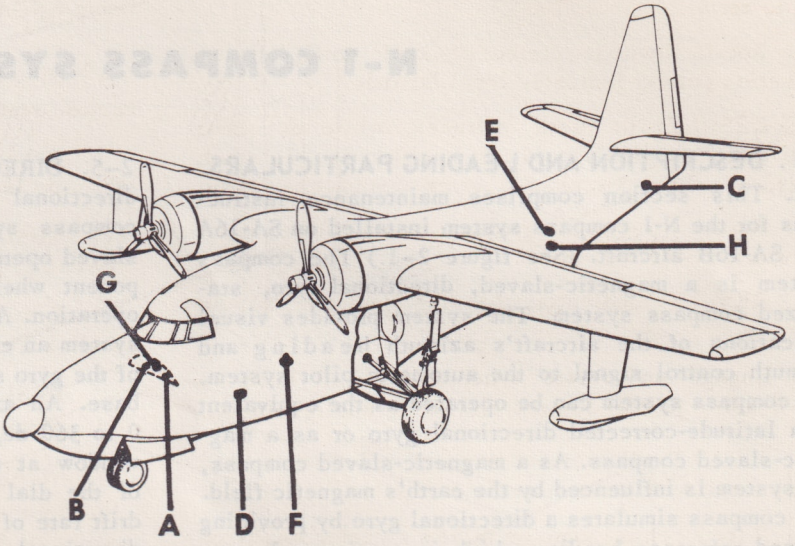

C

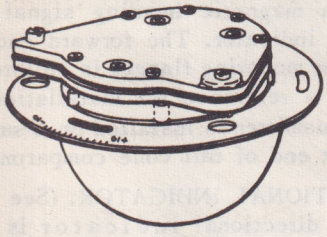

REMOTE COMPASS TRANSMITTER

D

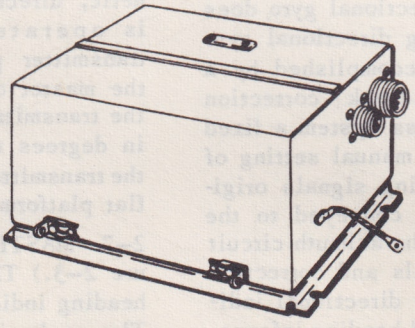

REPEATER INDICATOR AMPLIFIER

E

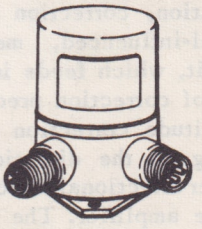

SLAVING CONTROL

F

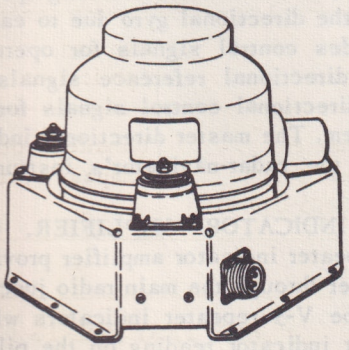

DIRECTIONAL GYRO

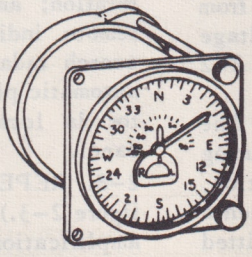

MASTER DIRECTIONAL INDICATOR

G

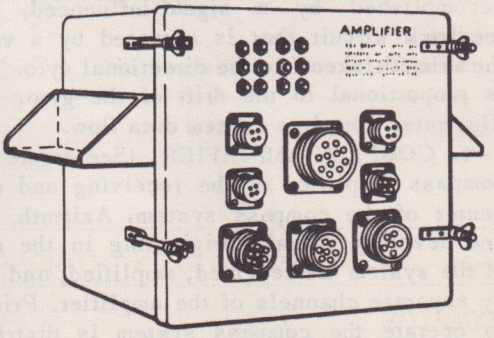

COMPASS AMPLIFIER

H

3.2.0-10-57

Figure 2–1. N-1 Compass System Component Locations

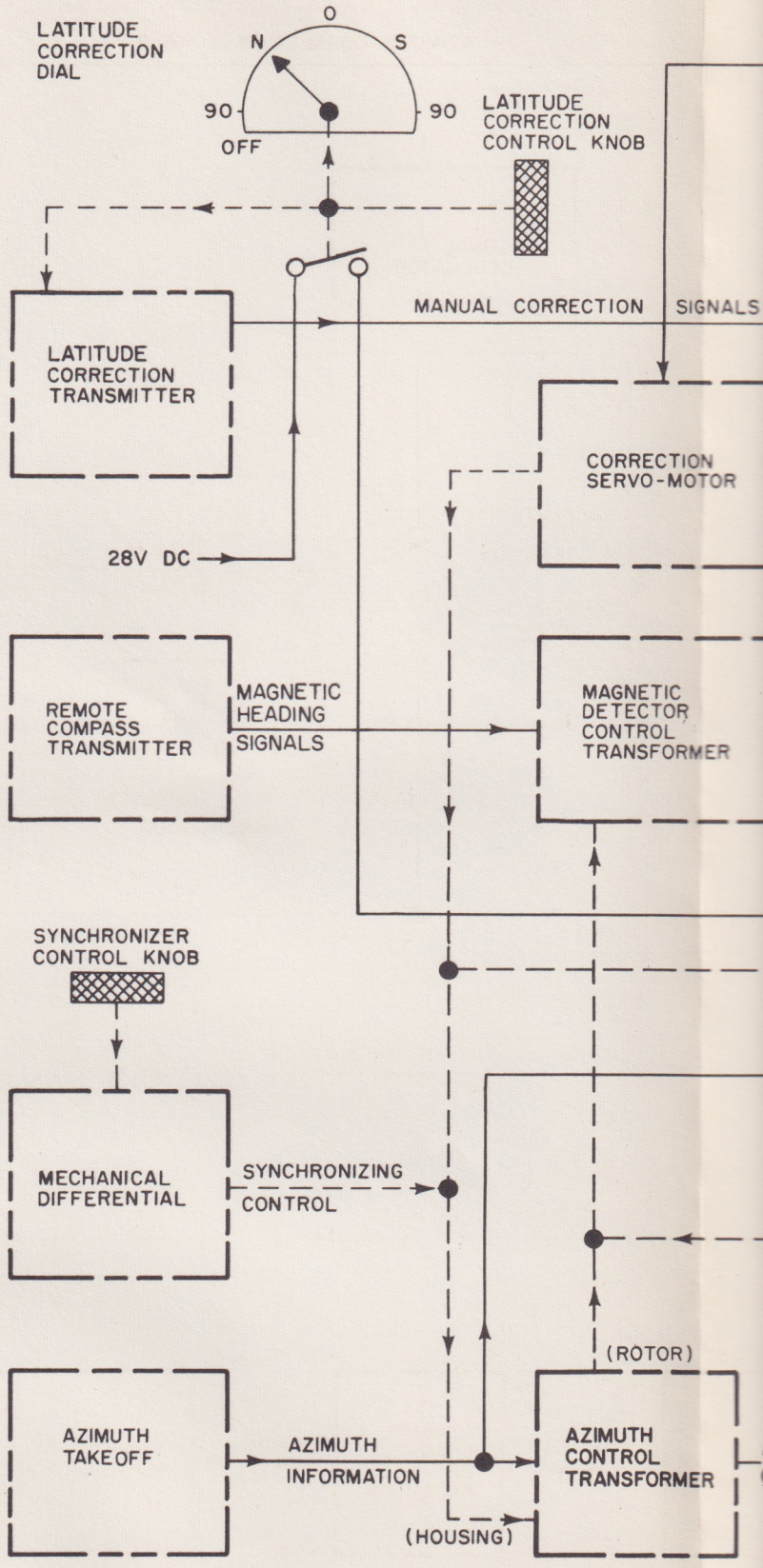

Figure 2–2. N-1 Compass System Comple

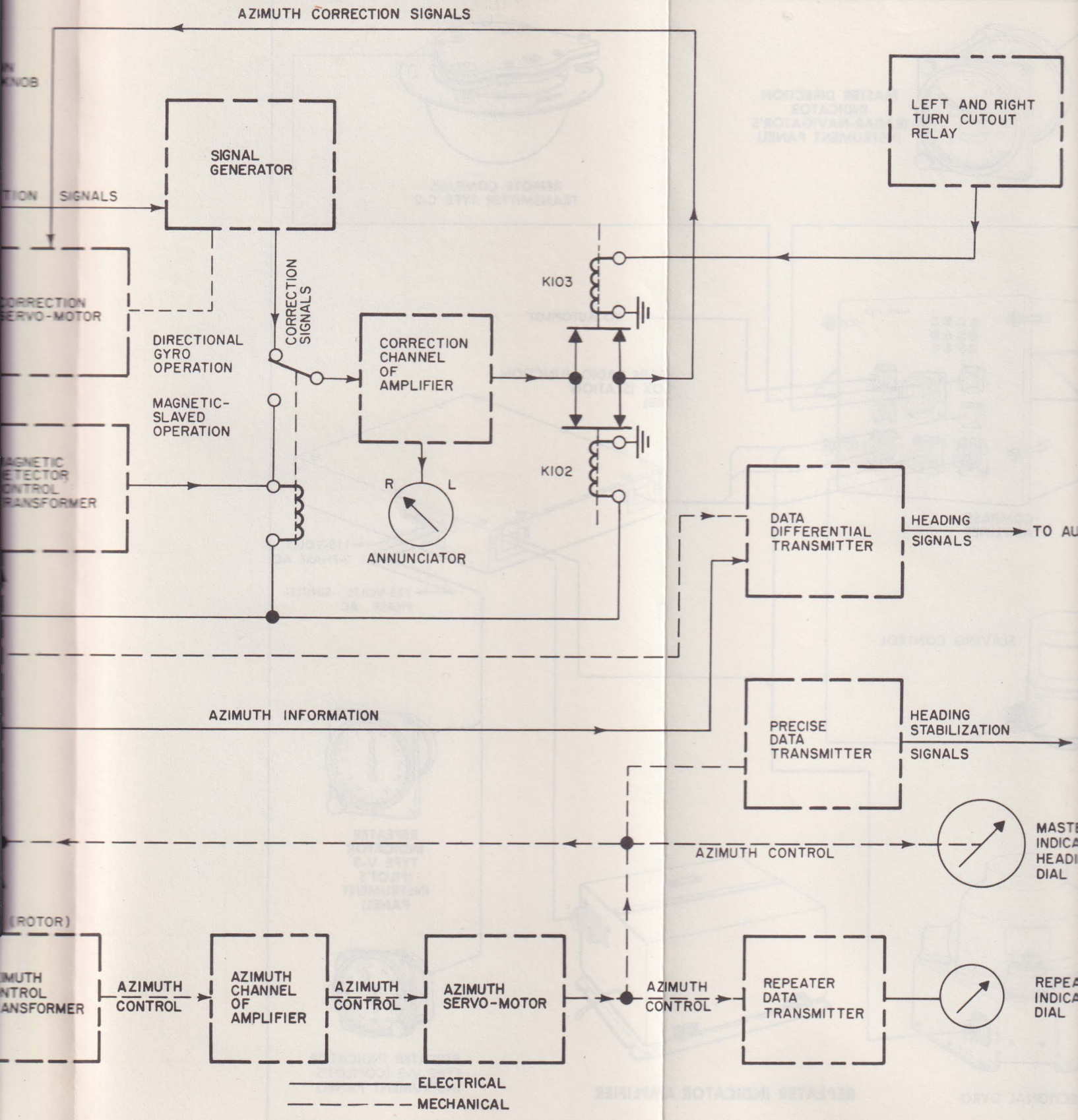

System Complete Functional Data Flow

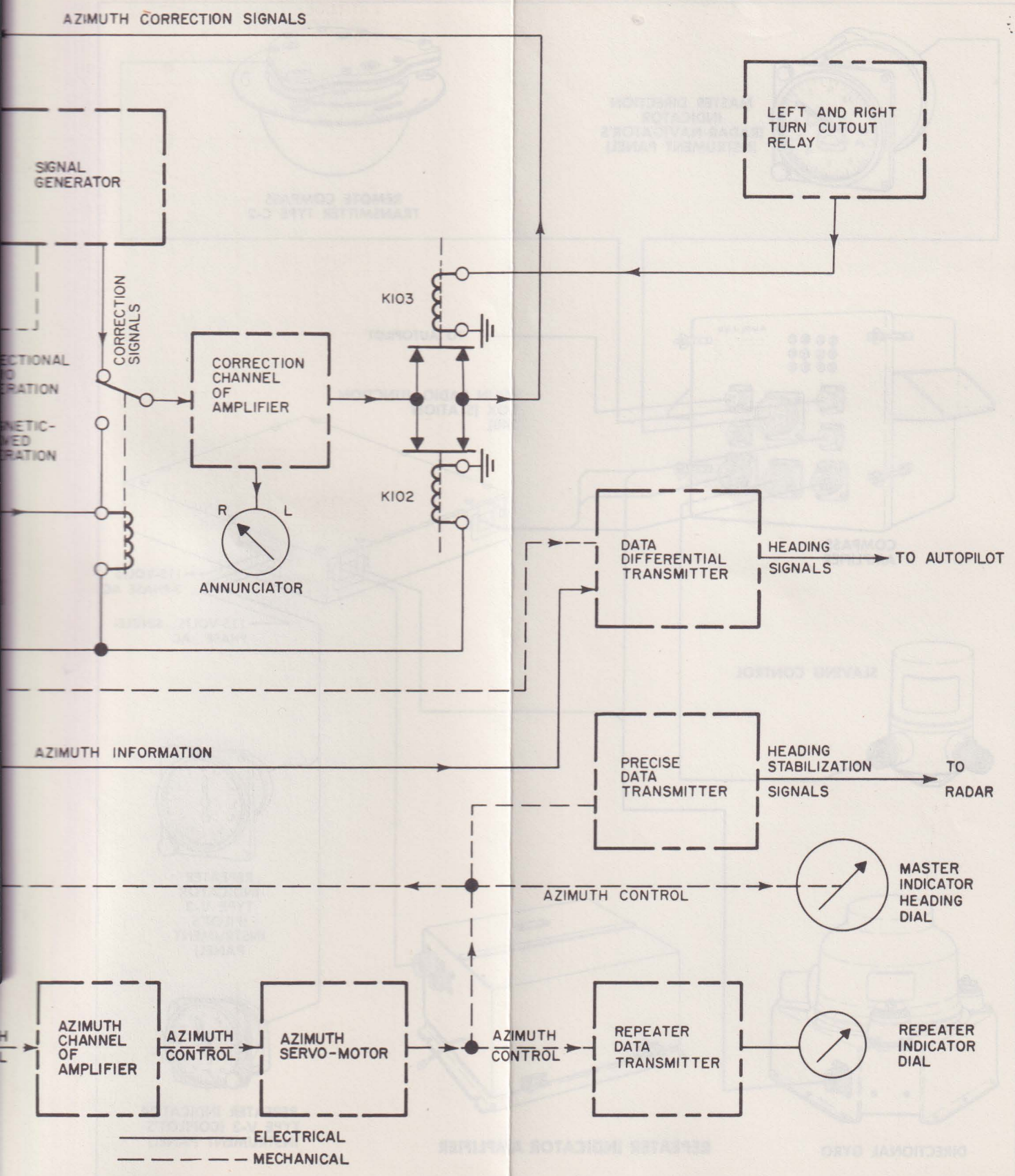

tional Data Flow

3.2.0-10-56

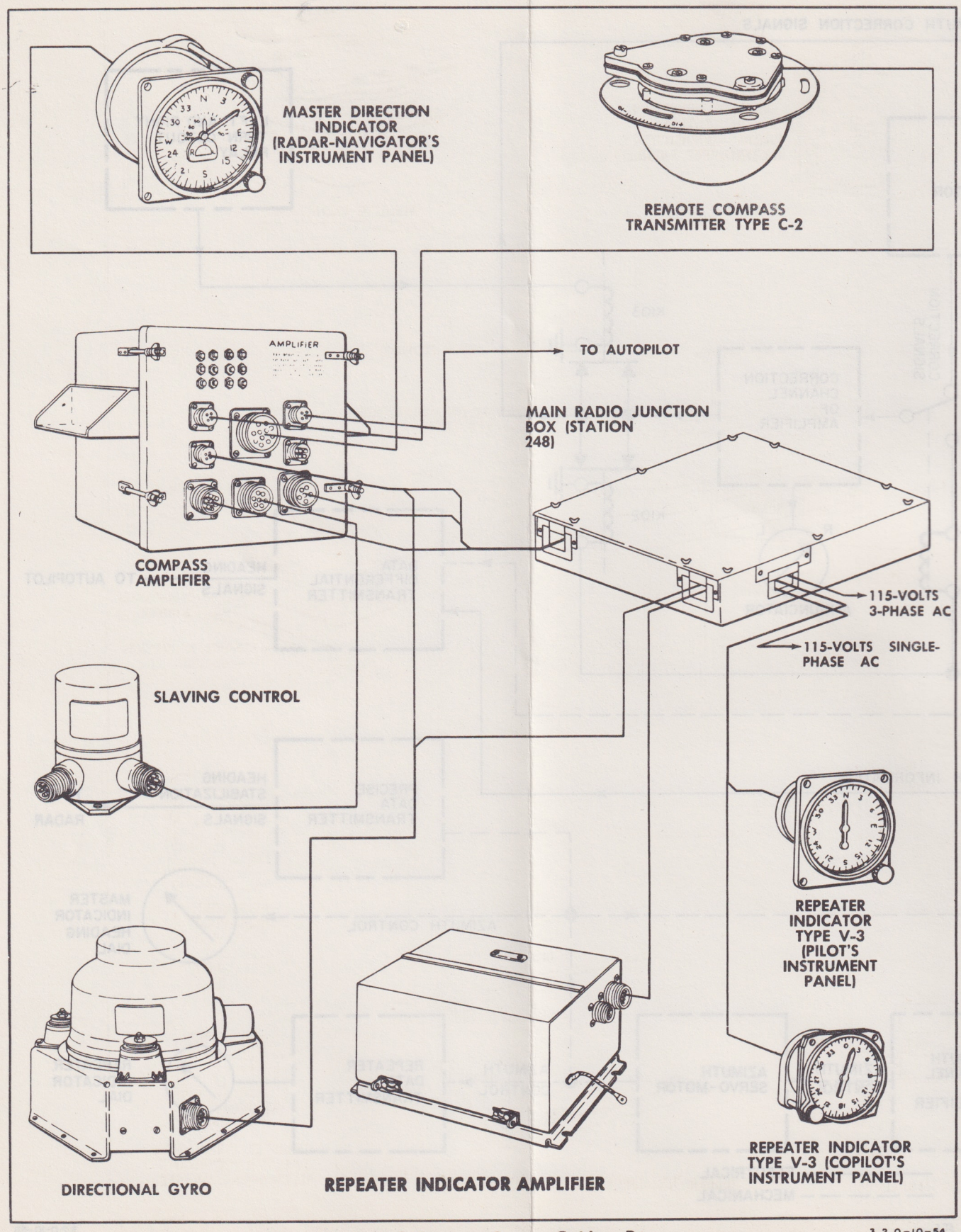

Figure 2–3. N-1 Compass System Cabling Diagram

3.2.0-10-54

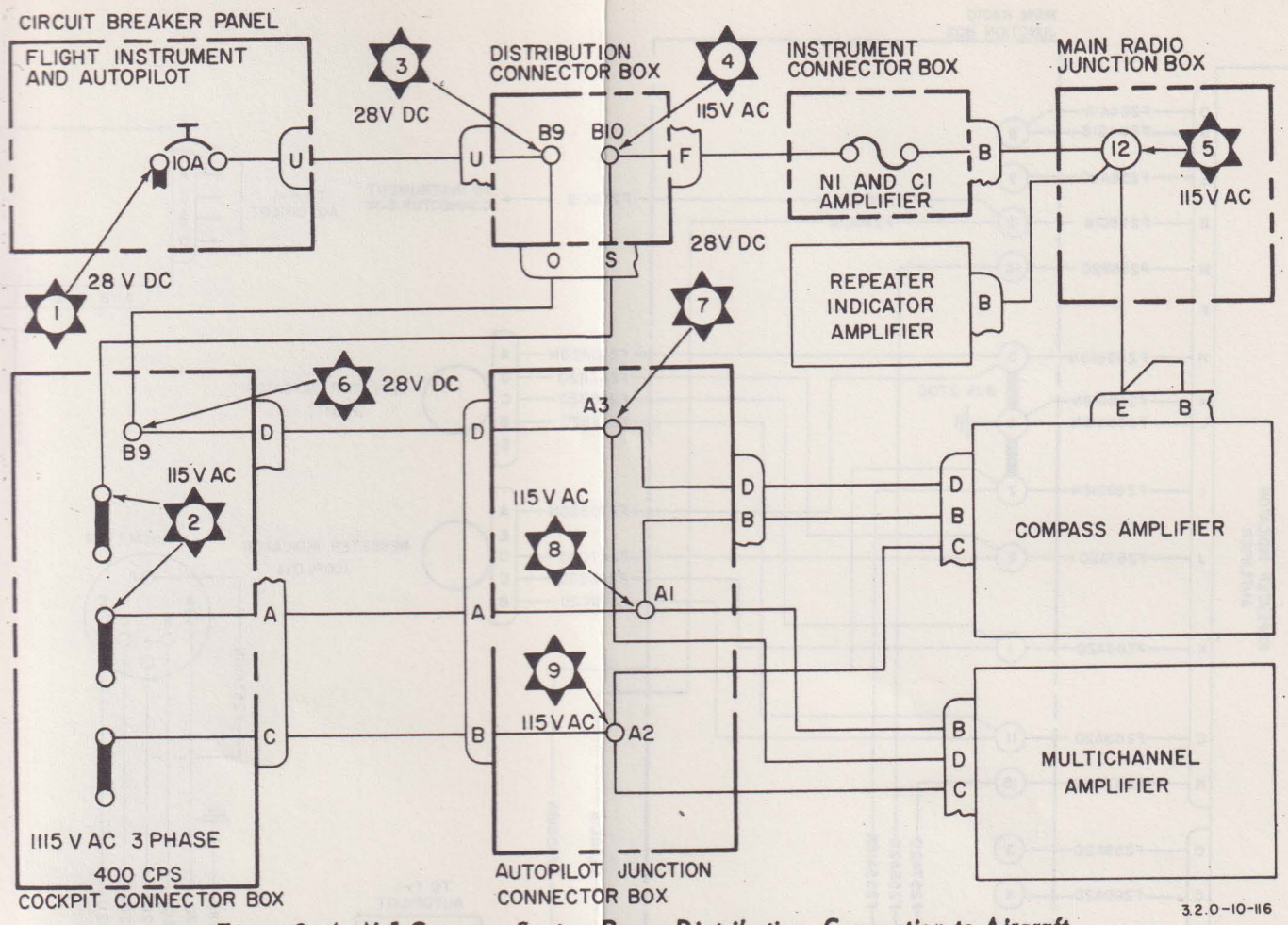

Figure 2–4. N-1 Compass System Power Distribution, Connection to Aircraft

tional indicator reading and provide an accurate indication of azimuth heading. A repeater indicator is provided on the pilot's instrument panel and one on the copilot's instrument panel.

2–10. SLAVING CONTROL. (See figure 2–3.) The slaving control is a gyro-controlled rate switch that functions to minimize compass system indicator heading errors which occur during turns of the aircraft. The slaving control contains a gyro motor, left-hand and right-hand turn cutout relays, and a turn-operated switch. During sharp turns of the aircraft, the signal from the remote compass transmitter to the compass amplifier is stopped at the slaving control. The signal, if not stopped, would cause erroneous readings on the indicators. The slaving control is located on a shelf on the aft face of the cabin aft bulkhead adjacent to the amplifier.

2–11. OPERATIONAL CHECKOUT.

2–12. OPERATIONAL CHECKOUT OF N-1 COMPASS SYSTEM.

a. Make sure aircraft is electrically grounded to an unpainted surface on either main landing gear or nose gear.

b. Connect electrical power source.

c. Engage standby, autopilot, flight instrument, and main circuit breakers.

d. Allow a 5-minute warmup period; then turn latitude correction control knob, located on master directional indicator, to OFF.

e. Engage and rotate synchronizer L-R knob, located on master directional indicator, until annunciator pointer is centered.

Note

If the annunciator pointer is in the R sector, rotate the knob clockwise; if the pointer is in the L sector, rotate the knob counterclockwise. It is possible to center the pointer by rotating the knob opposite to the above directions. If this is done, the heading pointer will not be synchronized in the proper position.

f. Engage and rotate synchronizer L-R knob until heading pointer is 3 to 5 degrees to right of aircraft magnetic heading.

RESULT: Annunciator pointer should move

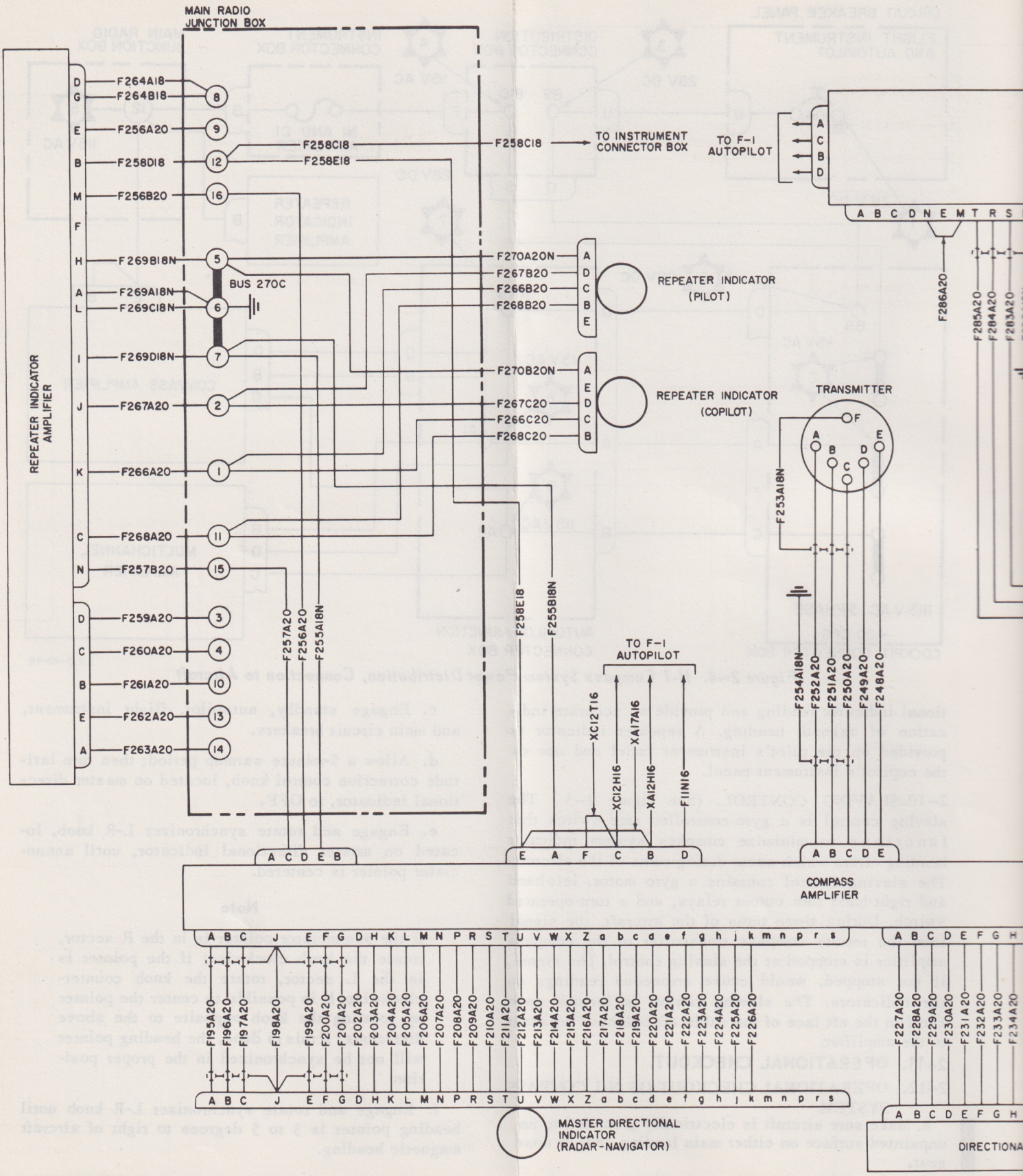

Figure 2–5. N-1 Co

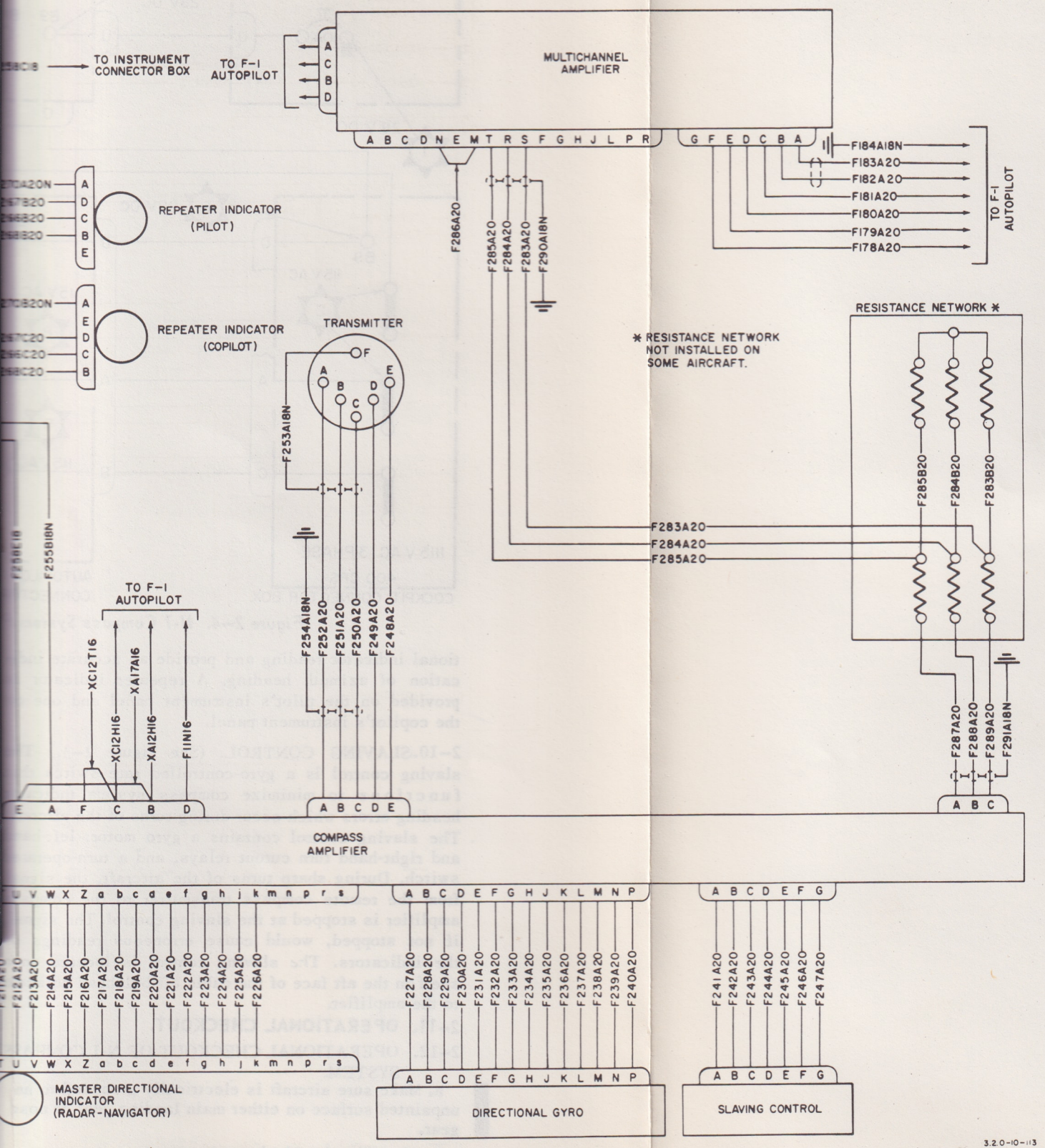

Figure 2–5. N-1 Compass System Intercabling

approximately 30 degrees to right into area L; white dot near E on indicator dial should begin rotating counterclockwise; heading pointer should return to original position; and annunciator pointer should return to zero.

g. Rotate latitude correction knob until latitude correction pointer indicates local latitude.

RESULT: In north latitudes, white dot near E on indicator dial should rotate clockwise. In south latitudes, white dot should rotate counterclockwise.

h. Rotate directional gyro as far as vibration insulators on base will allow.

RESULT: Indicator heading pointer should rotate in same direction.

i. Engage and rotate synchronizer L-R knob so that heading pointer rotates clockwise one revolution.

RESULT: Pointers of repeater indicators should follow rotation without sticking or lagging.

j. Rotate control knob on pilot's repeater indicator to turn dial one revolution.

RESULT: Repeater indicator pointer should not depart from indicated heading.

k. Rotate control knob on copilot's repeater indicator to turn dial one revolution.

RESULT: Repeater indicator pointer should not depart from indicated heading.

l. Engage and rotate synchronizer L-R knob in clockwise direction.

RESULT: Heading and repeater indicator pointers should follow clockwise rotation. Rotating compass cards of course indicators, ID-250A/ARN, should follows master directional indicator heading pointer.

m. Repeat step e to synchronize system.

n. Place power switch on autopilot turn and pitch control at ON.

RESULT: After approximately 2 minutes, green lights on turn and pitch control should begin blinking.

o. Allow additional 10-minute warmup period; then press ENGAGE button for 3 seconds and release.

RESULT: Automatic pilot system should have control over aircraft control surfaces.

p. Rotate directional gyro clockwise as far as vibration insulators on base will permit.

RESULT: Left-hand rudder pedals should move forward.

q. Rotate directional gyro counterclockwise as far as vibration insulators on base will permit.

RESULT: Right-hand rudder pedals should move forward.

r. Engage and rotate synchronizer L-R knob in clockwise direction until heading pointer is approximately 10 degrees from synchronization.

RESULT: As heading pointer returns to synchronization, the right-hand rudder pedals should move forward slowly.

s. Engage and rotate synchronizer L-R knob in counterclockwise direction until heading pointer is approximately 10 degrees from synchronization.

RESULT: As heading pointer returns to synchronization, the left-hand rudder pedals should move forward slowly.

t. Repeat step e to synchronize system.

u. Disengage autopilot, flight instrument, standby, and main circuit breakers.

v. Disconnect electrical power source.

2-13. SYSTEM ANALYSIS.

TEST EQUIPMENT REQUIRED

Figure and Index NO.	Name	Type Designation	Alternate	Use and Application
(None)	MULTIMETER	AN/PSM-6	Multimeter, Federal Stock NO. 6625-649-4593	Troubleshooting compass system.

2-14. TROUBLESHOOTING N-1 COMPASS SYSTEM. (See figures 2-4 and 2-5.)

SYMPTOM	FUNCTIONAL LOOP	KEY TEST POINTS
Autopilot does not hold aircraft on selected course.	Remote compass transmitter. Directional gyro.	

SYMPTOM	FUNCTIONAL LOOP	KEY TEST POINTS
	Master directional indicator. Compass amplifier.	
Directional gyro does not level.	Directional gyro. Directional gyro motor. Compass amplifier.	
Directional gyro does not magnetically slave.	Slaving control. Directional gyro.	
Master directional indicator inaccurate.	Compass amplifier. Master directional indicator.	
Course indicators disagree with master directional indicator.	Master indicator. Compass amplifier. Repeater indicator amplifier.	

2-15. ADJUSTMENT.

2-16. ADJUSTMENT OF N-1 COMPASS SYSTEM. (See figure 2-6.)

a. Make sure aircraft is electrically grounded to an unpainted surface on either main landing gear or nose gear.

b. Disconnect cable from slaving control.

c. Remove rear covers from master directional indicator.

d. Connect electrical power source.

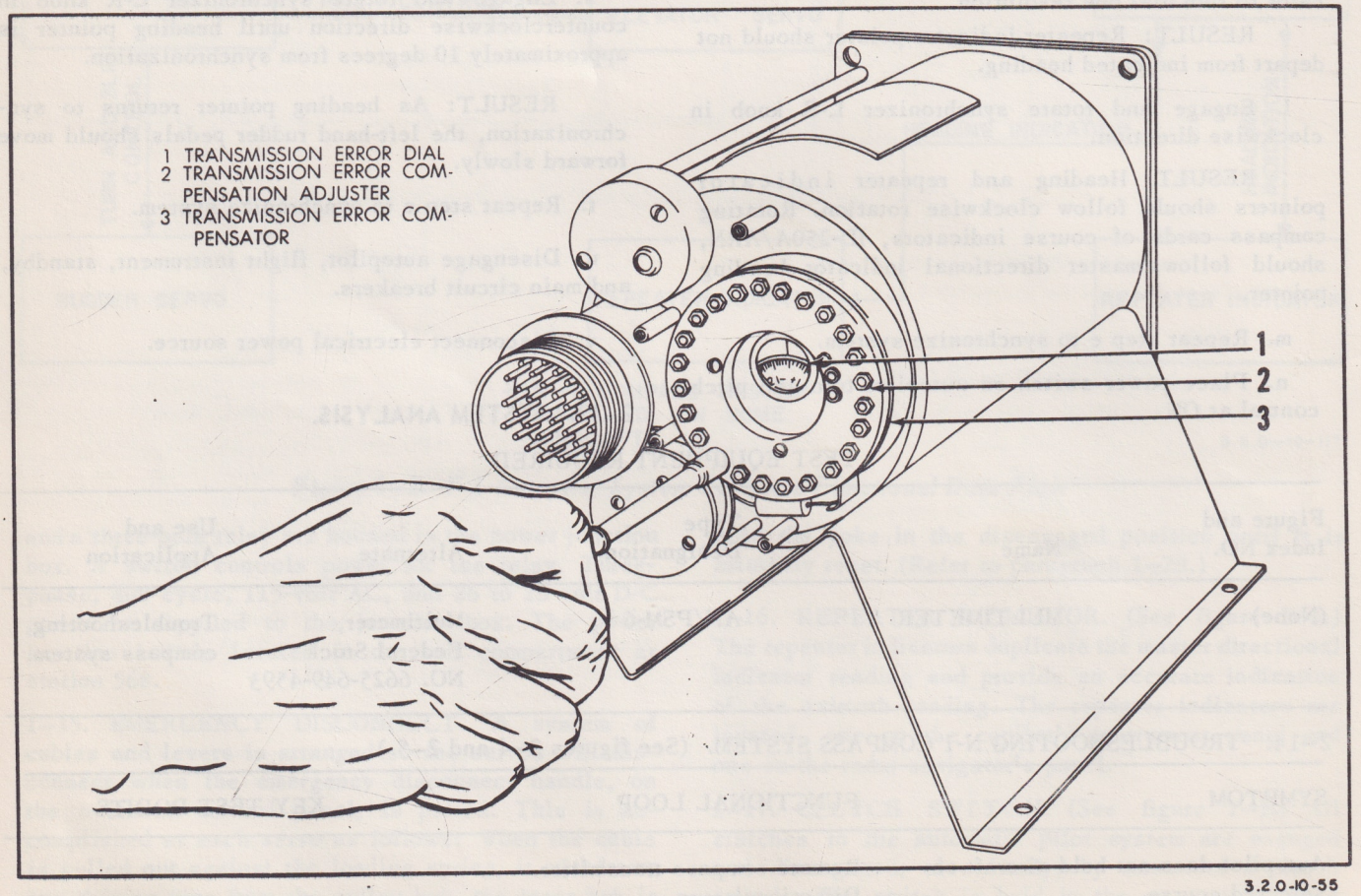

Figure 2-6. Adjustment of Master Indicator

e. Engage main and standby inverter circuit breakers and automatic pilot and flight instrument circuit breakers.

f. Energize all electrical equipment that may affect magnetic field about remote compass transmitter.

g. Allow a 15-minute warmup period, and rotate latitude correction knob until heading pointer indicates local latitude.

h. Engage and rotate synchronizer L-R knob until heading pointer indicates zero degrees.

i. If transmission error dial pointer, at rear of master indicator, does not indicate zero degrees, rotate adjuster adjacent to zero degree decal until zero reading is obtained.

CAUTION

Do not rotate adjuster so that transmission error pointer exceeds 3 degrees from zero. Do not rotate any adjuster more than two turns at one time. If the pointer does not indicate zero after two turns, rotate adjacent adjusters one full turn in same direction as the first adjuster; then set the first adjuster to zero. The pointer should never indicate more than 2 degrees between any two adjacent adjusters.

j. Repeat steps h and i for each adjuster position. Provision is made for 24 adjustments, at 15-degree intervals, from zero to 345 degrees.

k. Rotate heading pointer 360 degrees in clockwise direction and observe reading on transmission error dial at 15-degree intervals. If zero readings are not obtained, readjust appropriate adjusters.

l. Rotate heading pointer 360 degrees in counterclockwise direction and observe reading on transmission error dial at 15-degree intervals. If zero readings are not obtained, readjust appropriate adjusters.

m. Turn off all electrical equipment in aircraft energized for this adjustment.

Note

Make sure that main and standby inverter circuit breakers and automatic pilot and flight instruments are disengaged.

n. Disconnect electrical power source.

o. Install covers on rear of master directional indicator.

p. Connect cable to slaving control.

SECTION III

RADIO RECEIVING SET AN/ARN-18

3–1. DESCRIPTION AND LEADING PARTICULARS.

3–2. This section comprises maintenance instructions for radio receiving set AN/ARN-18, installed in SA-16A and SA-16B aircraft. (See figure 3–1.) The set contains 20 navigational channels, 300 KC apart, in the 329.3-335.0 MC band. The set is controlled by receiver control C-996/A, which is part of radio set AN/ARN-14. With the course indicator of radio set AN/ARN-14, the set provides a continuous, visual

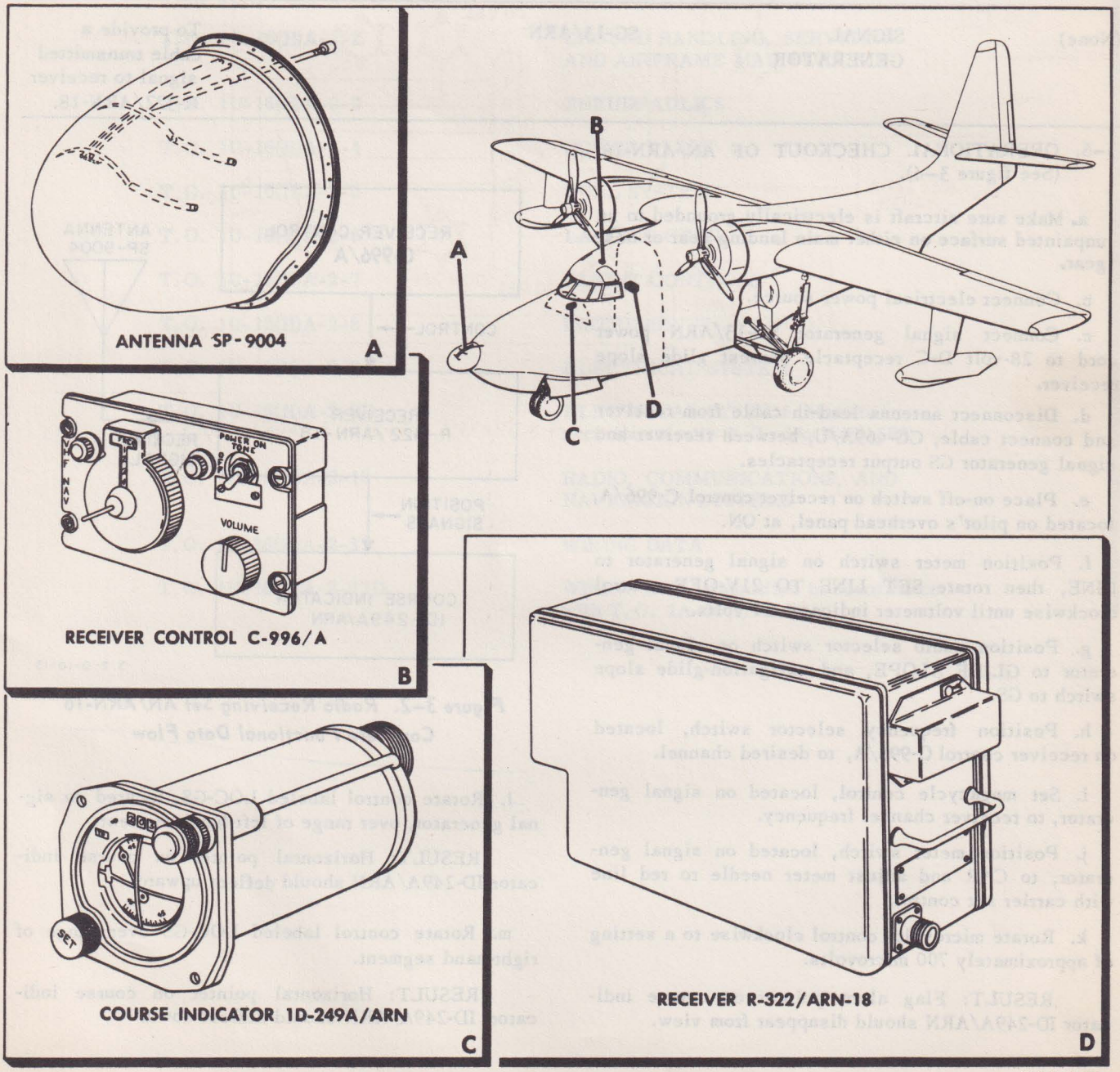

Figure 3–1. Radio Receiving Set AN/ARN-18 Component Locations

3.2.0-10-59

indication of the aircraft's position relative to the established glide slope. Prinicpal components of the set are a receiver and an antenna. Figure 3–2 illustrates complete system data flow.

3–3. RECEIVER R-322/ARN-18. (See figure 3–3.) The receiver receives, amplifies, and converts glide slope signals into control signals that operate the horizontal pointer in the course indicator. The receiver is a fixed tuned superheterodyne receiver, with channel frequencies regulated by 20 crystals. The receiver is located at the radio operator's station on the top shelf.

3–4. ANTENNA SP-9004. (See figure 3–3.) The antenna is located in the bow radome on the top side.

3–5. OPERATIONAL CHECKOUT.

TEST EQUIPMENT REQUIRED

Figure and Index NO.	Name	Type Designation	Alternate	Use and Application
(None)	SIGNAL GENERATOR	SG-13/ARN		To provide a cable transmitted signal to receiver R-322/ARN-18.

3–6. OPERATIONAL CHECKOUT OF AN/ARN-18. (See figure 3–4).

a. Make sure aircraft is electrically grounded to an unpainted surface on either main landing gear or nose gear.

b. Connect electrical power source.

c. Connect signal generator SG-13/ARN power cord to 28-volt D-C receptacle nearest glide slope receiver.

d. Disconnect antenna lead-in cable from receiver and connect cable, CG-469A/U, between receiver and signal generator GS output receptacles.

e. Place on-off switch on receiver control C-996/A, located on pilot's overhead panel, at ON.

f. Position meter switch on signal generator to LINE, then rotate SET LINE TO 21V-OFF control clockwise until voltmeter indicates 21 volts.

g. Position audio selector switch on signal generator to GLIDE SLOPE, and navigation-glide slope switch to GS.

h. Position frequency selector switch, located on receiver control C-996/A, to desired channel.

i. Set megacycle control, located on signal generator, to receiver channel frequency.

j. Position meter switch, located on signal generator, to CAR and adjust meter needle to red line with carrier set control.

k. Rotate microvolts control clockwise to a setting of approximately 700 microvolts.

RESULT: Flag alarm pointer on course indicator ID-249A/ARN should disappear from view.

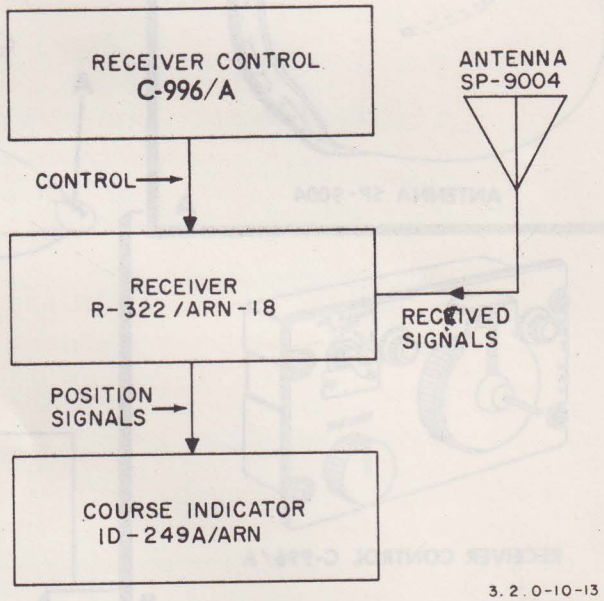

Figure 3–2. Radio Receiving Set AN/ARN-18 Complete Functional Data Flow

l. Rotate control labeled LOC-GS, located on signal generator, over range of left-hand segment.

RESULT: Horizontal pointer on course indicator ID-249A/ARN should deflect upward.

m. Rotate control labeled LOC-GS over range of right-hand segment.

RESULT: Horizontal pointer on course indicator, ID-249A/ARN should deflect down.

n. Repeat steps h through m for each channel.

o. Rotate control labeled SET LINE TO 21V-OFF, located on signal generator, to OFF.

p. Place on-off switch on receiver control C-996/A at OFF.

q. Disconnect signal generator cable, CG-409A/U, and power cord from receptacles.

r. Connect antenna lead-in cable to receiver.

s. Disconnect electrical power source.

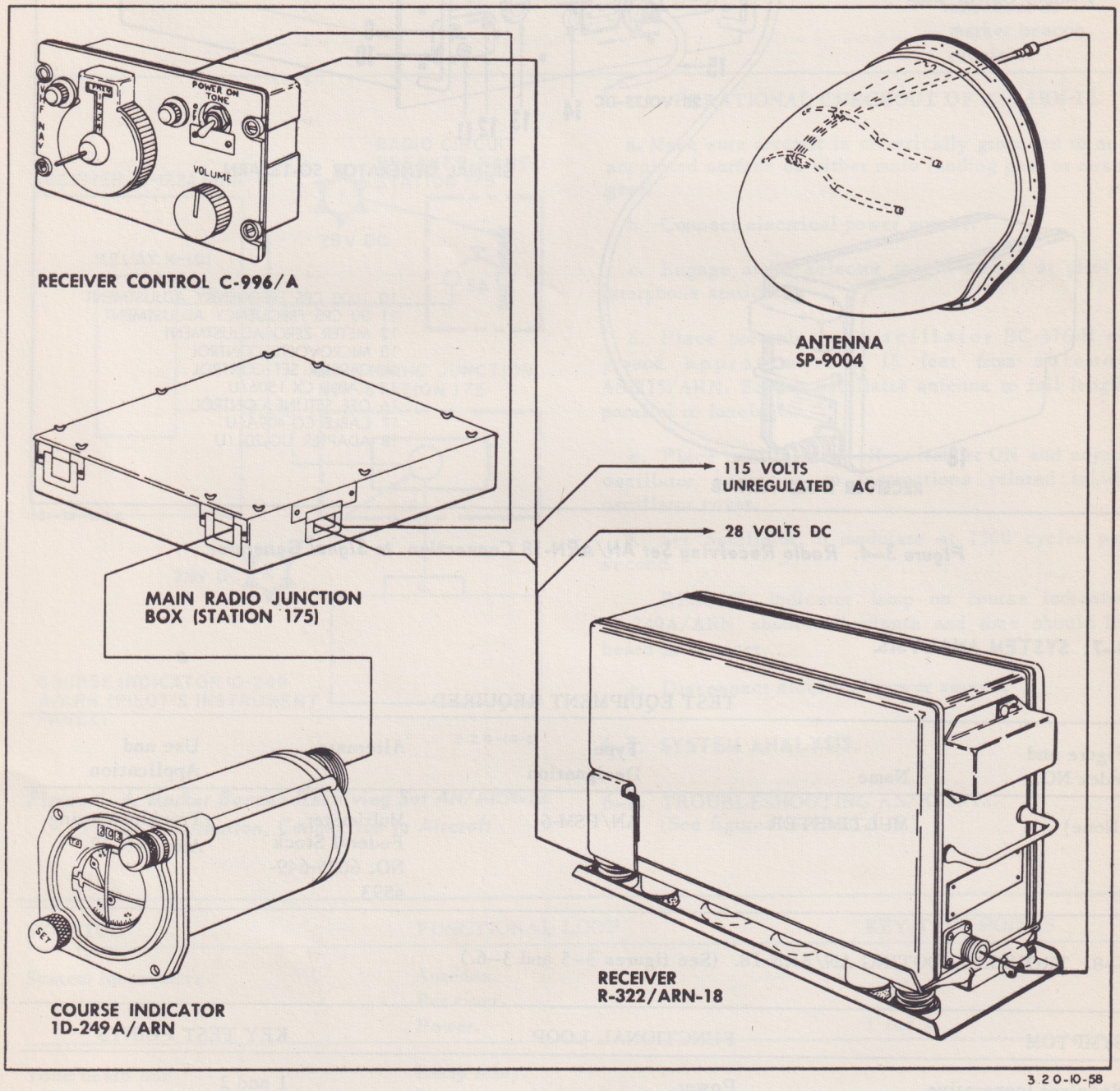

Figure 3–3. Radio Receiving Set AN/ARN-18 Cabling Diagram

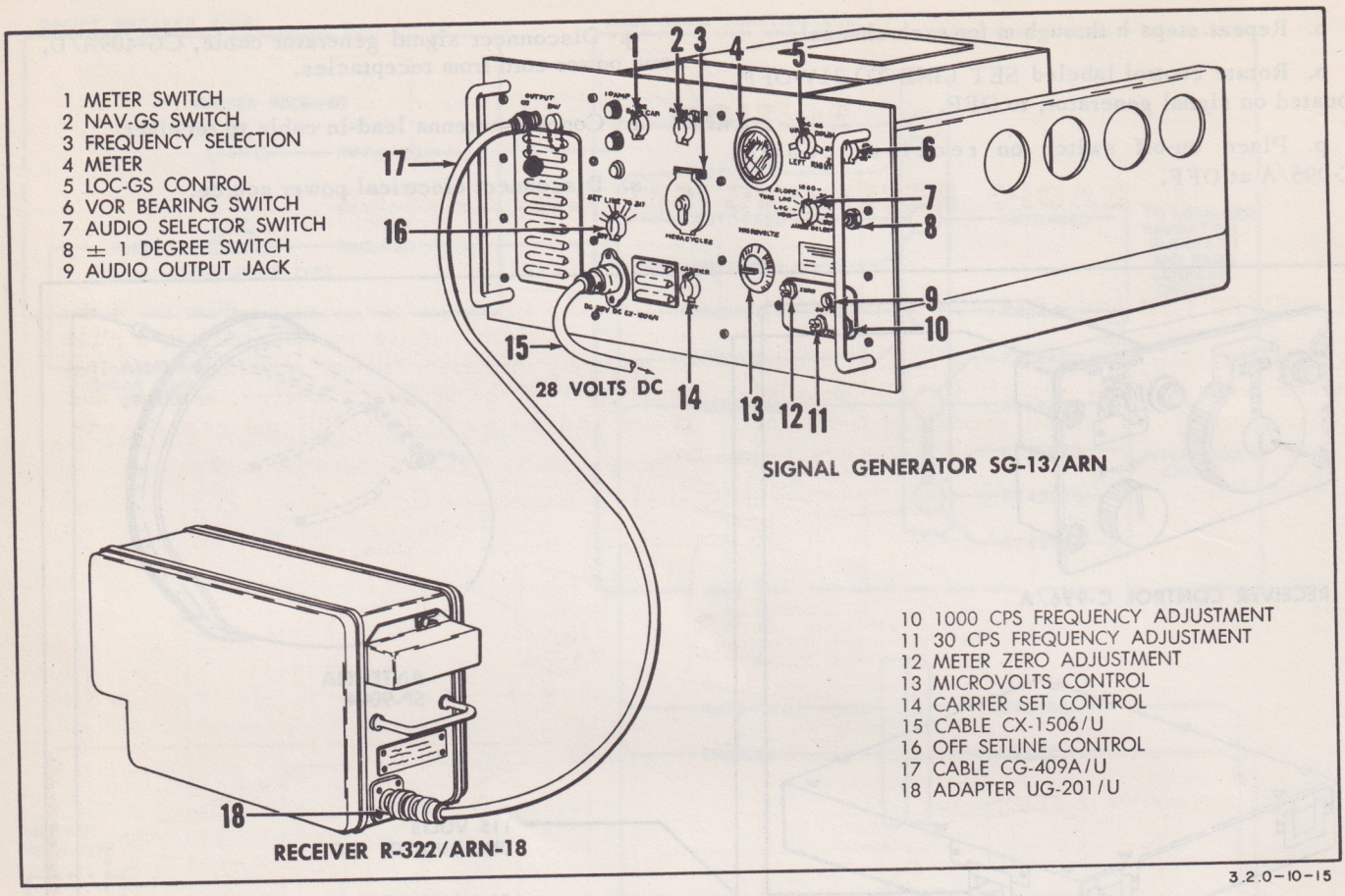

Figure 3–4. Radio Receiving Set AN/ARN-18 Connection to Signal Generator

3–7. SYSTEM ANALYSIS.

TEST EQUIPMENT REQUIRED

Figure and Index NO.	Name	Type Designation	Alternate	Use and Application
(None)	MULTIMETER	AN/PSM-6	Multimeter, Federal Stock NO. 6625-649-4593	Troubleshooting AN/ARN-18.

3–8. TROUBLESHOOTING AN/ARN-18. (See figures 3–5 and 3–6.)

SYMPTOM	FUNCTIONAL LOOP	KEY TEST POINTS
Receiver inoperative.	Power. Antenna. Receiver.	1 and 2

SYMPTOM	FUNCTIONAL LOOP	KEY TEST POINTS
Flag alarm on indicator visible at all times.	Receiver.	
Receiver cannot be tuned to any one frequency.	Receiver.	
Horizontal pointer on indicator gives erratic indication.	Receiver.	

3-9. REMOVAL AND REPLACEMENT.

3-10. REMOVAL OF ANTENNA SP-9004.

a. Remove bow radome. (Refer to paragraph 21-20.)

b. Remove bolts attaching antenna.

c. Lift antenna and disconnect cables.

d. Remove antenna.

3-11. REPLACEMENT OF ANTENNA SP-9004.

a. Connect cables to antenna.

b. Position antenna and install attaching bolts.

c. Replace bow radome. (Refer to paragraph 21-21.)

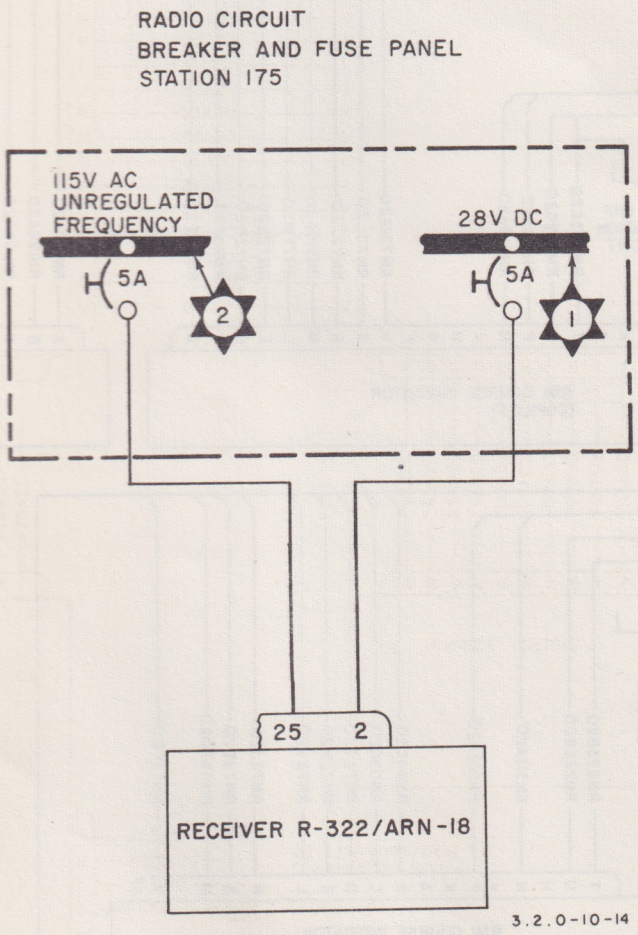

Figure 3-5. Radio Receiving Set AN/ARN-18 Power Distribution, Connection to Aircraft

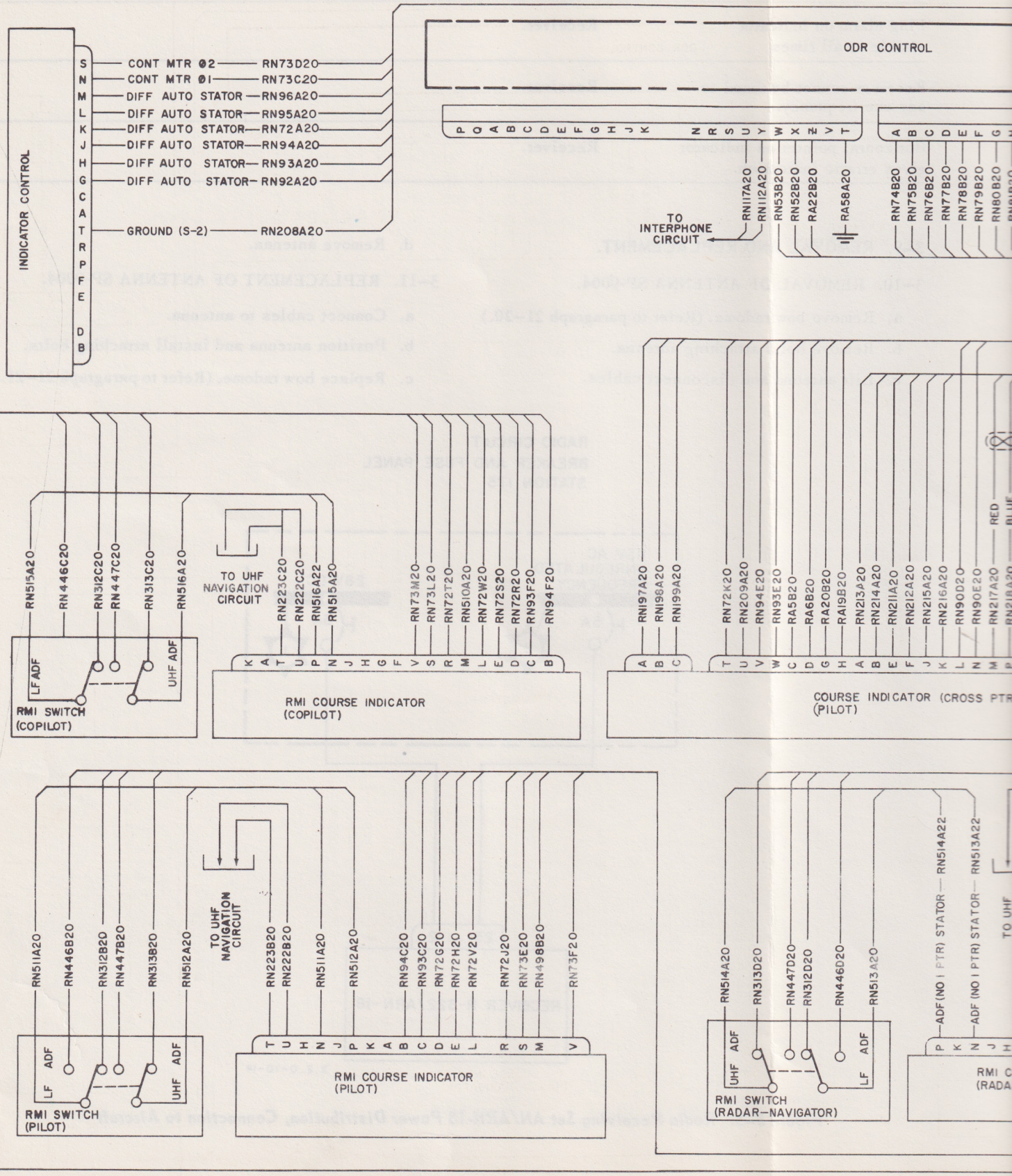
INDICATOR CONTROL
CONT MTR Ø2 — RN73D20
CONT MTR Ø1 — RN73C20
DIFF AUTO STATOR — RN96A20
DIFF AUTO STATOR — RN95A20
DIFF AUTO STATOR — RN72A20
DIFF AUTO STATOR — RN94A20
DIFF AUTO STATOR — RN93A20
DIFF AUTO STATOR — RN92A20
GROUND (S-2) — RN208A20
ODR CONTROL
TO INTERPHONE CIRCUIT
RN117A20
RN112A20
RN53B20
RN52B20
RA22B20
RA58A20
RN74B20
RN75B20
RN76B20
RN77B20
RN78B20
RN79B20
RN80B20
RN515A20
RN446C20
RN312C20
RN447C20
RN313C20
RN516A20
LF ADF
UHF ADF
RMI SWITCH (COPILOT)
TO UHF NAVIGATION CIRCUIT
RN223C20
RN222C20
RN516A22
RN515A20
RN73M20
RN73L20
RN72T20
RN510A20
RN72W20
RN72S20
RN72R20
RN93F20
RN94F20
RMI COURSE INDICATOR (COPILOT)
RN197A20
RN198A20
RN199A20
RN72K20
RN209A20
RN94E20
RN93E20
RA5B20
RA6B20
RA20B20
RA19B20
RN213A20
RN214A20
RN211A20
RN212A20
RN215A20
RN216A20
RN90D20
RN90E20
RN217A20
RED
COURSE INDICATOR (CROSS PTR (PILOT)
RN511A20
RN446B20
RN312B20
RN447B20
RN313B20
RN512A20
RMI SWITCH (PILOT)
TO UHF NAVIGATION CIRCUIT
RN223B20
RN222B20
RN511A20
RN512A20
RN94C20
RN93C20
RN72G20
RN72H20
RN72V20
RN72J20
RN73E20
RN498B20
RN73F20
RMI COURSE INDICATOR (PILOT)
RN514A20
RN313D20
RN447D20
RN312D20
RN446D20
RN513A20
UHF ADF
LF ADF
RMI SWITCH (RADAR—NAVIGATOR)
ADF (NO I PTR) STATOR — RN514A22
ADF (NO I PTR) STATOR — RN513A22
TO UHF

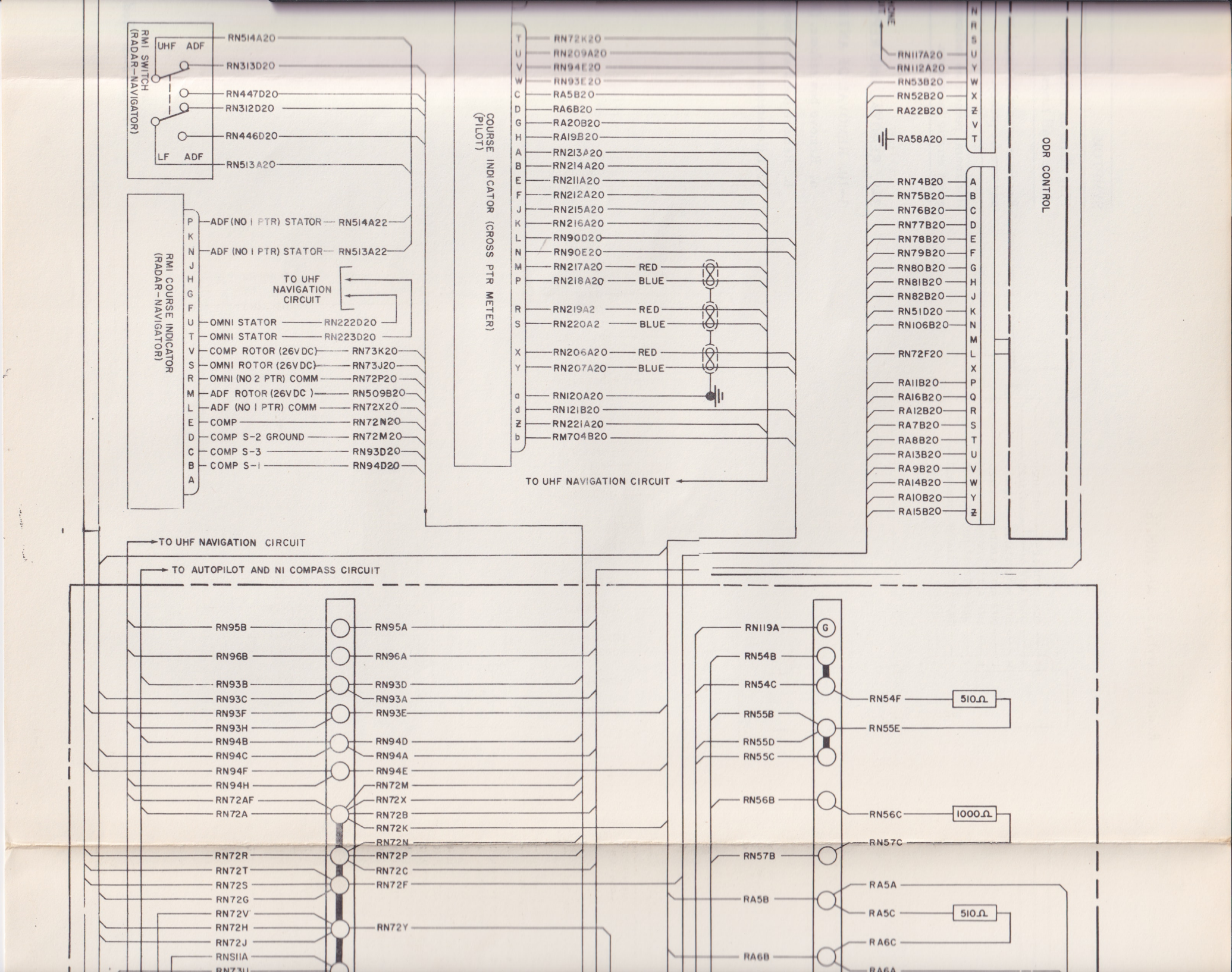
RMI SWITCH (RADAR-NAVIGATOR)
UHF ADF
LF ADF
RN514A20
RN313D20
RN447D20
RN312D20
RN446D20
RN513A20
RMI COURSE INDICATOR (RADAR-NAVIGATOR)
P ADF (NO 1 PTR) STATOR RN514A22
K
N ADF (NO 1 PTR) STATOR RN513A22
J
H
G
F
TO UHF NAVIGATION CIRCUIT
U OMNI STATOR RN222D20
T OMNI STATOR RN223D20
V COMP ROTOR (26V DC) RN73K20
S OMNI ROTOR (26V DC) RN73J20
R OMNI (NO 2 PTR) COMM RN72P20
M ADF ROTOR (26V DC) RN509B20
L ADF (NO 1 PTR) COMM RN72X20
E COMP RN72N20
D COMP S-2 GROUND RN72M20
C COMP S-3 RN93D20
B COMP S-1 RN94D20
A
COURSE INDICATOR (CROSS PTR METER) (PILOT)
T RN72K20
U RN209A20
V RN94E20
W RN93E20
C RA5B20
D RA6B20
G RA20B20
H RA19B20
A RN213A20
B RN214A20
E RN211A20
F RN212A20
J RN215A20
K RN216A20
L RN90D20
N RN90E20
M RN217A20 RED
P RN218A20 BLUE
R RN219A2 RED
S RN220A2 BLUE
X RN206A20 RED
Y RN207A20 BLUE
a RN120A20
d RN121B20
Z RN221A20
b RM704B20
TO UHF NAVIGATION CIRCUIT
RN117A20
RN112A20
RN53B20
RN52B20
RA22B20
RA58A20
N
R
S
U
Y
W
X
Z
V
T
ODR CONTROL
RN74B20 A
RN75B20 B
RN76B20 C
RN77B20 D
RN78B20 E
RN79B20 F
RN80B20 G
RN81B20 H
RN82B20 J
RN51D20 K
RN106B20 N
M
RN72F20 L
X
RA11B20 P
RA16B20 Q
RA12B20 R
RA7B20 S
RA8B20 T
RA13B20 U
RA9B20 V
RA14B20 W
RA10B20 Y
RA15B20 Z
TO UHF NAVIGATION CIRCUIT
TO AUTOPILOT AND NI COMPASS CIRCUIT
RN95B RN95A
RN96B RN96A
RN93B RN93D
RN93C RN93A
RN93F RN93E
RN93H
RN94B RN94D
RN94C RN94A
RN94F RN94E
RN94H RN72M
RN72AF RN72X
RN72A RN72B
RN72K
RN72N
RN72R RN72P
RN72T RN72C
RN72S RN72F
RN72G
RN72V RN72Y
RN72H
RN72J
RNS11A
RN119A G
RN54B
RN54C
RN54F 510Ω
RN55B
RN55E
RN55D
RN55C
RN56B
RN56C 1000Ω
RN57C
RN57B
RA5B
RA5A
RA5C 510Ω
RA6B
RA6C
RA6A

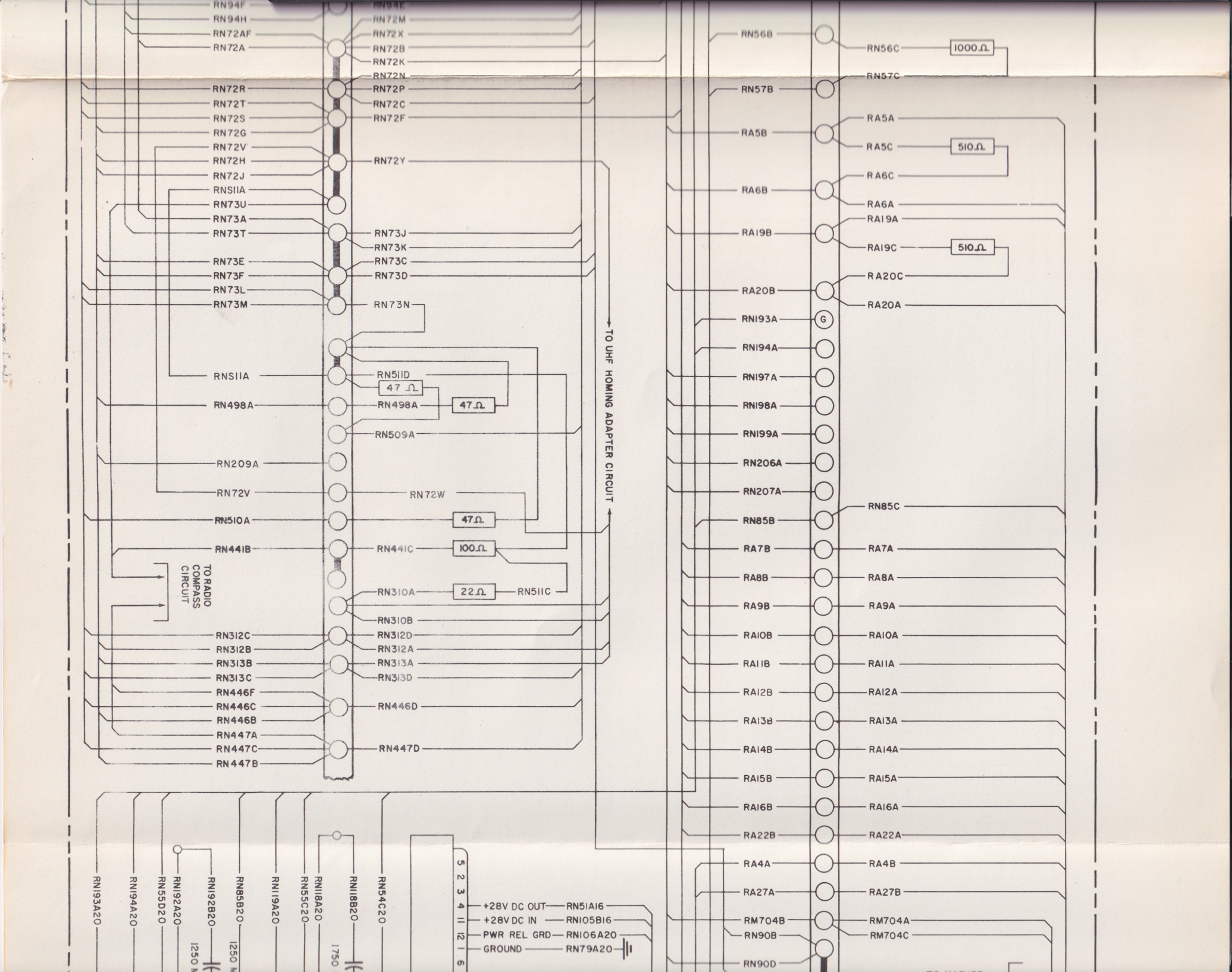
RN94F
RN94H
RN72AF
RN72A
RN72M
RN72X
RN72B
RN72K
RN72N
RN72P
RN72C
RN72F
RN72R
RN72T
RN72S
RN72G
RN72V
RN72H
RN72J
RNSIIA
RN73U
RN73A
RN73T
RN73E
RN73F
RN73L
RN73M
RN72Y
RN73J
RN73K
RN73C
RN73D
RN73N
TO UHF HOMING ADAPTER CIRCUIT
RNSIIA
RN498A
RN209A
RN72V
RN510A
RN441B
RN5IID
47 Ω
RN498A
47Ω
RN509A
RN72W
47Ω
RN441C
100Ω
RN310A
22Ω
RN5IIC
RN310B
RN312C
RN312B
RN313B
RN313C
RN446F
RN446C
RN446B
RN447A
RN447C
RN447B
RN312D
RN312A
RN313A
RN313D
RN446D
RN447D
TO RADIO COMPASS CIRCUIT
RN56B
RN56C
1000Ω
RN57C
RN57B
RA5A
RA5B
RA5C
510Ω
RA6C
RA6B
RA6A
RAI9A
RAI9B
RAI9C
510Ω
RA20C
RA20B
RA20A
RNI93A
G
RNI94A
RNI97A
RNI98A
RNI99A
RN206A
RN207A
RN85C
RN85B
RA7B
RA7A
RA8B
RA8A
RA9B
RA9A
RAI0B
RAI0A
RAIIB
RAIIA
RAI2B
RAI2A
RAI3B
RAI3A
RAI4B
RAI4A
RAI5B
RAI5A
RAI6B
RAI6A
RA22B
RA22A
RA4A
RA4B
RA27A
RA27B
RM704B
RM704A
RM704C
RN90B
RN90D
RN193A20
RN194A20
RN55D20
RN192A20
RN192B20
1250 MMF
RN85B20
1250 MMF
RNI19A20
RN55C20
RNI18A20
1750 MMF
RNI18B20
RN54C20
5 2 3 4 11 12 1 6
+28V DC OUT — RN5IAI6
+28V DC IN — RNI05BI6
PWR REL GRD — RNI06A20
GROUND — RN79A20

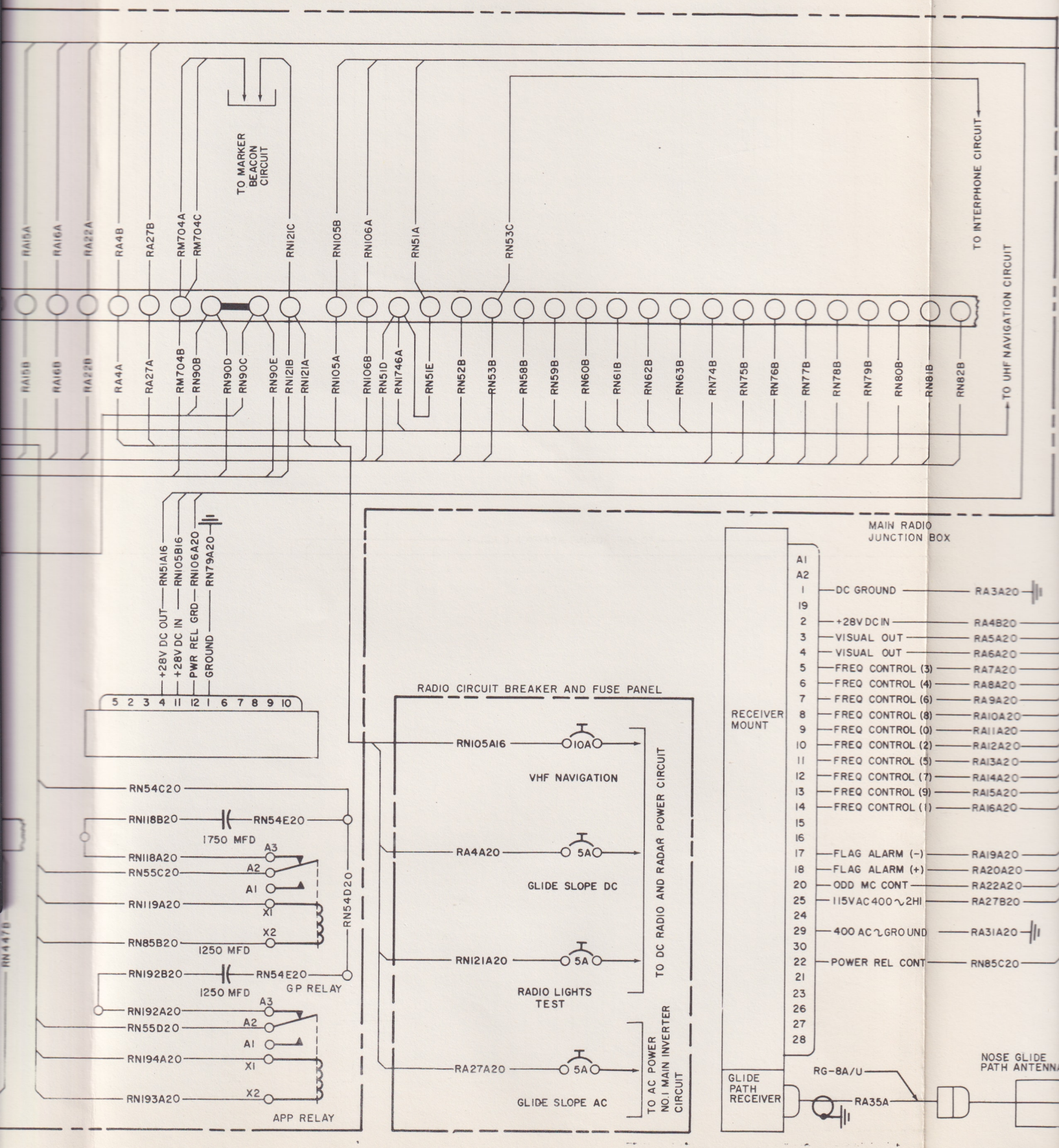

Figure 3-6. Radio Receiving Set AN/ARN-18 System Intercabling

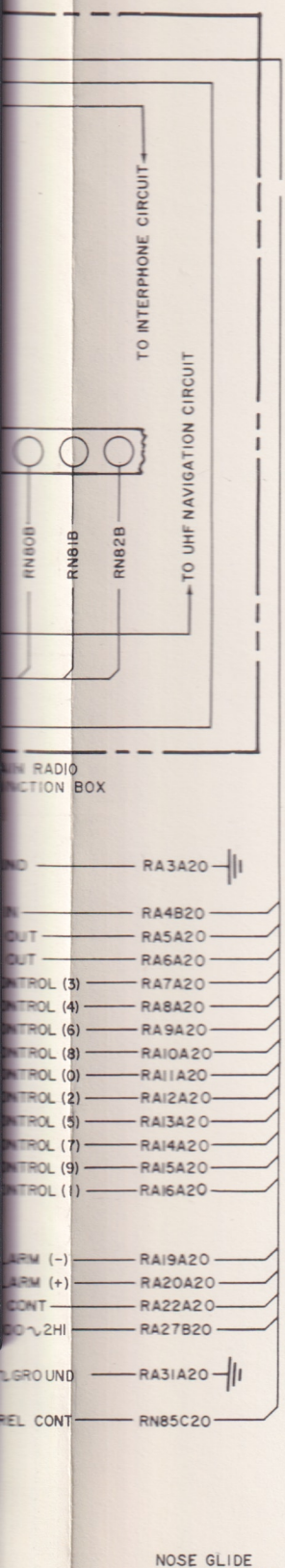
TO INTERPHONE CIRCUIT
TO UHF NAVIGATION CIRCUIT
RN80B
RN81B
RN82B
RADIO
BOX
RA3A20
RA4B20
RA5A20
RA6A20
RA7A20
RA8A20
RA9A20
RA10A20
RA11A20
RA12A20
RA13A20
RA14A20
RA15A20
RA16A20
RA19A20
RA20A20
RA22A20
RA27B20
RA31A20
RN85C20
NOSE GLIDE
PATH ANTENNA

3.2 0-10-20

SECTION IV

RADIO RECEIVING SET AN/ARN-5B

4–1. DESCRIPTION AND LEADING PARTICULARS.

4–2. This section comprises maintenance instructions for radio receiving set AN/ARN-5B, installed in SA-16A and SA-16B aircraft. (See figure 4–1.) The set provides for continuous, visual indication of the aircraft's position relative to the established glide slope during instrument landing operations. Principal components of the set are a receiver, antenna, and course indicator ID-249A/ARN and control unit

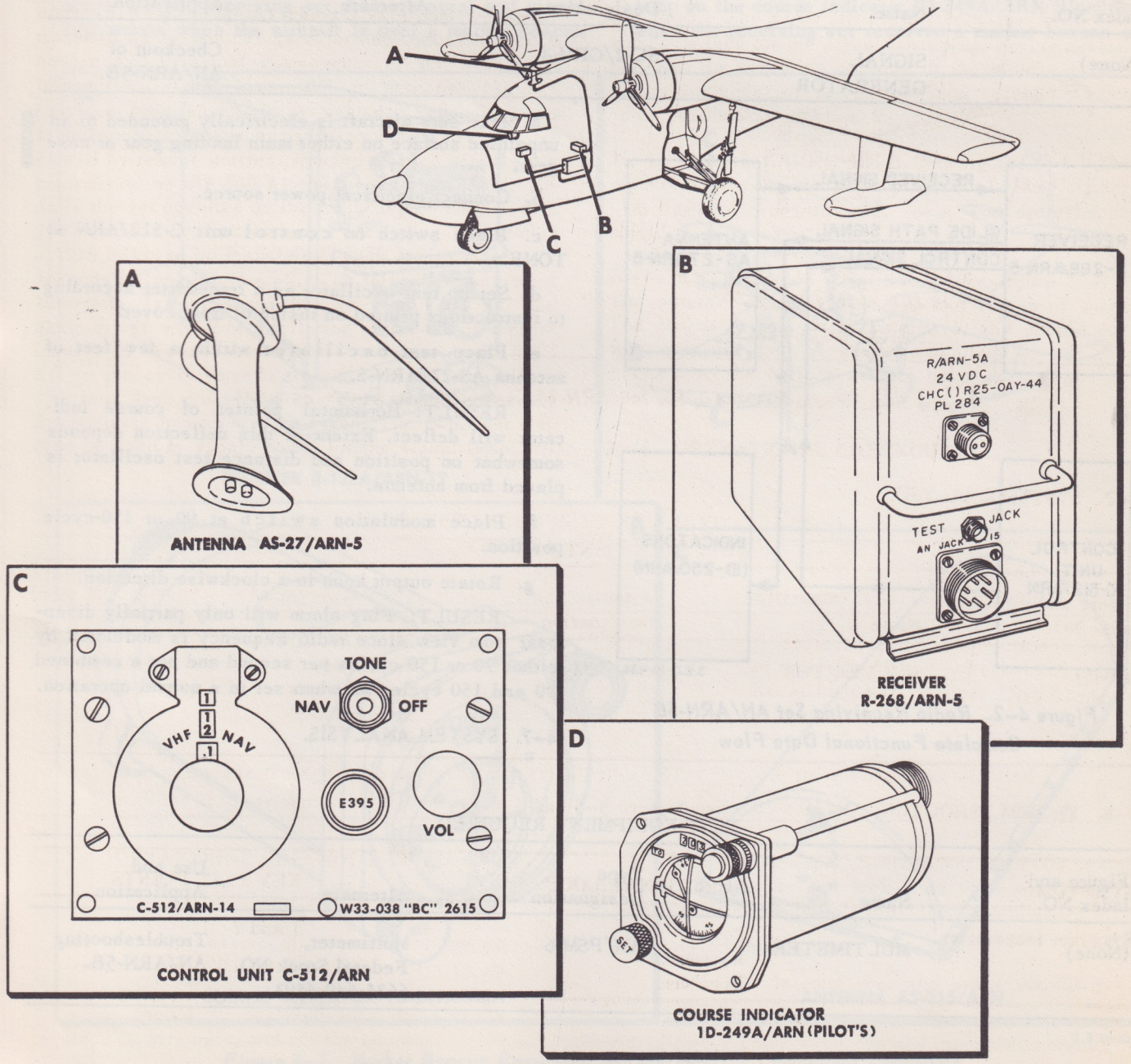

Figure 4–1. Radio Receiving Set AN/ARN-5B Component Locations

32.0-10-134

C-512/ARN which are part of radio receiving set AN/ARN-14. Figure 4–2 illustrates complete data flow.

4–3. RECEIVER R-268/ARN-5. (See figure 4–3.) The radio receiver is a superheterodyne type which receives, amplifies, and converts glide slope signals into control signals that operate the horizontal pointer and flag alarm in the course indicator. The receiver is located at the radio operator's station on the top shelf. The receiver receives crystal controlled frequencies between 332.6 and 335.0 MC and is controlled from the control panel of radio set AN/ARN-14.

4–4. ANTENNA AS-27/ARN-5. (See figure 4–3.) The antenna is located on top of the fuselage at station 162.

4–5. OPERATIONAL CHECKOUT.

4–6. OPERATIONAL CHECKOUT OF AN/ARN-5B.

TEST EQUIPMENT REQUIRED

Figure and Index NO.	Name	Type Designation	Alternate	Use and Application
(None)	SIGNAL GENERATOR	SC-2/GRM-4		Checkout of AN/ARN-5B.

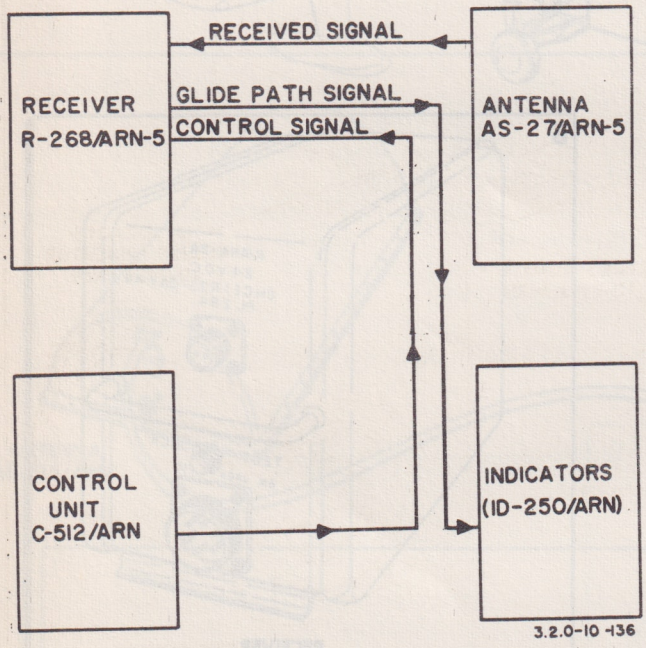

Figure 4–2. Radio Receiving Set AN/ARN-5B Complete Functional Data Flow

a. Make sure aircraft is electrically grounded to an unpainted surface on either main landing gear or nose gear.

b. Connect electrical power source.

c. Place switch on control unit C-512/ARN at TONE.

d. Set up test oscillator as a transmitter according to instructions printed on inside of front cover.

e. Place test oscillator within a few feet of antenna AS-27/ARN-5.

RESULT: Horizontal pointer of course indicator will deflect. Extent of this deflection depends somewhat on position and distance test oscillator is placed from antenna.

f. Place modulation switch at 90 or 150-cycle position.

g. Rotate output knob in a clockwise direction.

RESULT: Flag alarm will only partially disappear from view since radio frequency is modulated by either 90 or 150 cycles per second and not a combined 90 and 150 cycles as when set in a normal operation.

4–7. SYSTEM ANALYSIS.

TEST EQUIPMENT REQUIRED

Figure and Index NO.	Name	Type Designation	Alternate	Use and Application
(None)	MULTIMETER	AN/PSM-6	Multimeter, Federal Stock NO. 6625-649-4593	Troubleshooting AN/ARN-5B.

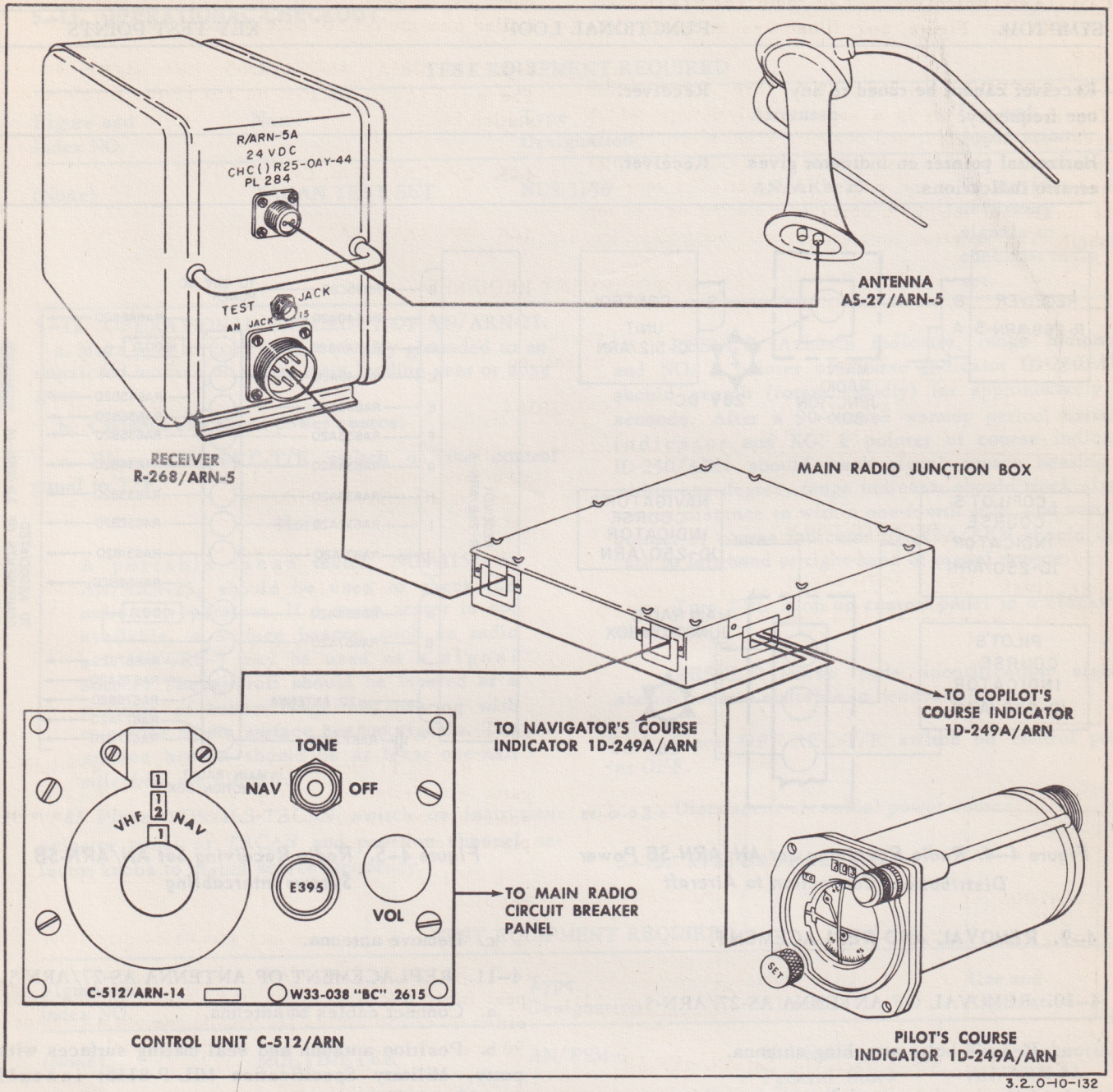

Figure 4–3. Radio Receiving Set AN/ARN-5B Cabling Diagram

4–8. TROUBLESHOOTING AN/ARN-5B. (See figures 4–4 and 4–5.)

SYMPTOM	FUNCTIONAL LOOP	KEY TEST POINT
Receiver completely inoperative.	D-C power. Antenna. Receiver.	1 and 2
Flag alarm on indicator visible at all times.	Receiver.	

SYMPTOM	FUNCTIONAL LOOP	KEY TEST POINTS
Receiver cannot be tuned to any one frequency.	Receiver.	
Horizontal pointer on indicator gives erratic indications.	Receiver.	

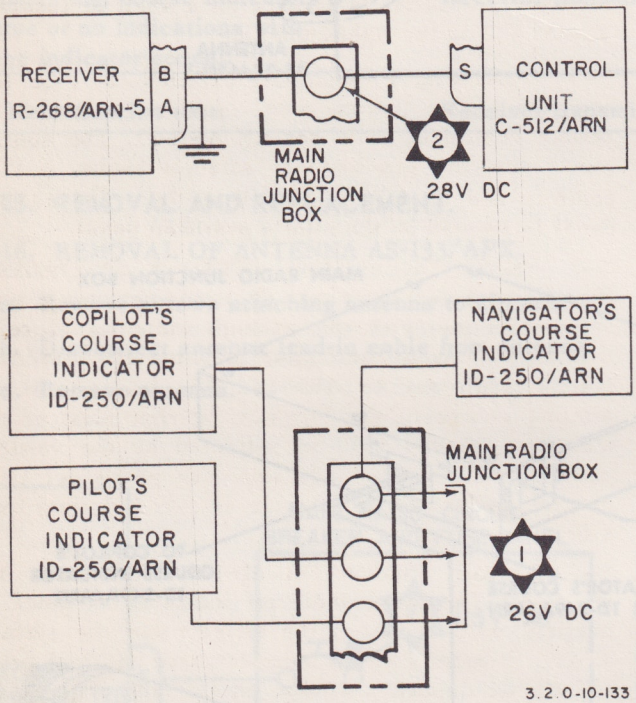

Figure 4–4. Radio Receiving Set AN/ARN-5B Power Distribution, Connection to Aircraft

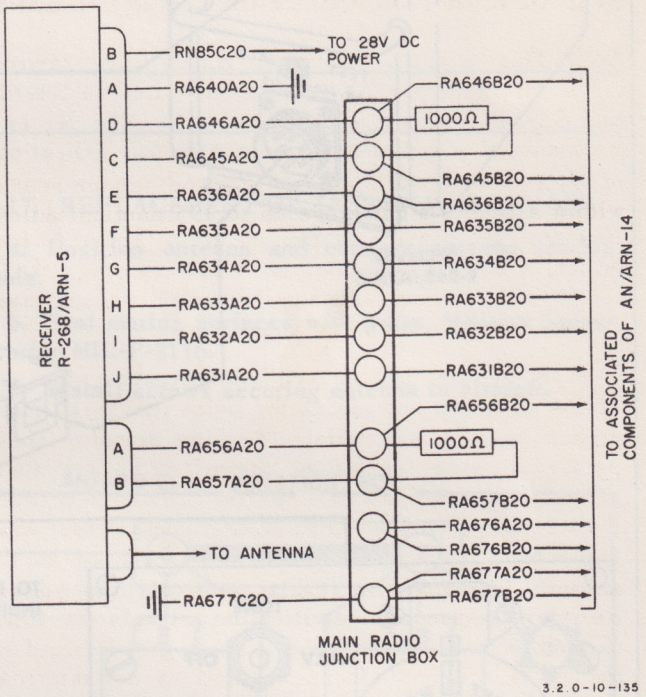

Figure 4–5. Radio Receiving Set AN/ARN-5B System Intercabling

4–9. REMOVAL AND REPLACEMENT.

4–10. REMOVAL OF ANTENNA AS-27/ARN-5.

a. Remove bolts attaching antenna.

b. Lift up antenna and disconnect cables.

c. Remove antenna.

4–11. REPLACEMENT OF ANTENNA AS-27/ARN-5.

a. Connect cables to antenna.

b. Position antenna and seal mating surfaces with putty, Military Specification MIL-P-8116; install attaching bolts.

SECTION V

RADIO SET AN/ARN-21

5-1. DESCRIPTION AND LEADING PARTICULARS.

5-2. This section comprises maintenance instructions for radio set AN/ARN-21 installed in SA-16A and SA-16B aircraft. (See figure 5-1.) The set is a navigational aid that provides continuous indications of distance and bearing in relation to a surface beacon within a line-of-sight range up to 195 nautical miles. Principal components of the set are a receiver-transmitter, a control panel, a phase detecting network, a range indicator, an azimuth indicator, two antennas, and an instrument selector panel.

5-3. A surface beacon continuously transmits a series of coded and modulated pulses to provide reference bearing and variable bearing signals. These pulses are detected by the aircraft radio set where azimuth circuits measure the phase difference between the reference bearing and variable signals. This phase difference is further prepared and displayed on the azimuth indicator. At regular intervals the surface beacon transmits identification signals in international morse code. These signals are detected by the radio set, reproduced and fed to the intercommunication system as a keyed audio tone. Distance information is obtainable by an interrogation process. The process is initiated by transmission of distance interrogation pulse signals by the transmitter portion of radio set AN/ARN-21. The surface beacon receiver detects these interrogation signals and causes the surface beacon transmitter to respond with distance reply signals. The distance reply signals are detected by the receiver portion of the aircraft radio set. Range circuits measure the elapsed time between transmission of the interrogation signals and reception of the reply signals. This time difference is displayed on the range indicator in nautical miles. Figure 5-2 illustrates complete system data flow.

5-4. RECEIVER-TRANSMITTER RT-220/ARN-21. (See figure 5-3.) The transmitter portion of the receiver-transmitter transmits distance interrogation signals and is capable of sending on 126 channels, spaced one MC apart, in the 1025 to 1150 MC band. The receiver portion of the receiver-transmitter receives distance, bearing, and identification signals and is capable of receiving on 126 channels, spaced one MC apart, in the 962 to 1024 and 1151 to 1213 MC bands. The receiver-transmitter consists of a front panel assembly and eleven removable subunits. The receiver-transmitter is located on a shelf at fuselage station 332 on the right-hand side.

5-5. CONTROL PANEL C-1763/ARN-21. (See figure 5-3.) The control panel provides a means for remote control of radio set AN/ARN-21. The control panel contains two channel selector knobs, a VOL control, and an OFF-REC-T/R switch. The control panel is located on the pilot's overhead panel.

5-6. PHASE DETECTING NETWORK CV-279/ARN. (See figure 5-3.) The phase detecting network is used in conjunction with the azimuth indicator to relay bearing signals to the course indicator ID-249A/ARN (part of radio set AN/ARN-14). The deviation of the aircraft course to the left-hand or right-hand of the surface beacon will be indicated by the vertical pointer of the course indicator. The phase detecting network is located at fuselage station 175 right-hand side.

5-7. RANGE INDICATOR ID-310/ARN. (See figure 5-3.) The range indicator indicates distance in nautical miles between the aircraft and the surface beacon. Numerals which indicate these nautical miles are visible through a window on the face of the indicator and are electronically controlled by range circuits in the receiver-transmitter. The maximum range of the indicator is 195 nautical miles. To prevent the pilot from reading incorrect indications while the indicator is searching, the numbers are partially covered by a red flag. The range indicator is located on the pilot's instrument panel.

5-8. AZIMUTH INDICATOR ID-307/ARN. (See figure 5-3.) The azimuth indicator has a dial face calibrated from zero to 360 degrees. A single pointer, controlled by azimuth circuits in the receiver-transmitter, provides a bearing indication of the aircraft from a surface beacon. While the indicator is searching, the pointer rotates at such a rate that bearing readings cannot be taken. The indicator feeds bearing signals to the phase detecting network and relays bearing signals to the course indicator ID-250/ARN (part of radio receiving set AN/ARN-14). The azimuth indicator is located at fuselage station 332 right-hand side.

5-9. ANTENNAS RD-R-1010-3 AND AS-133/APX. (See figure 5-3.) Two antennas are used with the radio set. The forward antenna RD-R-1010-3 is located on top of the flight compartment in front of the wire

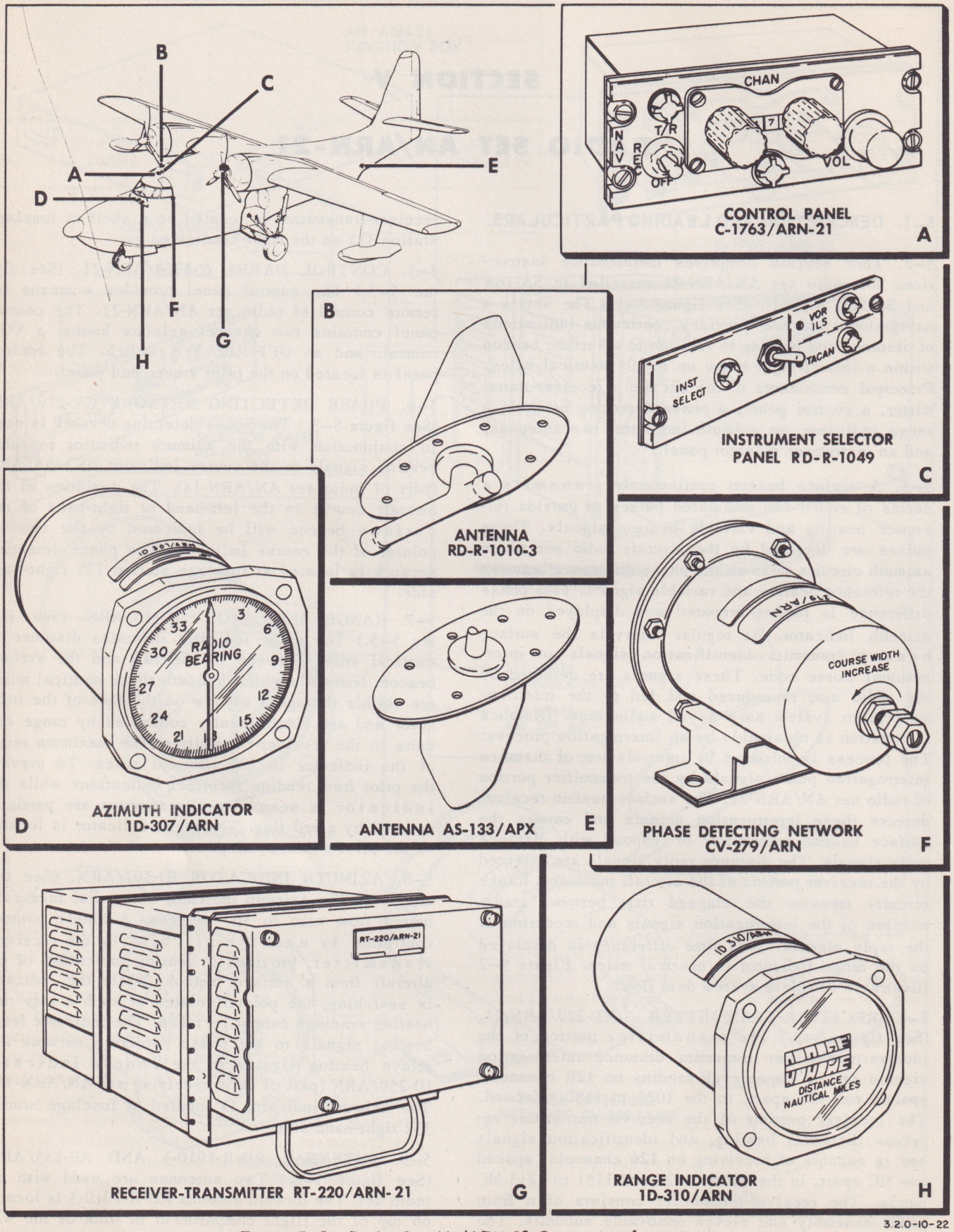

Figure 5–1. Radio Set AN/ARN-21 Component Locations

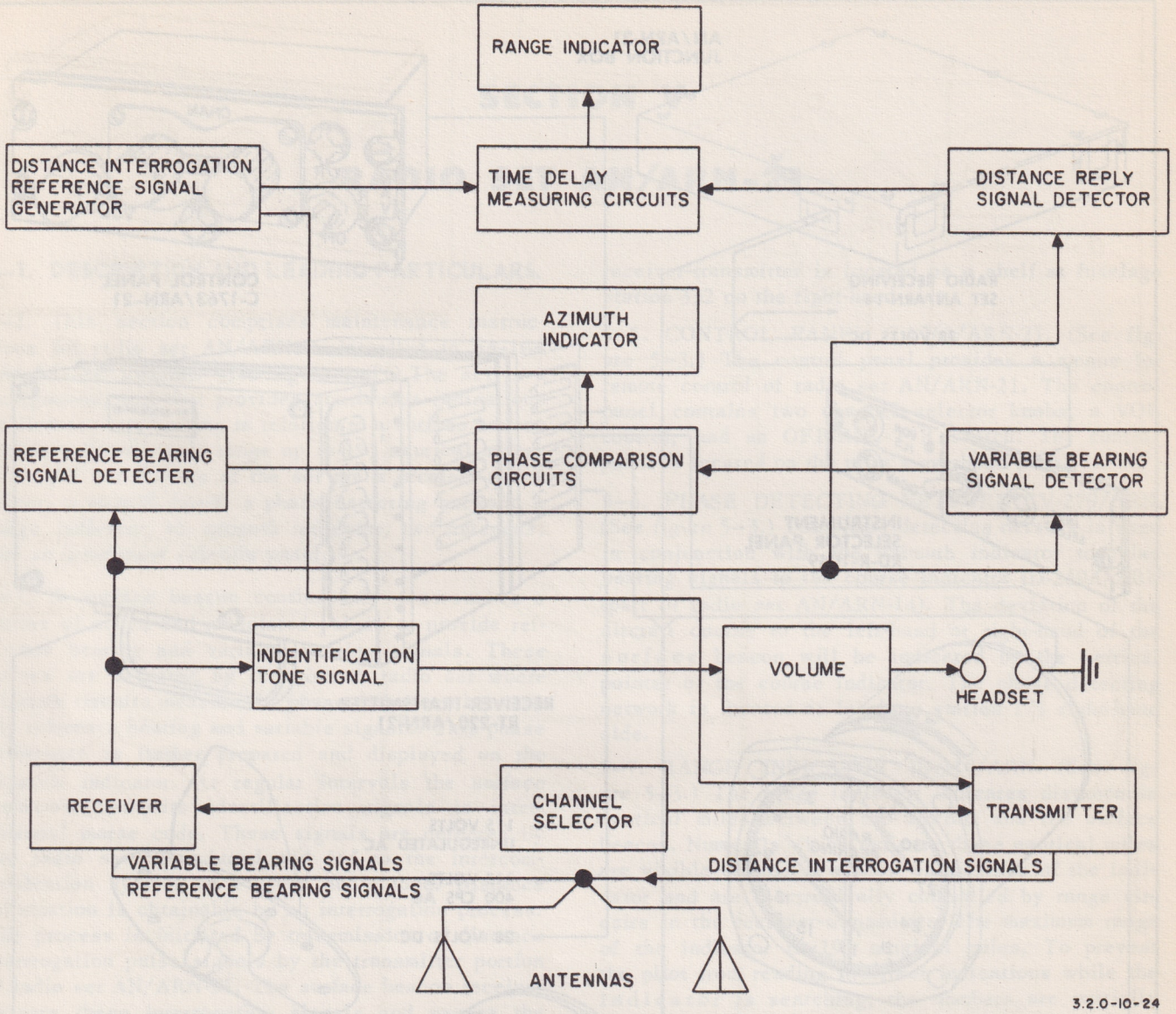

Figure 5–2. Radio Set AN/ARN-21 Complete Functional Data Flow

antennas support mast, and the aft antenna AS-133/APX, is located beneath a fairing on the underside of the fuselage at station 614. The antennas are electrically connected by a tee connector. A single transmission line runs from the tee connector to the receiver-transmitter. This two-antenna installation provides for uninterrupted reception of signals regardless of the altitude of the aircraft in relation to the surface beacon.

5–10. INSTRUMENT SELECTOR PANEL RD-R-1049. (See figure 5–3.) The instrument selector panel contains the instrument selector switch and the VOR/ILS-TACAN indicator lights. When VOR/ILS indications are desired on the ID-249A/ARN and the ID-250/ARN course indicators, the instrument selector switch should be set to the VOR/ILS position. This action provides a circuit through holding coils of the four indicator switching relays located in the AN/ARN-21 junction box. Setting the switch to the TACAN position, deenergizes the holding coils of these relays. The course indicators then provide visual omnirange and instrument landing system information. The instrument selector panel is located on the right-hand side of the overhead console.

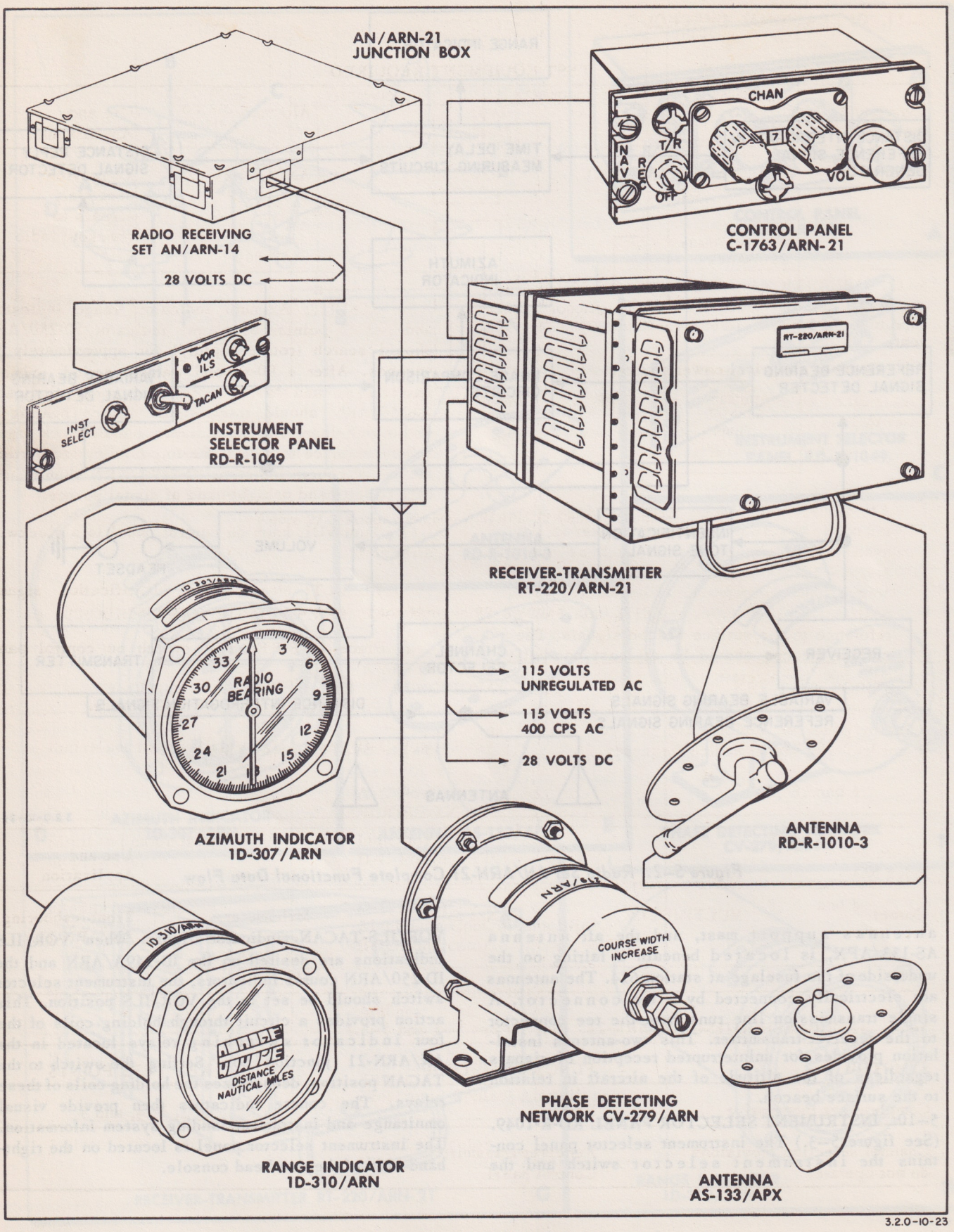

Figure 5–3. Radio Set AN/ARN-21 Cabling Diagram

5-11. OPERATIONAL CHECKOUT.

TEST EQUIPMENT REQUIRED

Figure and Index NO.	Name	Type Designation	Alternate	Use and Application
(None)	TACAN TEST SET	NUS-3156	AN/ARN-25	To provide necessary signals to checkout radio set.

5-12. OPERATIONAL CHECKOUT OF AN/ARN-21.

a. Make sure aircraft is electrically grounded to an unpainted surface on either main landing gear or nose gear.

b. Connect electrical power source.

c. Place OFF-REC-T/R switch on the control panel to T/R.

Note

A portable tacan tester, NUS-3156 or AN/ARN-25, should be used to check the radio set operation. If a tacan tester is not available, a surface beacon such as radio set AN/URN-3 may be used as a signal source. The aircraft should be located at a position of known range and bearing with reference to the surface beacon signals. The surface beacon should be at least one-half mile from the aircraft.

d. Place VOR/ILS-TACAN switch on instrument selector panel at TACAN and position channel selector knobs to signal source frequency.

RESULT: Azimuth indicator, range indicator, and NO. 2 pointer of course indicator ID-250/ARN should search (rotate rapidly) for approximately 90 seconds. After a 90-second warmup period, azimuth indicator and NO. 2 pointer of course indicator ID-250/ARN should track signal source bearing to within one degree, range indicator should track signal source distance to within one-fourth mile, and vertical pointer of course indicator ID-249A/ARN should indicate to left-hand or right-hand of signal source.

e. Turn VOL knob on control panel in a clockwise direction.

RESULT: Morse code identification signals should become audiable in headsets.

f. Place OFF-REC-T/R switch on control panel at OFF.

g. Disconnect electrical power source.

5-13. SYSTEM ANALYSIS.

TEST EQUIPMENT REQUIRED

Figure and Index NO.	Name	Type Designation	Alternate	Use and Application
(None)	MULTIMETER	AN/PSM-6	Multimeter, Federal Stock NO. 6625-649-4593	Troubleshooting AN/ARN-21.

5-14. TROUBLESHOOTING AN/ARN-21. (See figures 5-4 and 5-5.)

SYMPTOM	FUNCTIONAL LOOP	KEY TEST POINTS
Complete set inoperative.	Power.	1, 2, 3, 4, and 5
Channel selection provisions do not operate.	Receiver-transmitter. Control panel.	

SYMPTOM	FUNCTIONAL LOOP	KEY TEST POINTS
All indicators search continuously with identification tone loud and clear.	Receiver-transmitter.	
Course indicator ID-249A/ARN untrue or no indications.	Phase detecting network. Course indicators.	
Azimuth and course indicators untrue or no indications with range indicator normal.	Receiver-transmitter.	
No identification tone.	Receiver-transmitter.	

5-15. REMOVAL AND REPLACEMENT.

5-16. REMOVAL OF ANTENNA AS-133/APX.

a. Remove screws attaching antenna to aircraft.

b. Disconnect antenna lead-in cable from antenna.

c. Remove antenna.

5-17. REPLACEMENT OF ANTENNA AS-133/APX.

a. Position antenna and connect antenna lead-in cable.

b. Seal mating surfaces with putty, Military Specification MIL-P-8116.

c. Install screws securing antenna to aircraft.

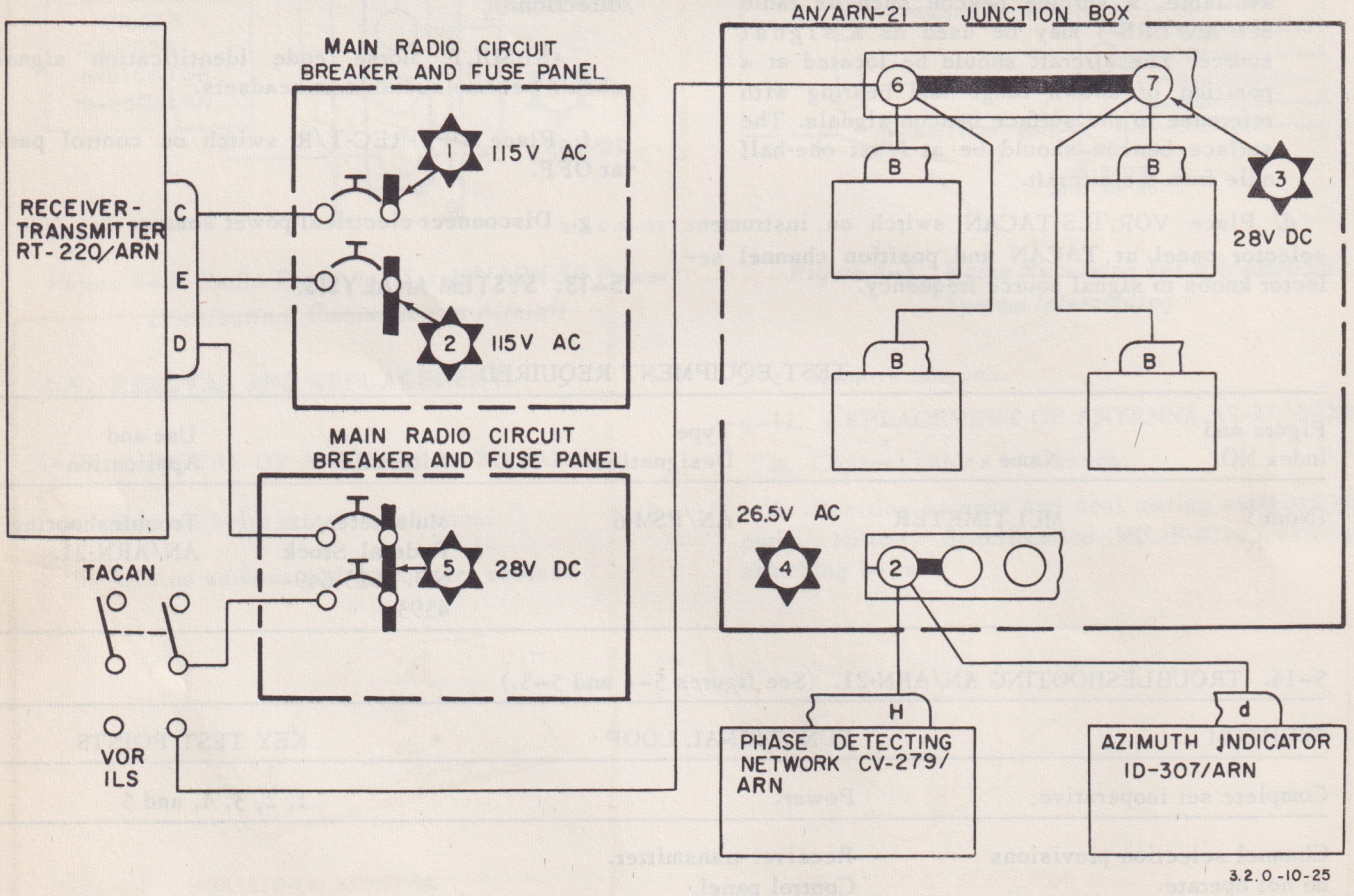

Figure 5-4. Radio Set AN/ARN-21 Power Distribution, Connection to Aircraft

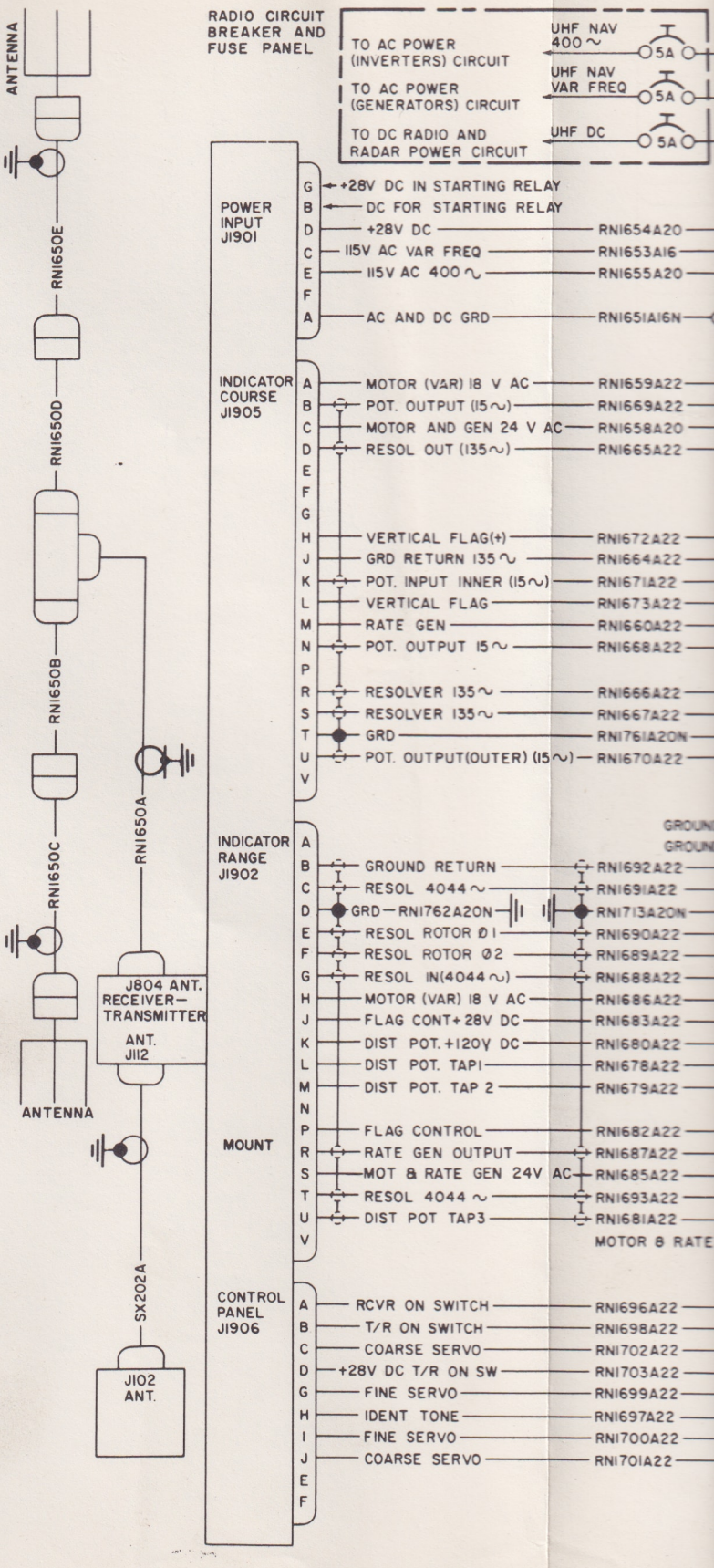

Figure 5–5. Radio Set AN/ARN-21 Sy

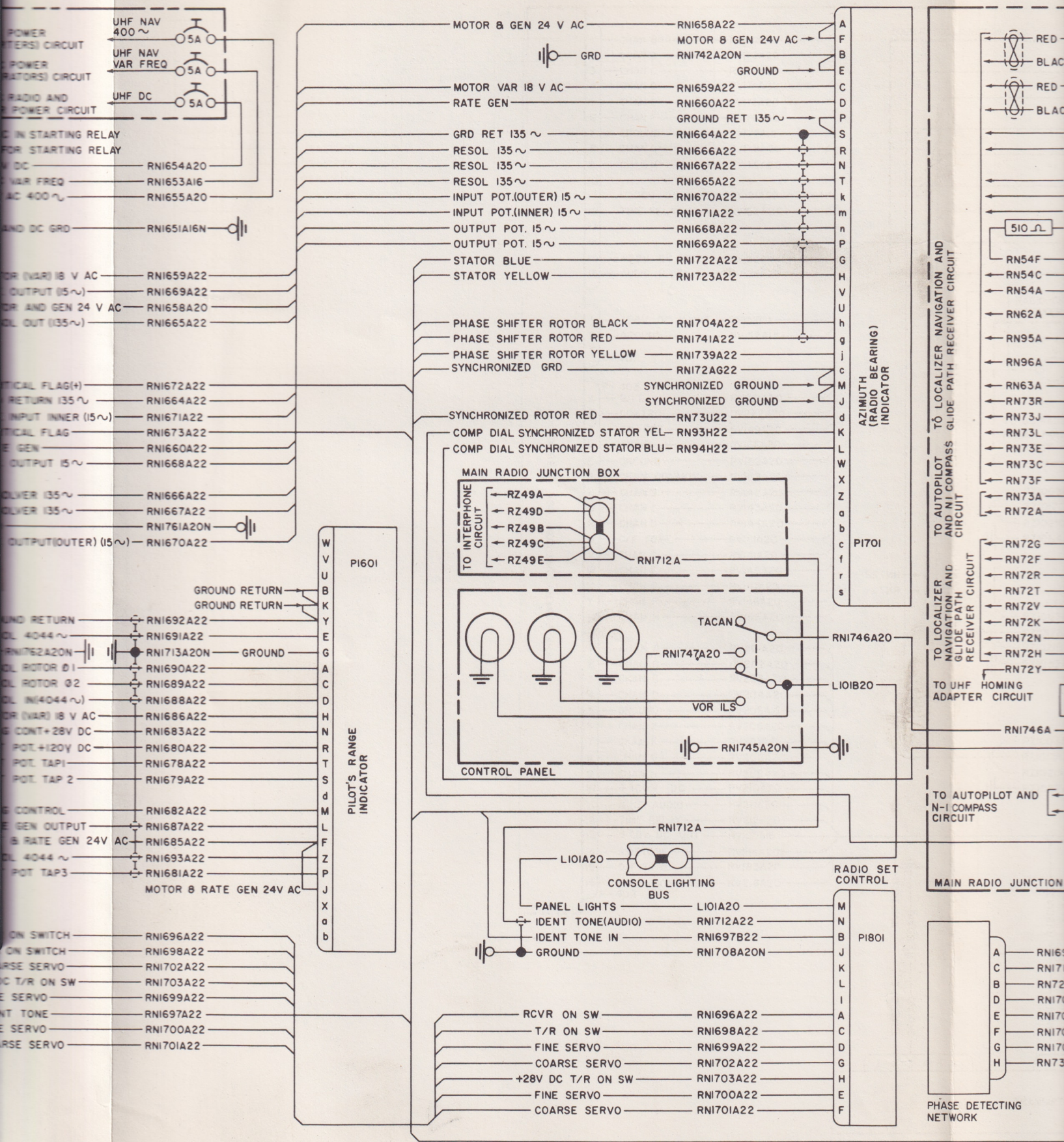

5. Radio Set AN/ARN-21 System Intercabling

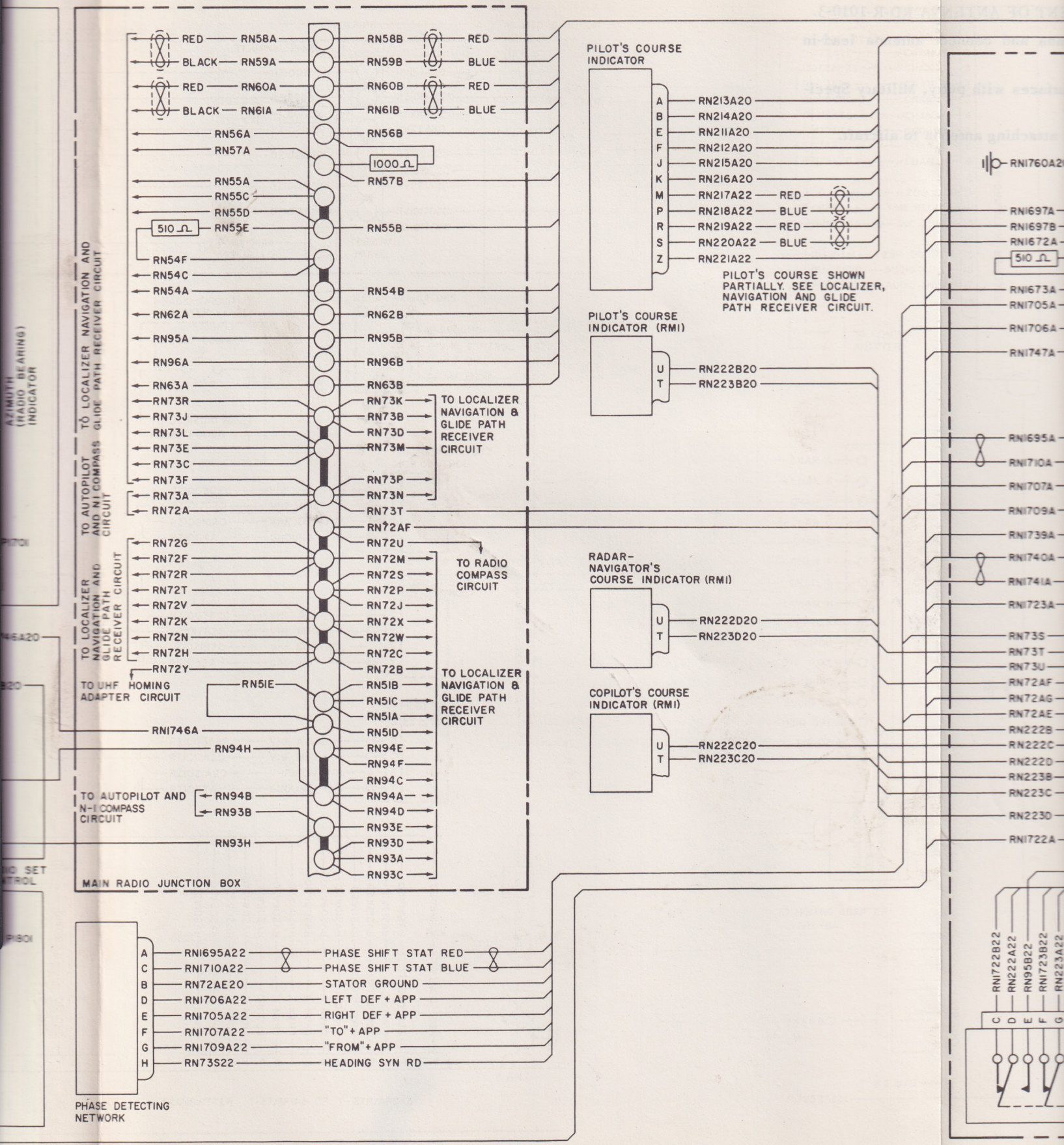
RED RN58A
BLACK RN59A
RED RN60A
BLACK RN61A
RN56A
RN57A
RN55A
RN55C
RN55D
510
RN55E
RN54F
RN54C
RN54A
RN62A
RN95A
RN96A
RN63A
RN73R
RN73J
RN73L
RN73E
RN73C
RN73F
RN73A
RN72A
RN72G
RN72F
RN72R
RN72T
RN72V
RN72K
RN72N
RN72H
RN72Y
RN5IE
RNI746A
RN94H
RN94B
RN93B
RN93H
RN58B RED
RN59B BLUE
RN60B RED
RN61B BLUE
RN56B
1000
RN57B
RN55B
RN54B
RN62B
RN95B
RN96B
RN63B
RN73K
RN73B
RN73D
RN73M
RN73P
RN73N
RN73T
RN72AF
RN72U
RN72M
RN72S
RN72P
RN72J
RN72X
RN72W
RN72C
RN72B
RN5IB
RN5IC
RN5IA
RN5ID
RN94E
RN94F
RN94C
RN94A
RN94D
RN93E
RN93D
RN93A
RN93C
TO LOCALIZER NAVIGATION & GLIDE PATH RECEIVER CIRCUIT
TO RADIO COMPASS CIRCUIT
TO LOCALIZER NAVIGATION & GLIDE PATH RECEIVER CIRCUIT
TO AUTOPILOT AND N-I COMPASS CIRCUIT
TO LOCALIZER NAVIGATION AND GLIDE PATH RECEIVER CIRCUIT
TO UHF HOMING ADAPTER CIRCUIT
TO AUTOPILOT AND N-I COMPASS CIRCUIT
MAIN RADIO JUNCTION BOX
PILOT'S COURSE INDICATOR
A RN213A20
B RN214A20
E RN211A20
F RN212A20
J RN215A20
K RN216A20
M RN217A22 RED
P RN218A22 BLUE
R RN219A22 RED
S RN220A22 BLUE
Z RN221A22
PILOT'S COURSE SHOWN PARTIALLY. SEE LOCALIZER, NAVIGATION AND GLIDE PATH RECEIVER CIRCUIT.
PILOT'S COURSE INDICATOR (RMI)
U RN222B20
T RN223B20
RADAR-NAVIGATOR'S COURSE INDICATOR (RMI)
U RN222D20
T RN223D20
COPILOT'S COURSE INDICATOR (RMI)
U RN222C20
T RN223C20
RNI760A2
RNI697A
RNI697B
RNI672A
510
RNI673A
RNI705A
RNI706A
RNI747A
RNI695A
RNI710A
RNI707A
RNI709A
RNI739A
RNI740A
RNI741A
RNI723A
RN73S
RN73T
RN73U
RN72AF
RN72AG
RN72AE
RN222B
RN222C
RN222D
RN223B
RN223C
RN223D
RNI722A
A RNI695A22 PHASE SHIFT STAT RED
C RNI710A22 PHASE SHIFT STAT BLUE
B RN72AE20 STATOR GROUND
D RNI706A22 LEFT DEF + APP
E RNI705A22 RIGHT DEF + APP
F RNI707A22 "TO" + APP
G RNI709A22 "FROM" + APP
H RN73S22 HEADING SYN RD
PHASE DETECTING NETWORK
RNI722B22
RN222A22
RN95B22
RNI723B22
RN223A22
C D E F G

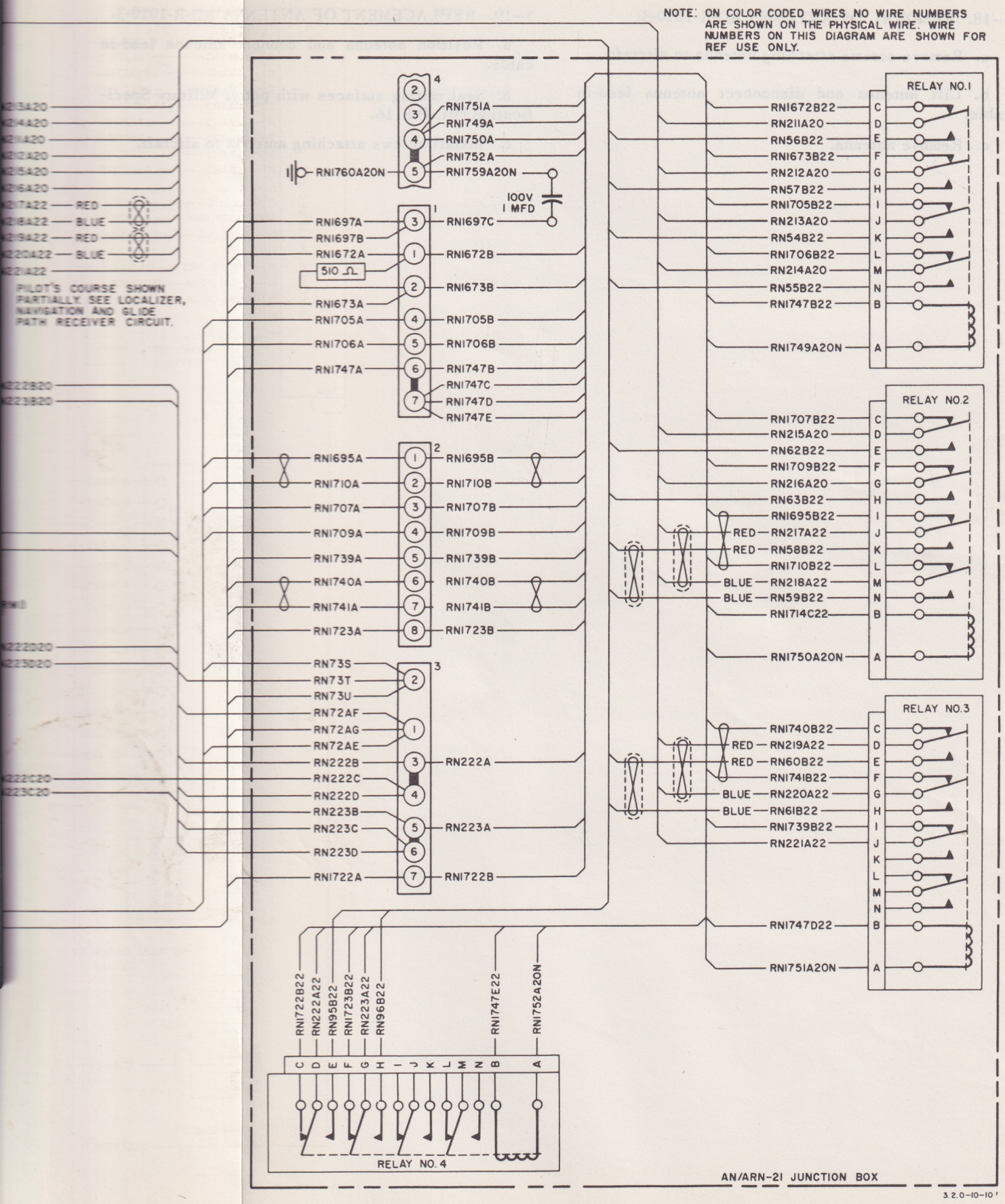
NOTE: ON COLOR CODED WIRES NO WIRE NUMBERS ARE SHOWN ON THE PHYSICAL WIRE. WIRE NUMBERS ON THIS DIAGRAM ARE SHOWN FOR REF USE ONLY.
PILOT'S COURSE SHOWN PARTIALLY. SEE LOCALIZER, NAVIGATION AND GLIDE PATH RECEIVER CIRCUIT.
RED
BLUE
RED
BLUE
100V 1 MFD
510
RELAY NO.1
RELAY NO.2
RELAY NO.3
RELAY NO. 4
AN/ARN-21 JUNCTION BOX
3.2.0-10-10

5–18. REMOVAL OF ANTENNA RD-R-1010-3.

a. Remove screws attaching antenna to aircraft.

b. Lift antenna and disconnect antenna lead-in cable.

c. Remove antenna.

5–19. REPLACEMENT OF ANTENNA RD-R-1010-3.

a. Position antenna and connect antenna lead-in cable.

b. Seal mating surfaces with putty, Military Specification MIL-P-8116.

c. Install screws attaching antenna to aircraft.

SECTION VI

MARKER BEACON RECEIVING SET AN/ARN-12

6–1. DESCRIPTION AND LEADING PARTICULARS.

6–2. This section comprises maintenance instructions for the marker beacon receiving set AN/ARN-12, installed in SA-16A and SA-16B aircraft. (See figure 6–1.) The receiving set delivers aural and visual indications when the aircraft is over a marker beacon transmitter. The receiving set furnishes an audible signal to the intercommunication set when the audio selector toggle switch at the pilot's interphone station is engaged and the receiving set is receiving transmitted signals from the marker beacon transmitter. A lamp on the course indicator ID-249A/ARN illuminates when the receiving set receives a marker beacon sig-

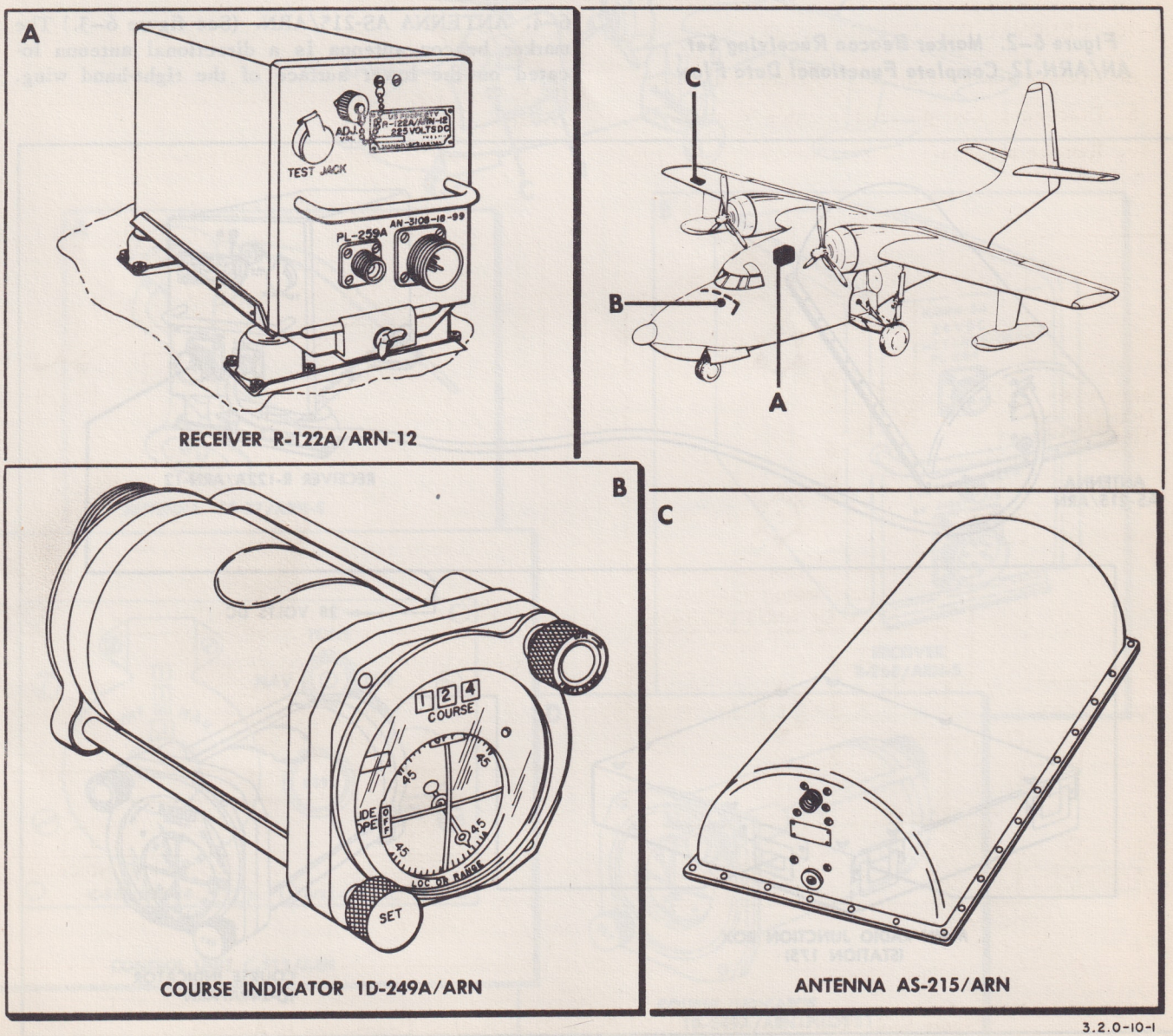

Figure 6–1. Marker Beacon Receiving Set AN/ARN-12 Component Locations

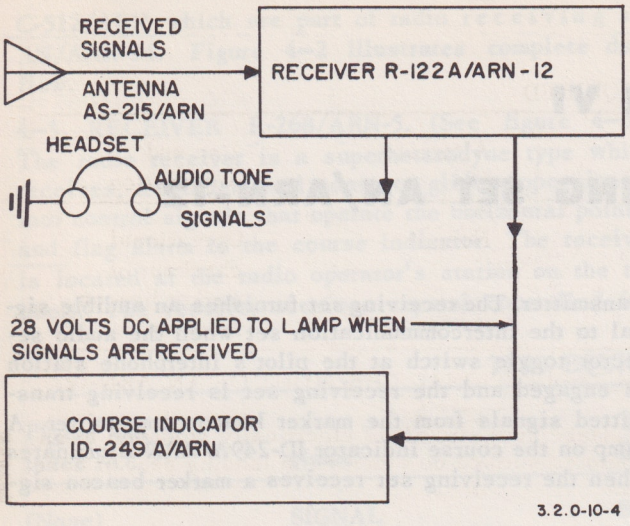

Figure 6–2. Marker Beacon Receiving Set AN/ARN-12 Complete Functional Data Flow

nal. Principal components of the receiving set are a receiver, an indicator lamp on the course indicator ID-249A/ARN, and an antenna. Figure 6–2 illustrates complete system data flow.

6–3. RECEIVER R-122A/ARN-12. (See figure 6–3.) The receiver R-122A/ARN-12 is a superheterodyne type receiver containing a controlled local oscillator, a mixer, two stages of I-F amplification, a second detector, an AVC stage, two stages of audio amplification, a push-pull output stage, a rectifier, and a D-C amplifier for the visual indicator. Sensitivity is regulated by a two-position switch. A relay actuates the lamp located on the course indicator ID-249A/ARN when signals are received from a beacon transmitter. The marker beacon receiver is located at the cabin bulkhead on the top shelf.

6–4. ANTENNA AS-215/ARN. (See figure 6–3.) The marker beacon antenna is a directional antenna located on the lower surface of the right-hand wing.

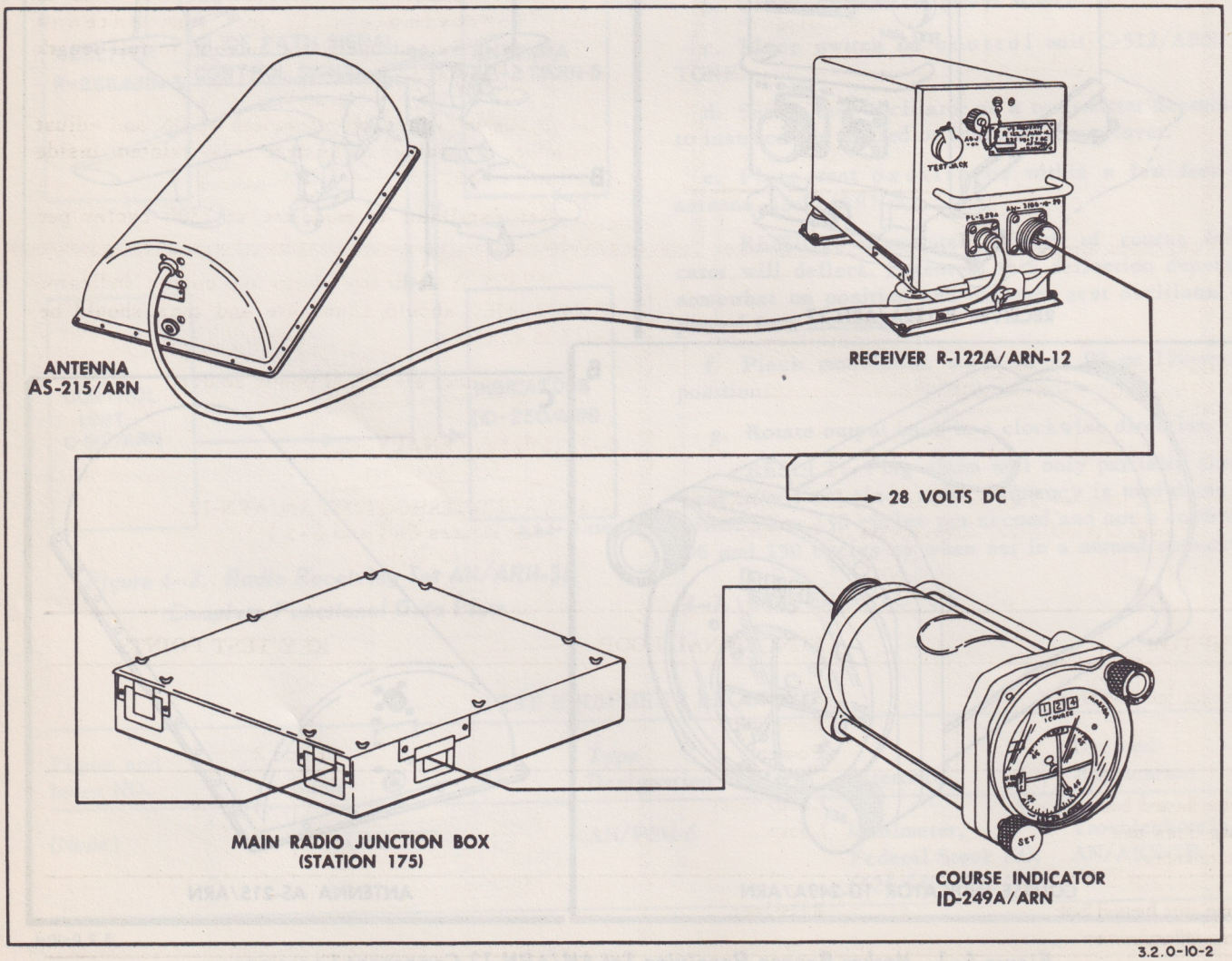

Figure 6–3. Marker Beacon Receiving Set AN/ARN-12 Cabling Diagram

6-5. OPERATIONAL CHECKOUT.

TEST EQUIPMENT REQUIRED

Figure and Index NO.	Name	Type Designation	Alternate	Use and Application
(None)	TEST OSCILLATOR	BC-376-H	None	Operational checkout of marker beacon receiver.

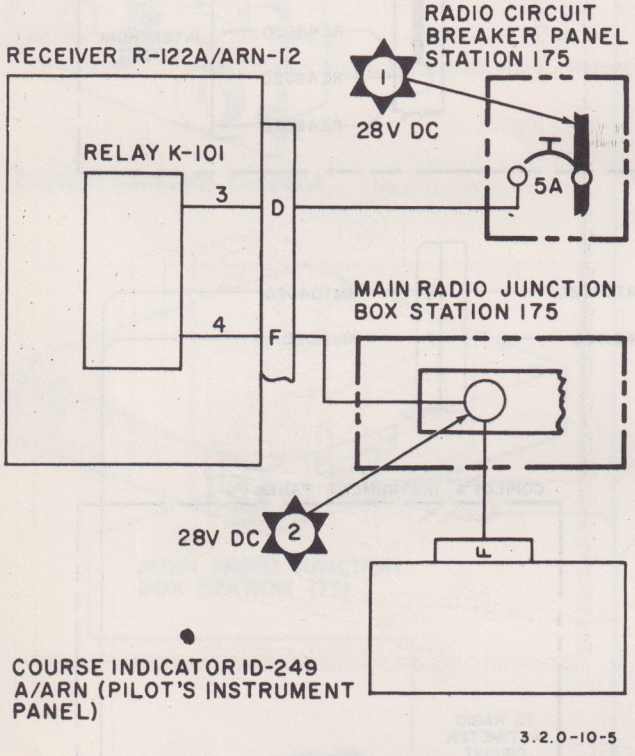

Figure 6-4. Marker Beacon Receiving Set AN/ARN-12 Power Distribution, Connection to Aircraft

6-6. OPERATIONAL CHECKOUT OF AN/ARN-12.

a. Make sure aircraft is electrically grounded to an unpainted surface on either main landing gear or nose gear.

b. Connect electrical power source.

c. Engage audio selector toggle switch at pilot's interphone station.

d. Place portable test oscillator BC-376-H on ground approximately 15 feet from antenna AS-215/ARN. Extend oscillator antenna to full length parallel to fuselage.

e. Place oscillator on-off switch at ON and adjust oscillator according to instructions printed inside oscillator cover.

f. Set oscillator to modulate at 1300 cycles per second.

RESULT: Indicator lamp on course indicator ID-249A/ARN should illuminate and tone should be heard in headset.

g. Disconnect electrical power source.

6-7. SYSTEM ANALYSIS.

6-8. TROUBLESHOOTING AN/ARN-12. (See figures 6-4 and 6-5.)

SYMPTOM	FUNCTIONAL LOOP	KEY TEST POINTS
System inoperative.	Antenna. Receiver. Power.	1 and 2
Tone heard but lamp does not illuminate.	Lamp relay. Lamp.	
Tone not heard but lamp illuminates.	Receiver.	

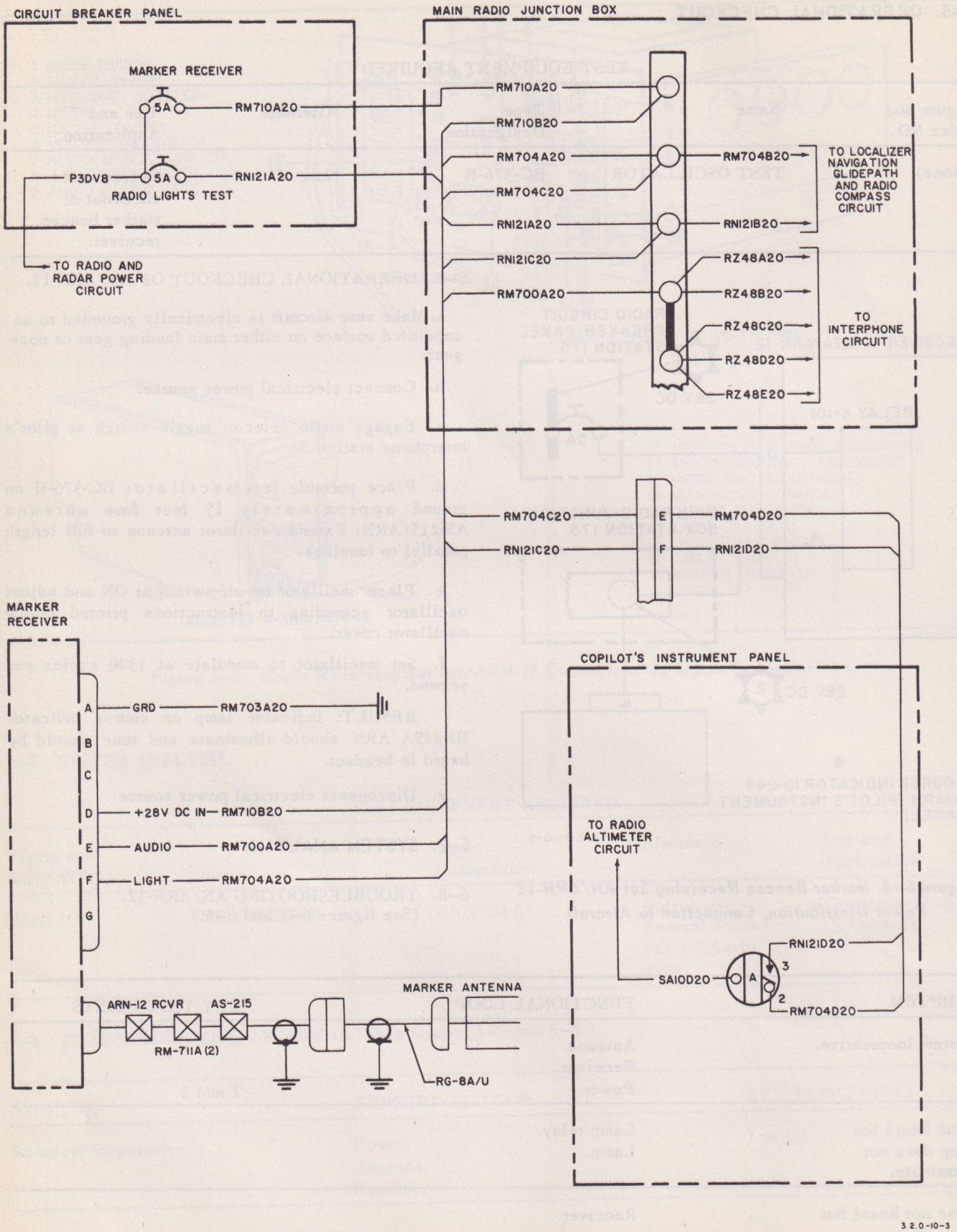

Figure 6–5. Marker Beacon Receiving Set AN/ARN-12 System Intercabling

6–9. REMOVAL AND REPLACEMENT.

6–10. REMOVAL OF ANTENNA AS-215/ARN.

a. Take out fiber glass panel by removing attaching screws.

b. Remove screw holding antenna. Lower unit and disconnect lead-in cable.

6–11. REPLACEMENT OF ANTENNA AS-215/ARN.

a. Connect lead-in cable to antenna and position so mounting holes are aligned; insert attaching screws.

b. Position fiber glass plate and secure with attaching screws.

6–12. ADJUSTMENT.

6–13. ADJUSTMENT OF R-122A/ARN-12. (See figure 6–3.) A screwdriver adjustment, located in the upper left-hand corner of R-122A/ARN front panel and decaled ADJ. VOL., is used to increase and decrease audio output level.

SECTION VII

MARKER BEACON RECEIVING SET RC-193A

7-1. DESCRIPTION AND LEADING PARTICULARS.

7-2. This section comprises maintenance instructions for marker beacon receiving set RC-193A, installed on SA-16A and SA-16B aircraft. (See figure 7-1.) The set operates on 75 MC and is used in the aircraft as a navigational and landing aid. The marker beacon receiver furnishes the pilot with an aural presentation in the headset and a visual indication by means of the indicator lamp when the aircraft passes over a 75 MC marker beacon transmitter. The equipment receives its power from the aircraft 28-volt D-C system. Principal components of the set are a radio receiver, antenna, and indicator lamp. Figure 7-2 illustrates complete system data flow.

7-3. RADIO RECEIVER BC-1333. (See figure 7-3.)

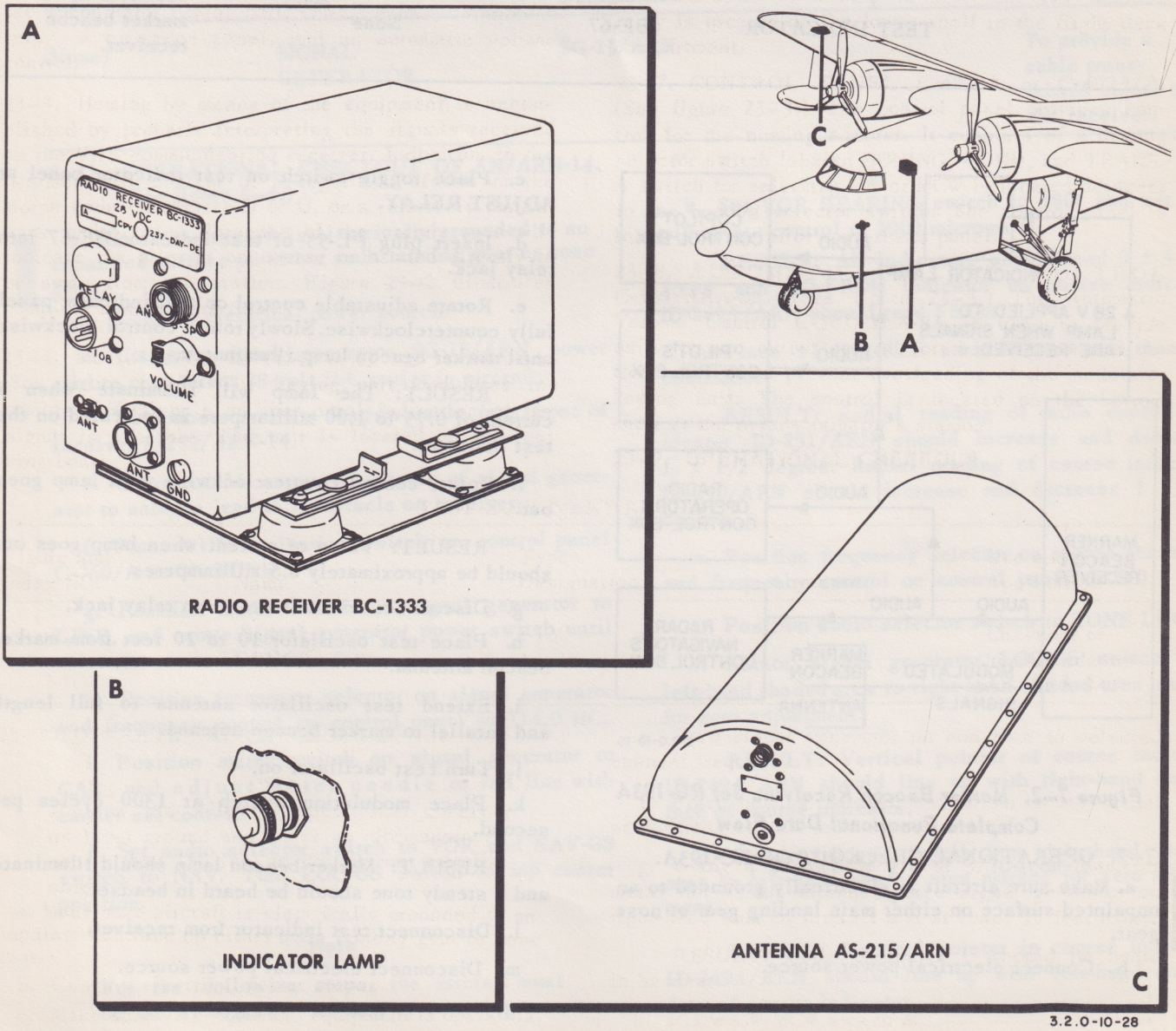

Figure 7-1. Marker Beacon Receiving Set RC-193A Component Locations

Upon reception of the modulated frequency from the marker beacon transmitter, the receiver turns on and no tuning is required. The receiver feeds an audio signal to the headset and supplies power to illuminate the indicator lamp. The receiver is located in the cabin on the second shelf at fuselage station 200.

7–4. INDICATOR LAMP. (See figure 7–3.) The indicator lamp provides a means of visually determining when the aircraft is passing over a marker beacon transmitter. The lamp is located on the left-hand side of pilot's instrument panel.

7–5. ANTENNA AS-215/ARN. (See figure 7–3.) The antenna is flush type and is mounted on the lower surface of the right-hand wing.

7–6. OPERATIONAL CHECKOUT.

TEST EQUIPMENT REQUIRED

Figure and Index NO.	Name	Type Designation	Alternate	Use and Application
(None)	TEST OSCILLATOR	BC-376-11	None	Operational checkout of marker beacon receiver.
	TEST INDICATOR	BE-67	None	

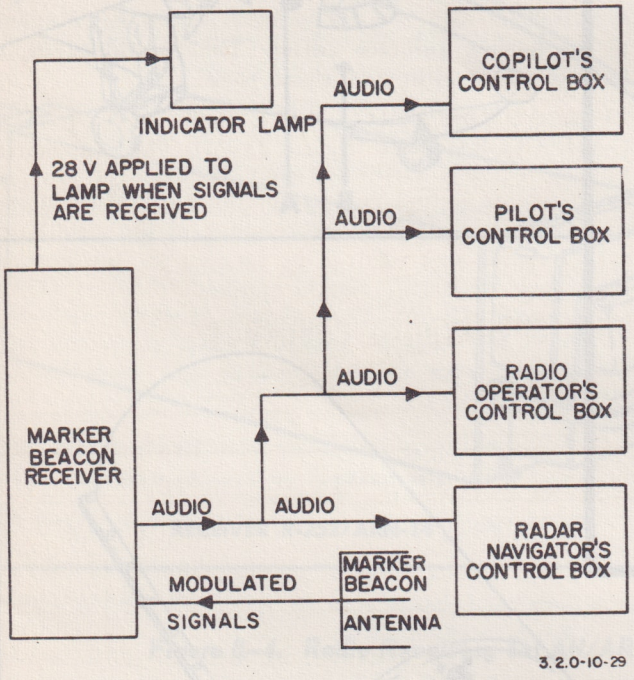

Figure 7–2. Marker Beacon Receiving Set RC-193A Complete Functional Data Flow

7–7. OPERATIONAL CHECKOUT OF RC-193A.

a. Make sure aircraft is electrically grounded to an unpainted surface on either main landing gear or nose gear.

b. Connect electrical power source.

c. Place toggle switch on test indicator panel at ADJUST RELAY.

d. Insert plug PL-55 of test indicator BE-67 into relay jack.

e. Rotate adjustable control on test indicator panel fully counterclockwise. Slowly rotate control clockwise until marker beacon lamp illuminates.

RESULT: The lamp will illuminate when a current of 0.75 to 1.00 milliampere is indicated on the test indicator.

f. Rotate control counterclockwise until lamp goes out.

RESULT: Value of current when lamp goes out should be approximately 0.5 milliamperes.

g. Disconnect test indicator from relay jack.

h. Place test oscillator 10 to 20 feet from marker beacon antenna.

i. Extend test oscillator antenna to full length and parallel to marker beacon antenna.

j. Turn test oscillator on.

k. Place modulation switch at 1300 cycles per second.

RESULT: Marker beacon lamp should illuminate and a steady tone should be heard in headset.

l. Disconnect test indicator from receiver.

m. Disconnect electrical power source.

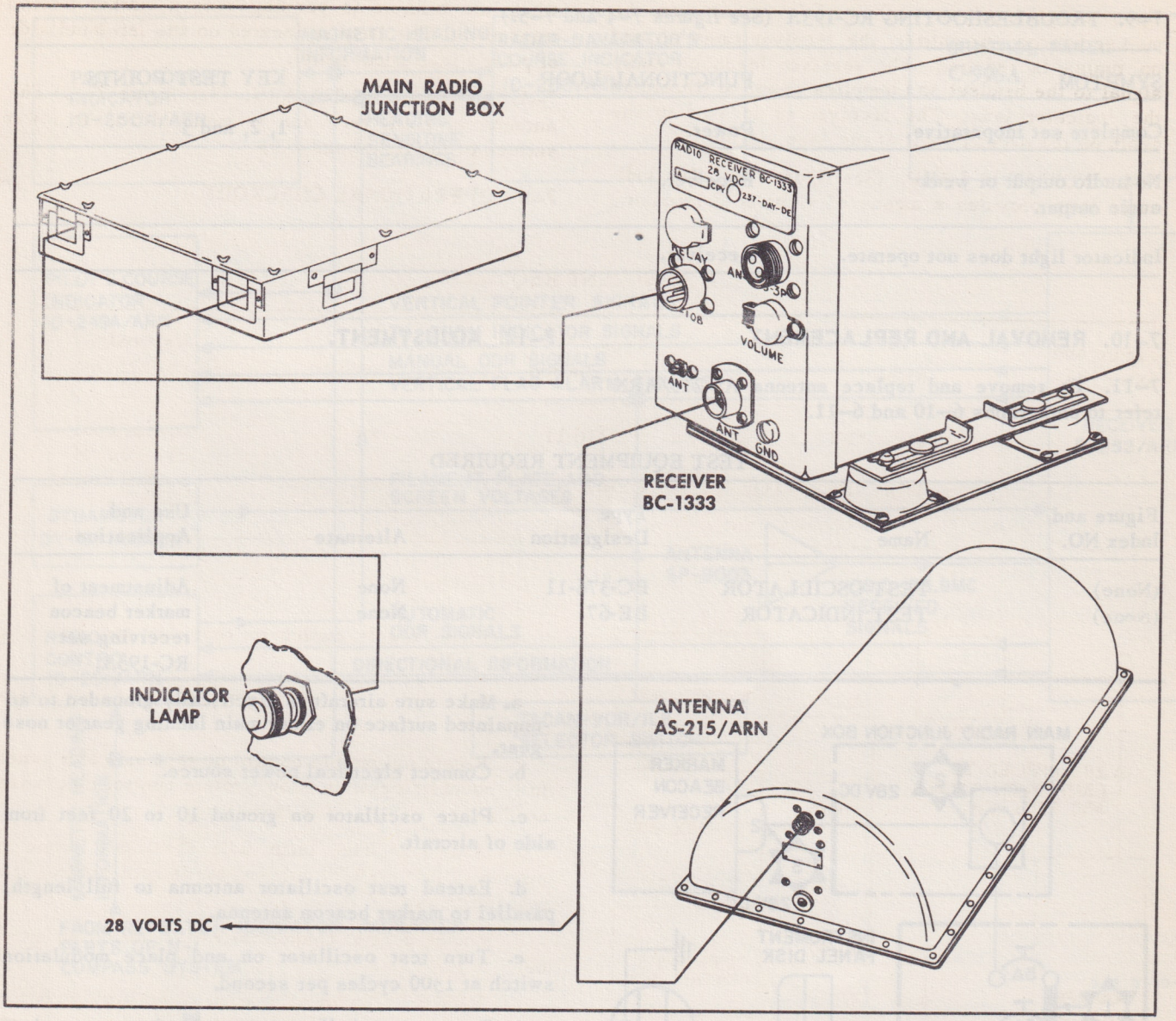

Figure 7–3. Marker Beacon Receiving Set RC-193A Cabling Diagram

7–8. SYSTEM ANALYSIS.

TEST EQUIPMENT REQUIRED

Figure and Index NO.	Name	Type Designation	Alternate	Use and Application
(None)	MULTIMETER	AN/PSM-6	Multimeter, Federal Stock NO. 6625-649-4593	Troubleshooting marker beacon receiving set RC-193A.

7-9. TROUBLESHOOTING RC-193A (See figures 7-4 and 7-5.)

SYMPTOM	FUNCTIONAL LOOP	KEY TEST POINTS
Complete set inoperative.	Power.	1, 2, and 3
No audio output or weak audio output.	Receiver.	
Indicator light does not operate.	Receiver.	

7-10. REMOVAL AND REPLACEMENT.

7-11. To remove and replace antenna AS-215/ARN refer to paragraphs 6-10 and 6-11.

7-12. ADJUSTMENT.

TEST EQUIPMENT REQUIRED

Figure and Index NO.	Name	Type Designation	Alternate	Use and Application
(None)	TEST OSCILLATOR	BC-376-11	None	Adjustment of marker beacon receiving set RC-193A.
(None)	TEST INDICATOR	BE-67	None	

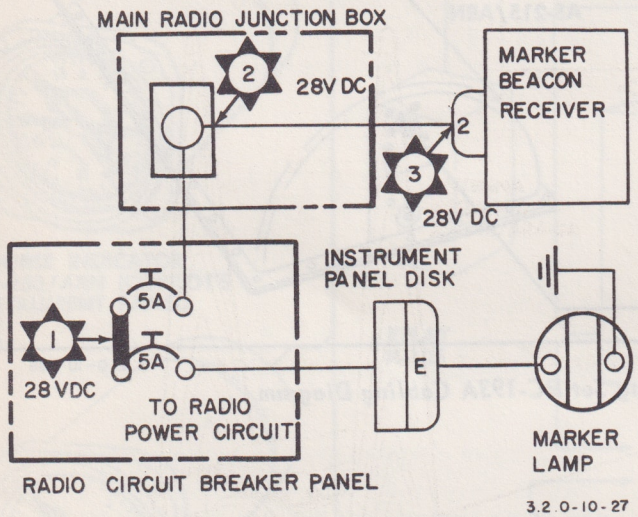

Figure 7-4. Marker Beacon Receiving Set RC-193A Power Distribution, Connection To Aircraft

7-13. ADJUSTMENT OF RC-193A.

Note

Make sure there is no moving object in the vicinity of the test oscillator or marker beacon antenna during tuning operations, as this will cause output meter fluctuations.

a. Make sure aircraft is electrically grounded to an unpainted surface on either main landing gear or nose gear.

b. Connect electrical power source.

c. Place oscillator on ground 10 to 20 feet from side of aircraft.

d. Extend test oscillator antenna to full length, parallel to marker beacon antenna.

e. Turn test oscillator on and place modulation switch at 1500 cycles per second.

f. Connect test indicator to marker beacon receiver by placing plug PL-55 into relay jack.

g. Adjust tuning capacitor labeled ANT for a maximum reading on test indicator. Should test meter go off scale, reduce signal strength of test oscillator by collapsing antenna sections. Check that receiver is tuned for maximum output by carefully repeating tuning procedure.

h. Observe reading of test indicator.

RESULT: Reading should be approximately 1.0 milliampere when a signal of approximately 1500 microvolts is being received.

i. Disconnect test indicator from receiver.

j. Disconnect electrical power source.

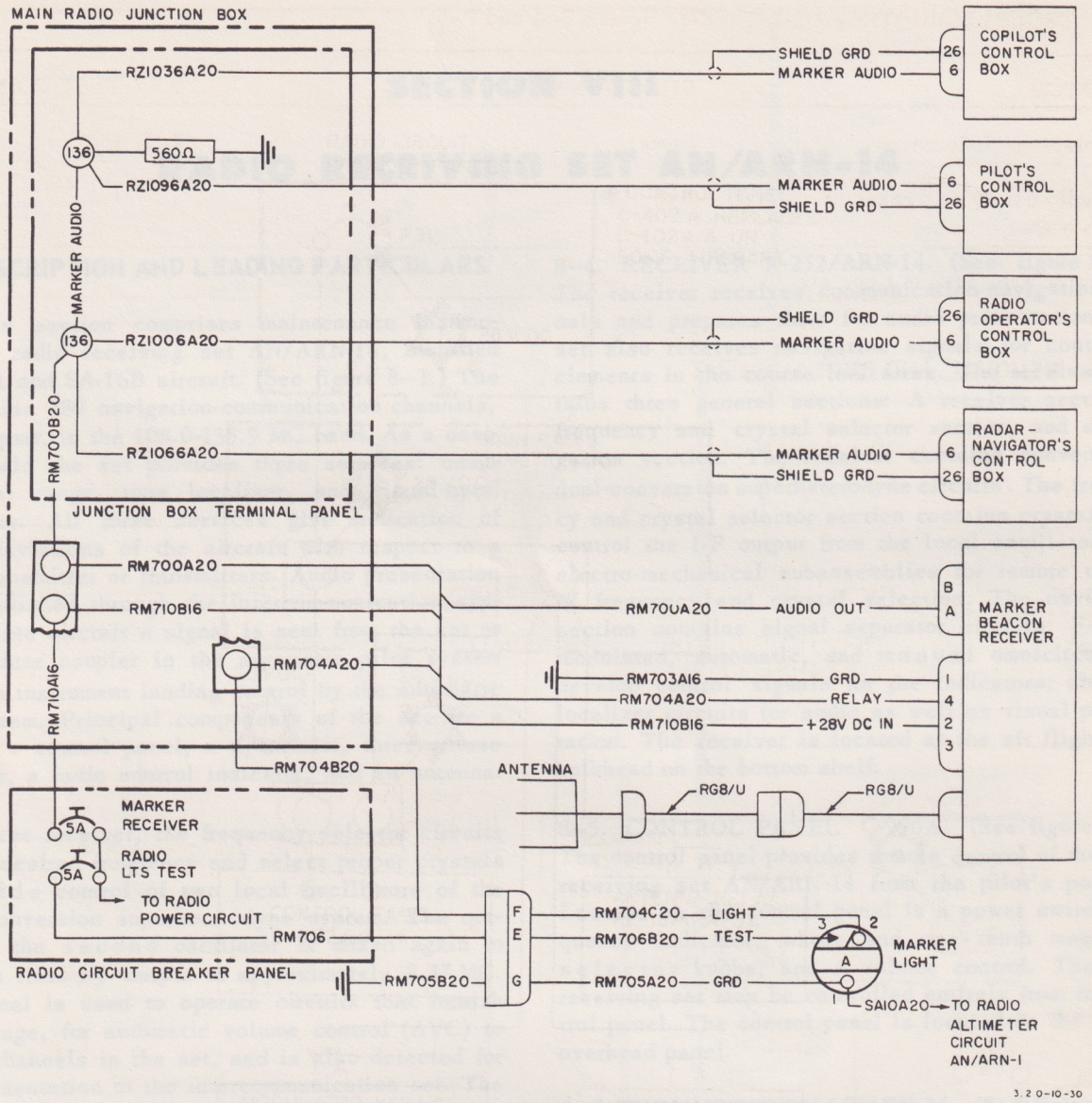

Figure 7–5. Marker Beacon Receiving Set RC-193A System Intercabling

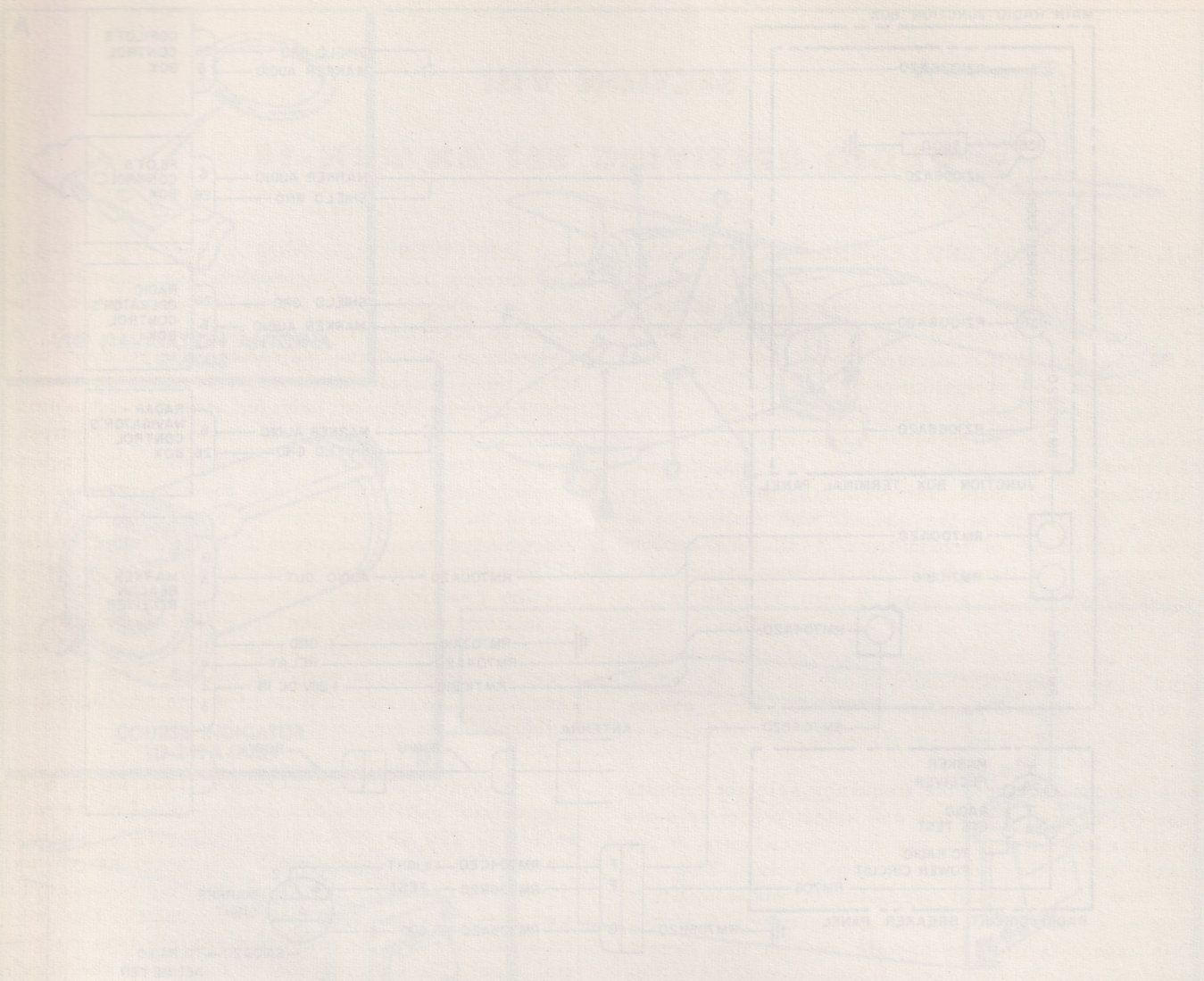

SECTION VIII

RADIO RECEIVING SET AN/ARN-14

8-1. DESCRIPTION AND LEADING PARTICULARS.

8-2. This section comprises maintenance instructions for radio receiving set AN/ARN-14, installed in SA-16A and SA-16B aircraft. (See figure 8-1.) The set contains 280 navigation-communication channels, 100 KC apart, in the 108.0-135.9 MC band. As a navigational aid the set provides three services: omnidirectional range, tone localizer, and visual-aural indications. All three services give indication of bearing deviations of the aircraft with respect to a ground transmitter or transmitters. Audio presentation is accomplished through the intercommunication system. On late aircraft a signal is sent from the set to the localizer coupler in the automatic pilot system for use in instrument landing control by the automatic pilot system. Principal components of the set are a receiver, a control panel, a dynamotor, three course indicators, a radio control indicator, and an antenna.

8-3. In the receiver, the frequency selector circuits tune the desired frequency and select proper crystals to provide control of two local oscillators of the double conversion superheterodyne system. The output from the second oscillator is mixed again to provide a final I-F output of approximately 8.37 MC. This signal is used to operate circuits that furnish bias voltage, for automatic volume control (AVC) to several channels in the set, and is also detected for audio presentation to the intercommunication set. The combined navigation signals are separated and operate circuits characteristic of their intended function. On omnidirectional range operation, a navigation signal received by the VHF navigation antenna is phase-compared with a reference signal. The phase difference, and sense, is used to influence the movement of the vertical pointer in the course indicator. On tone localizer operation, two different signals transmitted from either side of an imaginary vertical plane extending parallel to the runway, are received and compared for strength. The difference in strength, and sense, of the signals influences the position of the vertical pointer on the course indicator in the same manner. Aural indications come from two, interrupted, continuous wave, 1020 CPS signals transmitted from opposite sides of the airway. Figure 8-2 illustrates complete system data flow.

8-4. RECEIVER R-252/ARN-14. (See figure 8-3.) The receiver receives communication-navigation signals and prepares them for audio presentation. The set also receives navigation signals for control of elements in the course indicators. The receiver contains three general sections: A receiver section, a frequency and crystal selector section, and a navigation section. The receiver contains conventional dual-conversion superheterodyne circuits. The frequency and crystal selector section contains crystals that control the I-F output from the local oscillators and electro-mechanical subassemblies for remote control of frequency and crystal selection. The navigation section contains signal separator circuits; F-M demodulated, automatic, and manual omnicircuits to develop control signals for the indicators; and tone localizer circuits for audio as well as visual presentation. The receiver is located at the aft flight deck bulkhead on the bottom shelf.

8-5. CONTROL PANEL C-996A. (See figure 8-3.) The control panel provides remote control of the radio receiving set AN/ARN-14 from the pilot's position. Located on the control panel is a power switch, frequency indicator, whole and one-tenth megacycle selector knobs, and a volume control. The radio receiving set may be controlled entirely from the control panel. The control panel is located on the pilot's overhead panel.

8-6. DYNAMOTOR DY-66/ARN-14. (See figure 8-3.) The dynamotor is designed to supply 245 volts DC to the receiver. The dynamotor contains an input and output filter circuit in addition to a power supply. Power required to operate the dynamotor is obtained from the aircraft's 28-volt DC system. The main power relay is energized by placing the power switch, located on control panel C-760/A, at ON TONE. When the relay is energized, filament and plate voltage is supplied to the receiver. The dynamotor is located at the aft flight deck bulkhead on bottom shelf.

8-7. COURSE INDICATOR ID-249A/ARN. (See figure 8-3.) A vertical pointer operated by receiver R-252/ARN-14 moves laterally to give lateral guidance, and a horizontal pointer operated by the glide slope equipment moves vertically to give vertical

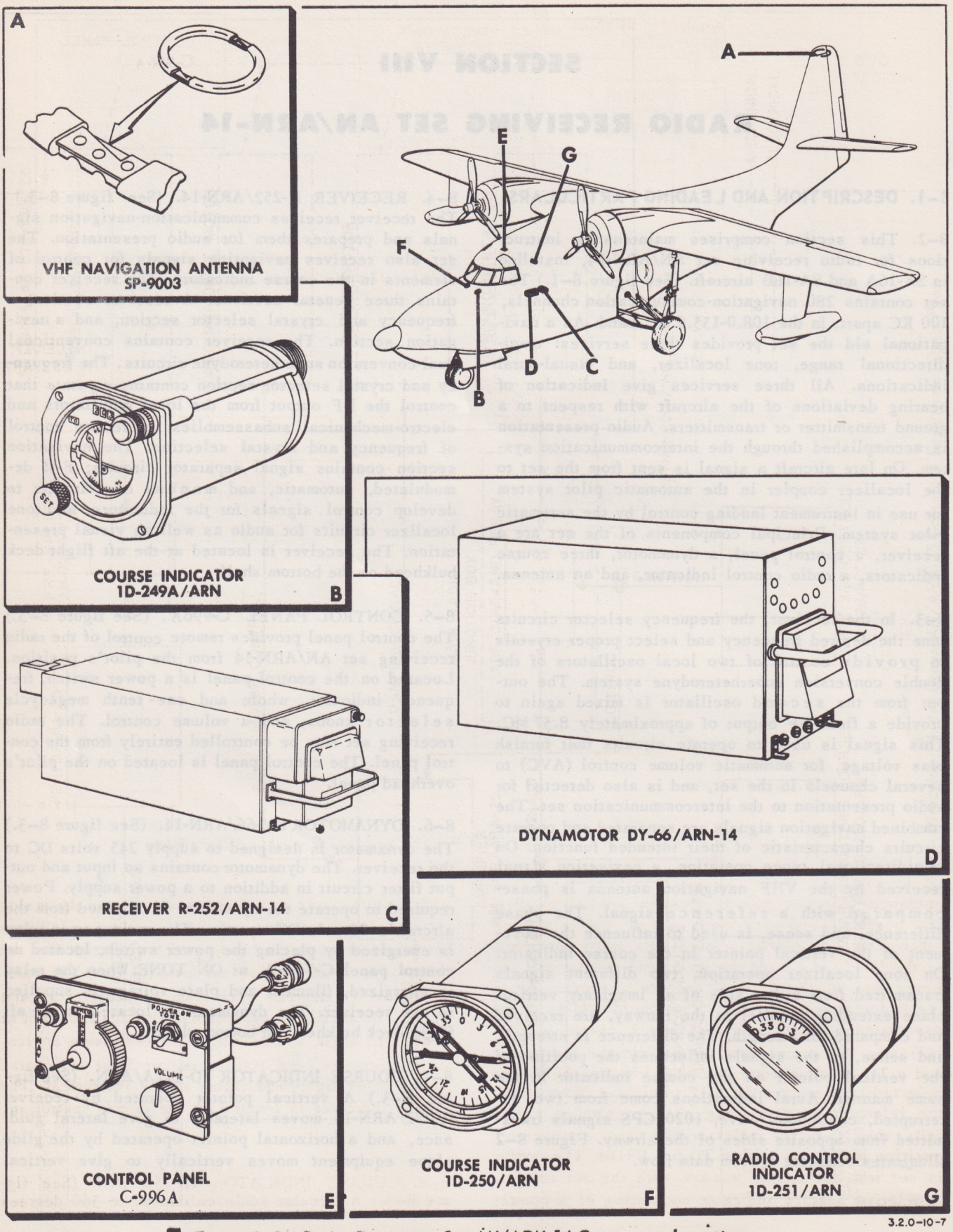

Figure 8–1. Radio Receiving Set AN/ARN-14 Component Locations

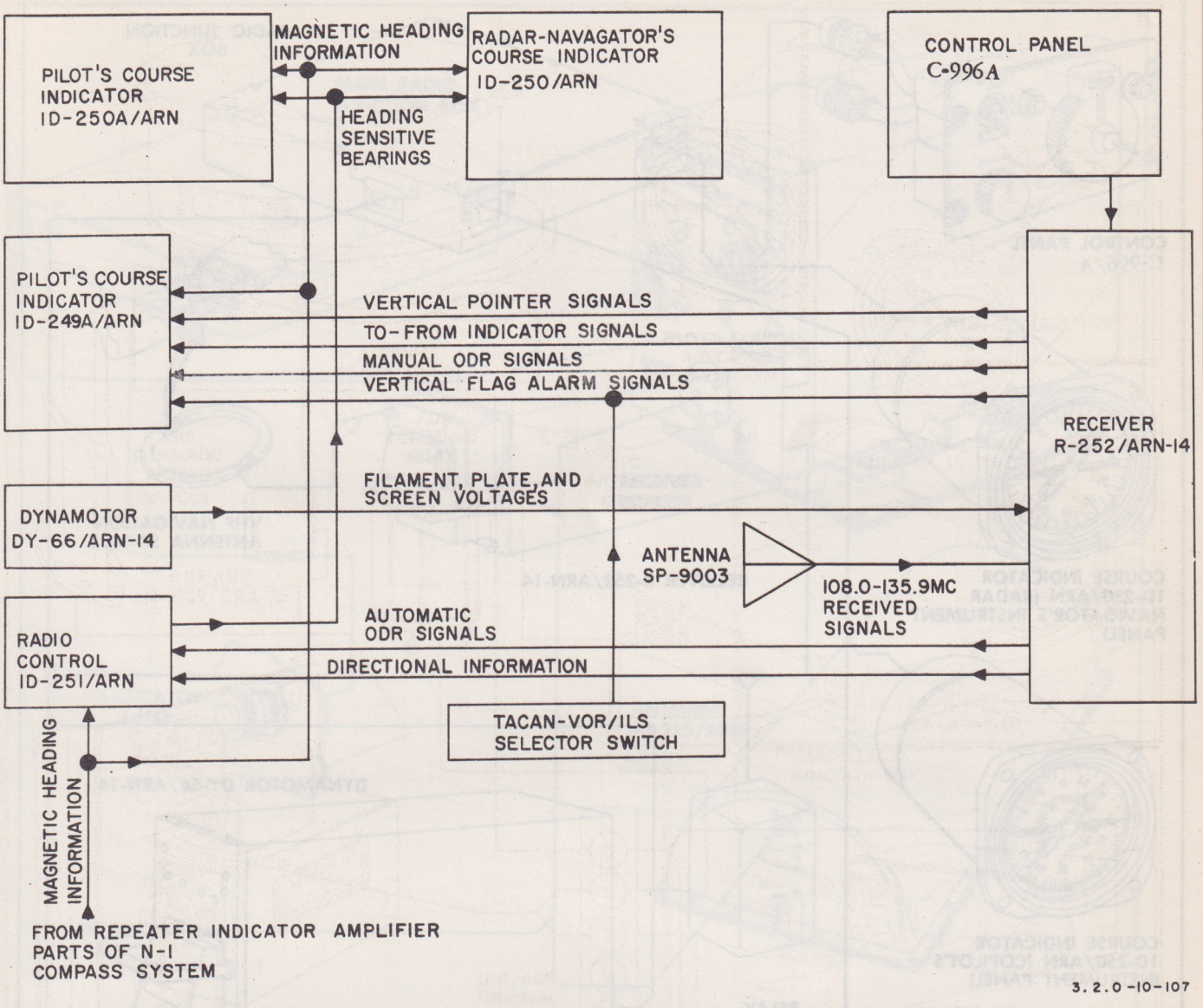

Figure 8–2. Radio Receiving Set AN/ARN-14 Complete Functional Data Flow

guidance. The two pointers remain parallel to their rest positions and are always at right angles to each other. Two flag alarms labeled OFF come into view at the left-hand end of the horizontal pointer and the lower end of the vertical pointer whenever signal levels decrease to the extent that the indication of the associated pointer is unreliable. A course window indicates the course that is set into the instrument and a TO-FROM window indicates whether the course selected is to or from the VHF omnirange. When either the reference or variable phase omnirange signal fails, the TO-FROM indicator will assume a centered position indicating neither TO nor FROM. The course is set into the course window with the set control. A relative heading indicator consisting of a pointer with a white circle on the end moves around the inside edge of the circular face of the instrument to indicate the angle between the heading of the aircraft and the course set in the course window. Its travel is calibrated to 45 degrees each side of center, top and bottom, to facilitate approaching the desired tract at a definite angle and reading wind correction angles. A press-to-test, dim control marker light is located in the upper right-hand corner of the instrument. The course indicator is located on the pilot's instrument panel.

8–8. COURSE INDICATOR ID-250/ARN. (See figure 8–3.) A circular scale calibrated to 360 degrees

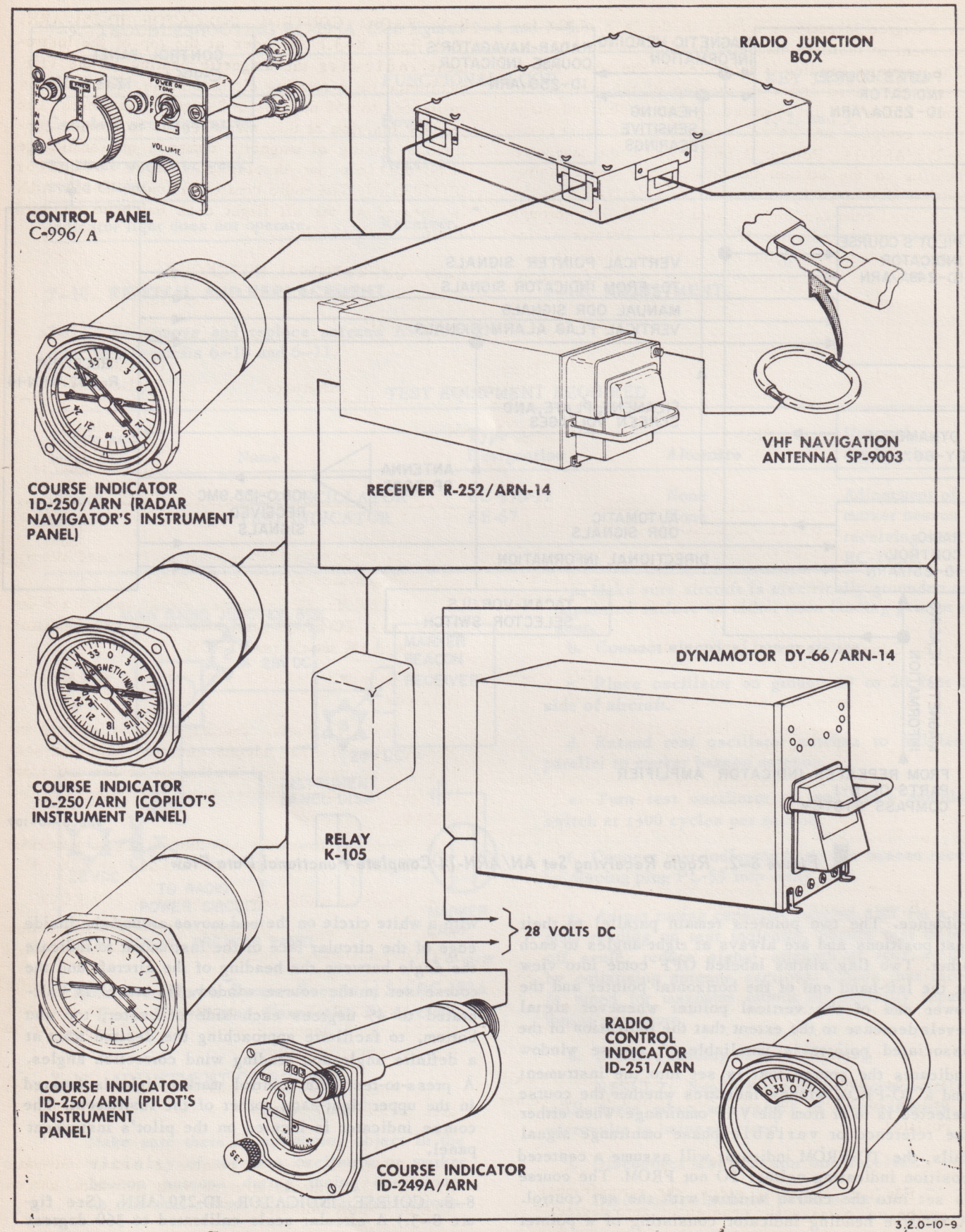

Figure 8–3. Radio Receiving Set AN/ARN-14 Cabling Diagram

in 2-degree increments rotates in the face of the instrument to indicate magnetic heading of the aircraft. The magnetic heading is indicated on the scale underneath the fixed index at the top of the instrument. This indication is operated by the stabilized magnetic compass and is independent of receiver R-252/ARN-14. Pointer 2 indicates the magnetic bearing to the station on the circular scale. Information displayed by this pointer is derived from the stabilized compass and modified by VOR data through radio control indicator ID-251/ARN. Pointer 1, located above pointer 2, but on a different shaft, is controlled by the radio compass and direction finder group.

8-9. RADIO CONTROL INDICATOR ID-251/ARN. (See figure 8-3.) An index at the top of the instrument indicates the magnetic bearing of the VHF omnirange on a rotating circular scale. The scale is calibrated to 360 degrees in 2-degree increments. The primary function of this instrument is to provide continuous mixing of magnetic compass and omnirange information for display on course indicator ID-250/ARN. The radio control indicator ID-251/ARN is located at the aft flight deck bulkhead on third shelf.

8-10. OPERATIONAL CHECKOUT.

TEST EQUIPMENT REQUIRED

Figure and Index NO.	Name	Type Designation	Alternate	Use and Application
(None)	SIGNAL GENERATOR	SG-13/ARN		To provide a cable transmitted signal to the receiver.

8-11. OPERATIONAL CHECKOUT OF AN/ARN-14. (See figure 8-4.)

a. Make sure aircraft is electrically grounded to an unpainted surface on either main landing gear or nose gear.

b. Connect electrical power source.

c. Connect signal generator SG-13/ARN power cord to convenient 28-volt D-C outlet in aircraft.

d. Disconnect antenna lead-in cable from front of receiver R-252/ARN-14.

e. Connect NAV output receptacle of signal generator to antenna lead-in receptacle on receiver.

f. Place VHF navigation switch on control panel C-760/A at ON TONE.

g. Position meter switch on signal generator to LINE, and rotate signal generator power switch until voltmeter reads 21 volts.

h. Position frequency selector on signal generator and frequency control on control panel to 114.0 MC.

i. Position meter switch on signal generator to CAR and adjust meter needle to red line with carrier set control.

j. Set audio selector switch to VOR and NAV-GS switch to NAV. Turn LOC-GS switch to top center position.

Note

For the following steps, the aircraft must be on a magnetic heading of zero degrees.

k. Set VOR BEARING switch to 180° and set the microvolts control to 1000 microvolts.

RESULT: All indicators should read 0 ± 3 degrees and TO-FROM indicator on course indicator ID-249A/ARN should read FROM.

l. Place ±1 DEGREE switch at + and then − positions.

RESULT: Radial reading of radio control inidcator ID-251/ARN should increase and decrease 1 ± 1/2 degree. Radial reading of course indicator ID-250/ARN should increase and decrease 1 ± 3/4 degree.

m. Position frequency selector on signal generator and frequency control on control panel to 110.1 MC.

n. Position audio selector switch to TONE LOC.

o. Rotate signal generator LOC-GS switch from left-hand shaded area to right-hand shaded area marked for zero adjustment.

RESULT: Vertical pointer of course indicator ID-249A/ARN should line up with right-hand dot on face of course indicator.

p. Rotate LOC-GS switch from right-hand shaded area to left-hand shaded area marked for zero adjustment.

RESULT: Vertical pointer in course indicator ID-249A/ARN should line up with left-hand dot on face of course indicator.

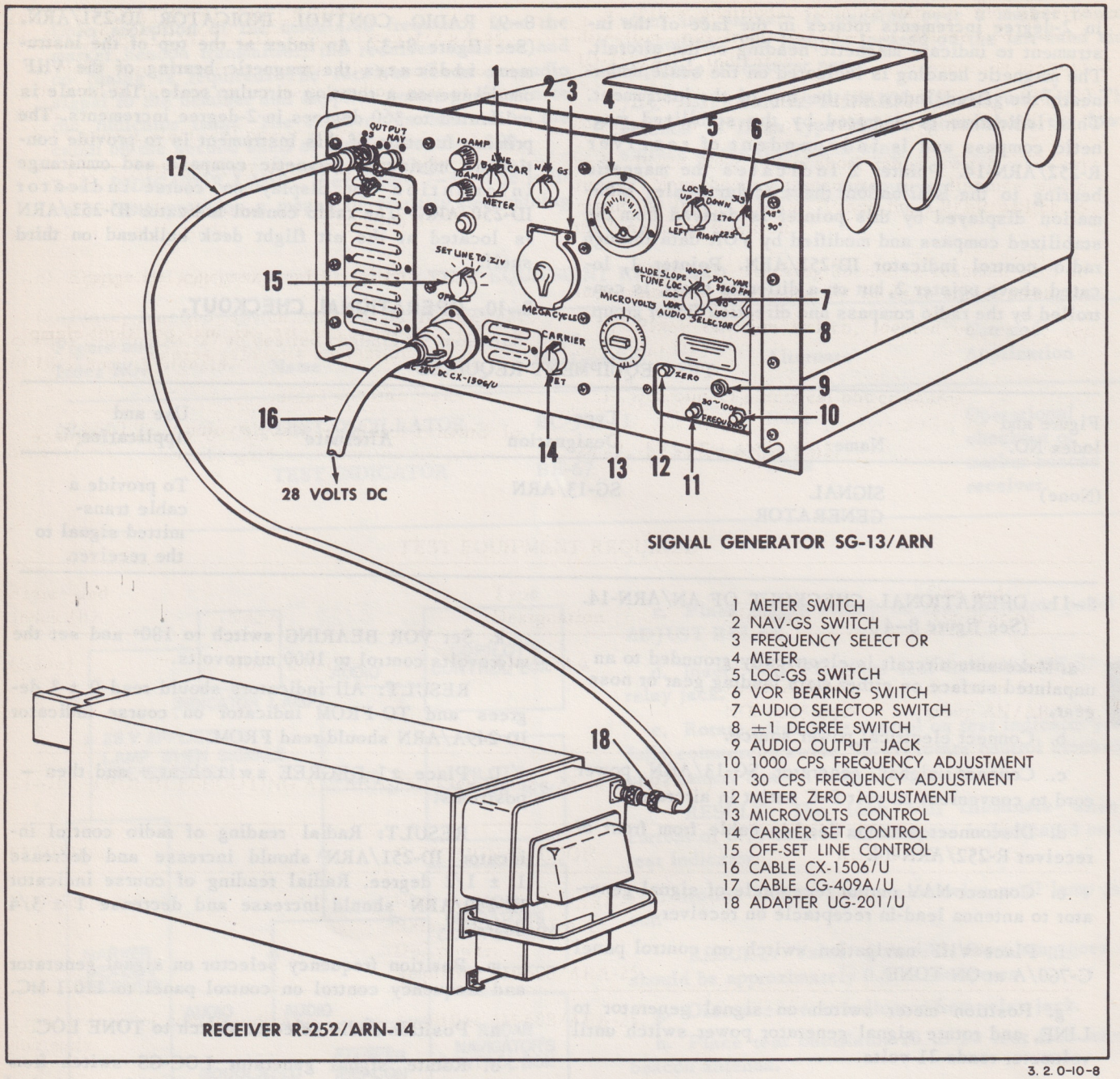

3.2.0-10-8

Figure 8–4. Radio Receiving Set AN/ARN-14 Connection to Signal Generator

q. Adjust LOC-GS switch so vertical pointer is exactly over left-hand dot on course indicator face, then vary output signal from 20 to 20,000 microvolts.

RESULT: Vertical pointer should move only a small amount.

to 1000 cycles; adjust volume control on control panel exactly over right-hand dot on face of course indicator, then vary output signal from 20 to 20,000 microvolts.

RESULT: Vertical pointer should move only a small amount.

s. Position signal generator audio selector switch to 1000 cycles; adjust volume control on control panel and listen for audio signal in headset.

RESULT: Continuous tone should be heard.

t. Disconnect signal generator output cable from receiver and connect antenna lead-in cable to receiver.

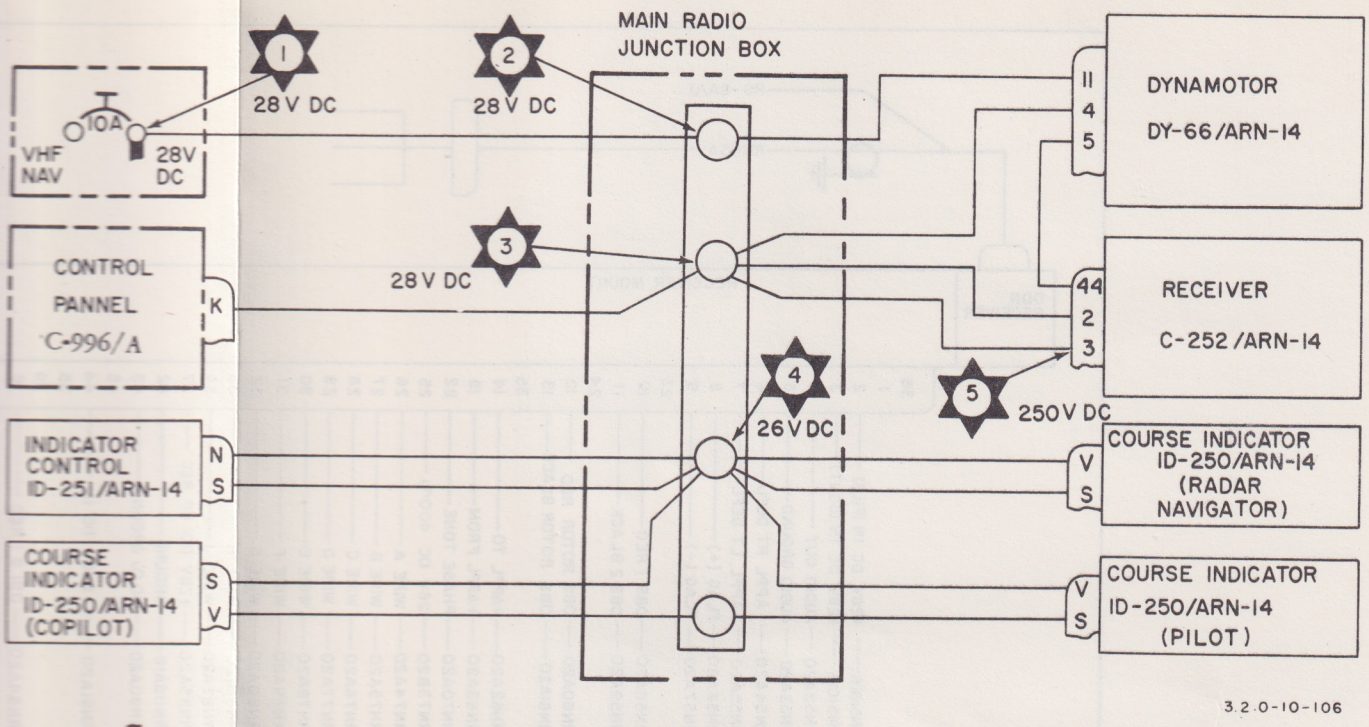

Figure 8–5. Radio Receiving Set AN/ARN-14 Power Distribution, Connection to Aircraft

u. Place signal generator in direct view of VHF navigation antenna.

RESULT: Indicators should indicate results of the functions selected on the signal generator.

v. Place signal generator power switch at OFF.

w. Place power switch on control panel C-7o0/A at OFF.

x. Disconnect electrical power.

8–12. SYSTEM ANALYSIS.

TEST EQUIPMENT REQUIRED

Figure and Index NO.	Name	Type Designation	Alternate	Use and Application
(None)	MULTIMETER	AN/PSM-6	Multimeter, Federal Stock NO. 6625-649-4593.	Troubleshooting radio receiving set AN/ARN-14.

8–13. TROUBLESHOOTING AN/ARN-14. (See figures 8–5 and 8–6.)

SYMPTOM	FUNCTIONAL LOOP	KEY TEST POINTS
No audio signal.	Receiver.	
All indicators indicate improperly.	Receiver. Antenna. Dynamotor.	1, 2, and 3
No operation on tone localizer or VAR.	Receiver.	

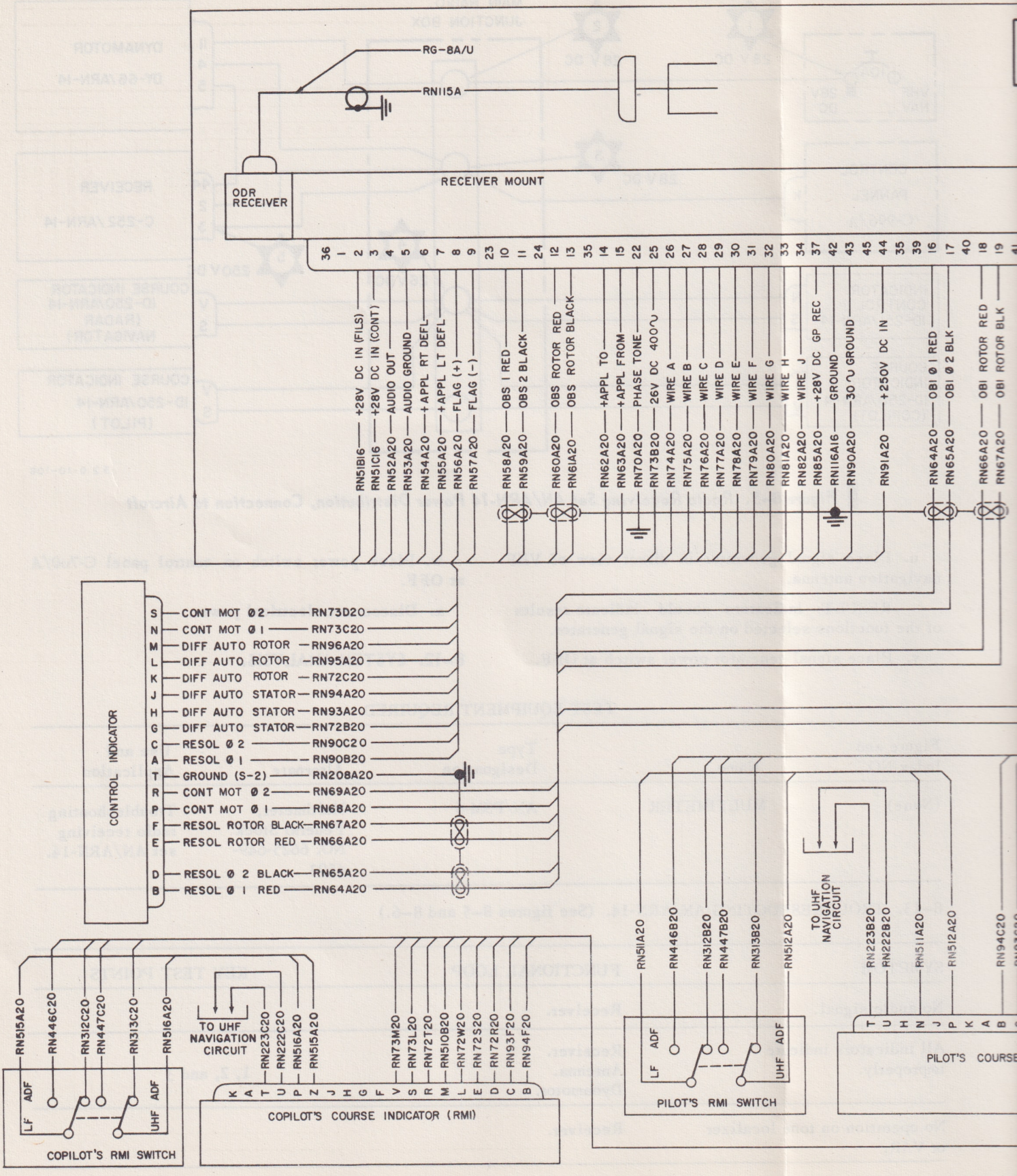
RG-8A/U
RN115A
ODR RECEIVER
RECEIVER MOUNT
RN51B16 +28V DC IN (FILS)
RN51C16 +28V DC IN (CONT)
RN52A20 AUDIO OUT
RN53A20 AUDIO GROUND
RN54A20 +APPL RT DEFL
RN55A20 +APPL LT DEFL
RN56A20 FLAG (+)
RN57A20 FLAG (-)
RN58A20 OBS 1 RED
RN59A20 OBS 2 BLACK
RN60A20 OBS ROTOR RED
RN61A20 OBS ROTOR BLACK
RN62A20 +APPL TO
RN63A20 +APPL FROM
RN70A20 PHASE TONE
RN73B20 26V DC 400~
RN74A20 WIRE A
RN75A20 WIRE B
RN76A20 WIRE C
RN77A20 WIRE D
RN78A20 WIRE E
RN79A20 WIRE F
RN80A20 WIRE G
RN81A20 WIRE H
RN82A20 WIRE J
RN85A20 +28V DC GP REC
RN116A16 GROUND
RN90A20 30~V GROUND
RN91A20 +250V DC IN
RN64A20 OBI Ø 1 RED
RN65A20 OBI Ø 2 BLK
RN66A20 OBI ROTOR RED
RN67A20 OBI ROTOR BLK
CONTROL INDICATOR
S CONT MOT Ø 2 RN73D20
N CONT MOT Ø 1 RN73C20
M DIFF AUTO ROTOR RN96A20
L DIFF AUTO ROTOR RN95A20
K DIFF AUTO ROTOR RN72C20
J DIFF AUTO STATOR RN94A20
H DIFF AUTO STATOR RN93A20
G DIFF AUTO STATOR RN72B20
C RESOL Ø 2 RN90C20
A RESOL Ø 1 RN90B20
T GROUND (S-2) RN208A20
R CONT MOT Ø 2 RN69A20
P CONT MOT Ø 1 RN68A20
F RESOL ROTOR BLACK RN67A20
E RESOL ROTOR RED RN66A20
D RESOL Ø 2 BLACK RN65A20
B RESOL Ø 1 RED RN64A20
RN511A20
RN446B20
RN312B20
RN447B20
RN313B20
RN512A20
TO UHF NAVIGATION CIRCUIT
RN223B20
RN222B20
RN511A20
RN512A20
RN94C20
LF ADF
UHF ADF
PILOT'S RMI SWITCH
PILOT'S COURSE
RN515A20
RN446C20
RN312C20
RN447C20
RN313C20
RN516A20
TO UHF NAVIGATION CIRCUIT
RN223C20
RN222C20
RN516A20
RN515A20
RN73M20
RN73L20
RN72T20
RN510B20
RN72W20
RN72S20
RN72R20
RN93F20
RN94F20
COPILOT'S COURSE INDICATOR (RMI)
COPILOT'S RMI SWITCH

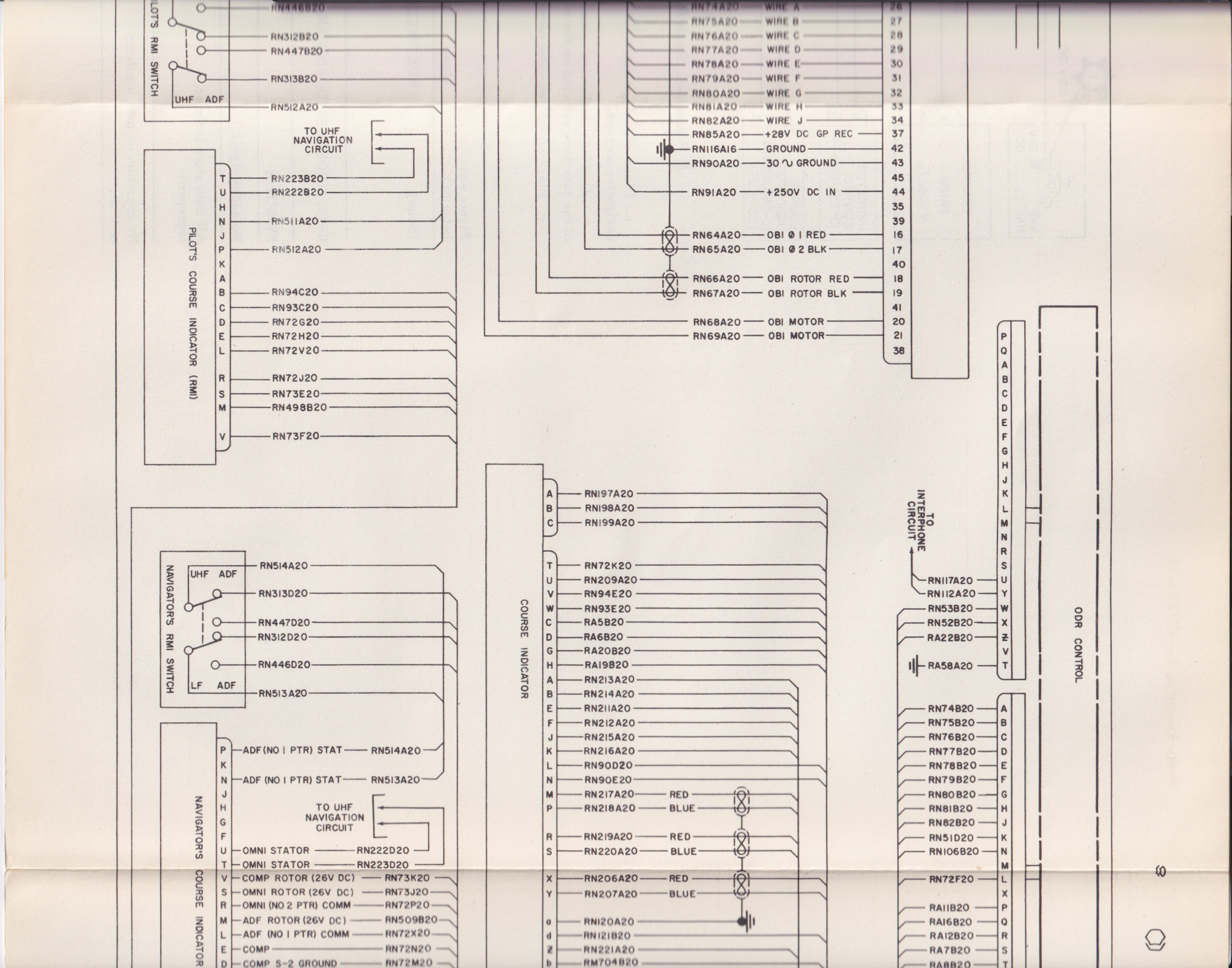
PILOT'S RMI SWITCH
UHF ADF
RN446B20
RN312B20
RN447B20
RN313B20
RN512A20
TO UHF NAVIGATION CIRCUIT
PILOT'S COURSE INDICATOR (RMI)
T RN223B20
U RN222B20
H
N RN511A20
J
P RN512A20
K
A
B RN94C20
C RN93C20
D RN72G20
E RN72H20
L RN72V20
R RN72J20
S RN73E20
M RN498B20
V RN73F20
RN74A20 WIRE A 26
RN75A20 WIRE B 27
RN76A20 WIRE C 28
RN77A20 WIRE D 29
RN78A20 WIRE E 30
RN79A20 WIRE F 31
RN80A20 WIRE G 32
RN81A20 WIRE H 33
RN82A20 WIRE J 34
RN85A20 +28V DC GP REC 37
RN116A16 GROUND 42
RN90A20 30 Ω GROUND 43
45
RN91A20 +250V DC IN 44
35
39
RN64A20 OBI Ø 1 RED 16
RN65A20 OBI Ø 2 BLK 17
40
RN66A20 OBI ROTOR RED 18
RN67A20 OBI ROTOR BLK 19
41
RN68A20 OBI MOTOR 20
RN69A20 OBI MOTOR 21
38
NAVIGATOR'S RMI SWITCH
UHF ADF
RN514A20
RN313D20
RN447D20
RN312D20
RN446D20
LF ADF
RN513A20
NAVIGATOR'S COURSE INDICATOR
P ADF (NO 1 PTR) STAT RN514A20
K
N ADF (NO 1 PTR) STAT RN513A20
J
H
G
TO UHF NAVIGATION CIRCUIT
F
U OMNI STATOR RN222D20
T OMNI STATOR RN223D20
V COMP ROTOR (26V DC) RN73K20
S OMNI ROTOR (26V DC) RN73J20
R OMNI (NO 2 PTR) COMM RN72P20
M ADF ROTOR (26V DC) RN509B20
L ADF (NO 1 PTR) COMM RN72X20
E COMP RN72N20
D COMP S-2 GROUND RN72M20
COURSE INDICATOR
A RN197A20
B RN198A20
C RN199A20
T RN72K20
U RN209A20
V RN94E20
W RN93E20
C RA5B20
D RA6B20
G RA20B20
H RA19B20
A RN213A20
B RN214A20
E RN211A20
F RN212A20
J RN215A20
K RN216A20
L RN90D20
N RN90E20
M RN217A20 RED
P RN218A20 BLUE
R RN219A20 RED
S RN220A20 BLUE
X RN206A20 RED
Y RN207A20 BLUE
a RN120A20
d RN121B20
Z RN221A20
b RM704B20
TO INTERPHONE CIRCUIT
RN117A20
RN112A20
RN53B20
RN52B20
RA22B20
RA58A20
ODR CONTROL
P
Q RN74B20
A RN75B20
B RN76B20
C RN77B20
D RN78B20
E RN79B20
F RN80B20
G RN81B20
H RN82B20
J RN51D20
K RN106B20
N
M
L RN72F20
X
P RA11B20
Q RA16B20
R RA12B20
S RA7B20
T RA8B20

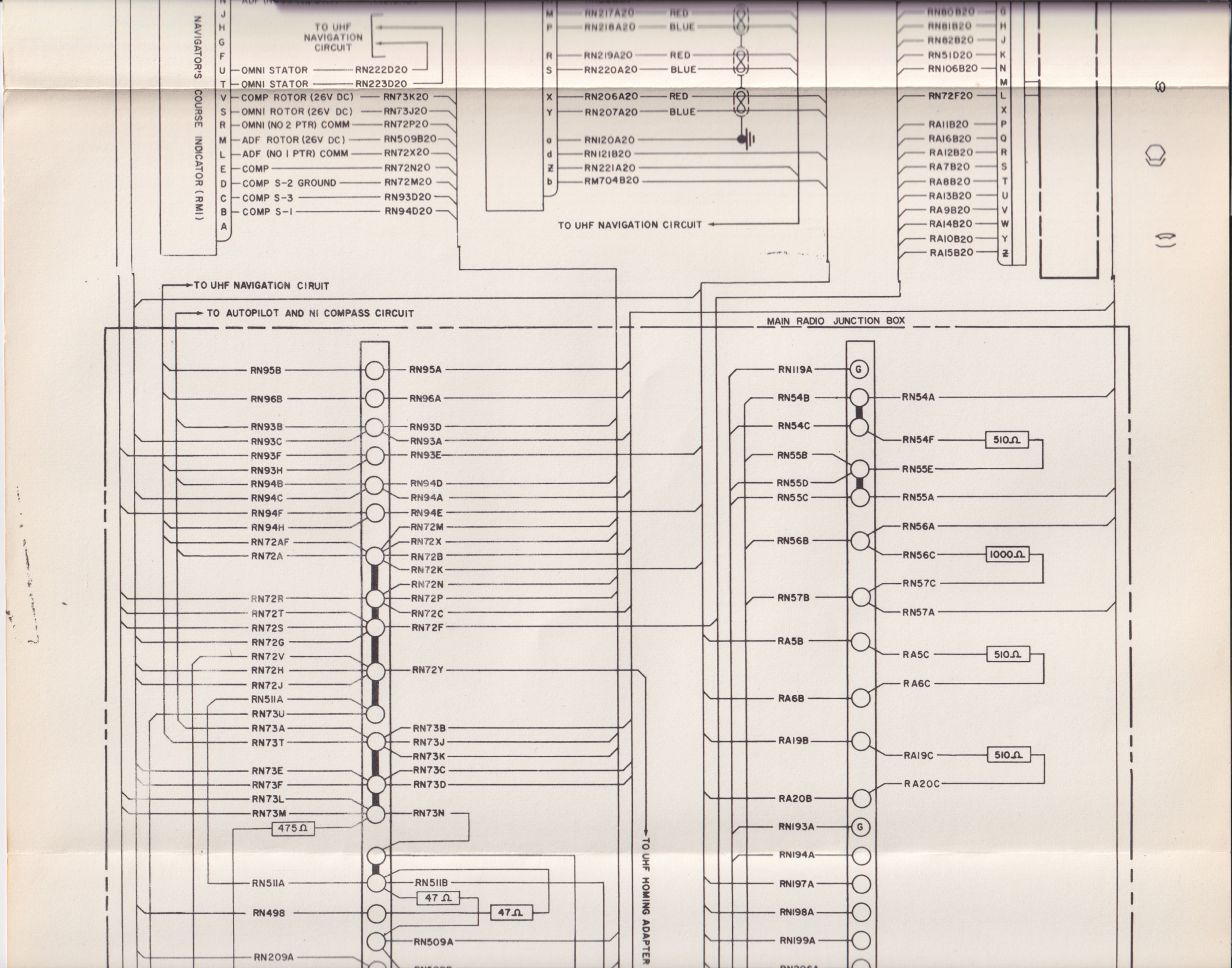
NAVIGATOR'S COURSE INDICATOR (RMI)
TO UHF NAVIGATION CIRCUIT
OMNI STATOR RN222D20
OMNI STATOR RN223D20
COMP ROTOR (26V DC) RN73K20
OMNI ROTOR (26V DC) RN73J20
OMNI (NO 2 PTR) COMM RN72P20
ADF ROTOR (26V DC) RN509B20
ADF (NO 1 PTR) COMM RN72X20
COMP RN72N20
COMP S-2 GROUND RN72M20
COMP S-3 RN93D20
COMP S-1 RN94D20
RN217A20 RED
RN216A20 BLUE
RN219A20 RED
RN220A20 BLUE
RN206A20 RED
RN207A20 BLUE
RNI20A20
RNI21B20
RN221A20
RM704B20
TO UHF NAVIGATION CIRCUIT
RN80B20
RN81B20
RN82B20
RN51D20
RN106B20
RN72F20
RAIIB20
RAI6B20
RAI2B20
RA7B20
RA8B20
RAI3B20
RA9B20
RAI4B20
RAI0B20
RAI5B20
TO UHF NAVIGATION CIRUIT
TO AUTOPILOT AND NI COMPASS CIRCUIT
MAIN RADIO JUNCTION BOX
RN95B
RN95A
RN96B
RN96A
RN93B
RN93C
RN93F
RN93H
RN94B
RN94C
RN94F
RN94H
RN72AF
RN72A
RN72R
RN72T
RN72S
RN72G
RN72V
RN72H
RN72J
RN51IA
RN73U
RN73A
RN73T
RN73E
RN73F
RN73L
RN73M
475Ω
RN93D
RN93A
RN93E
RN94D
RN94A
RN94E
RN72M
RN72X
RN72B
RN72K
RN72N
RN72P
RN72C
RN72F
RN72Y
RN73B
RN73J
RN73K
RN73C
RN73D
RN73N
RN51IA
RN51IB
47 Ω
RN498
47Ω
RN509A
RN209A
TO UHF HOMING ADAPTER
RNII9A
RN54B
RN54C
RN55B
RN55D
RN55C
RN56B
RN57B
RA5B
RA6B
RAI9B
RA20B
RNI93A
RNI94A
RNI97A
RNI98A
RNI99A
G
RN54A
RN54F
510Ω
RN55E
RN55A
RN56A
RN56C
1000Ω
RN57C
RN57A
RA5C
510Ω
RA6C
RAI9C
510Ω
RA20C

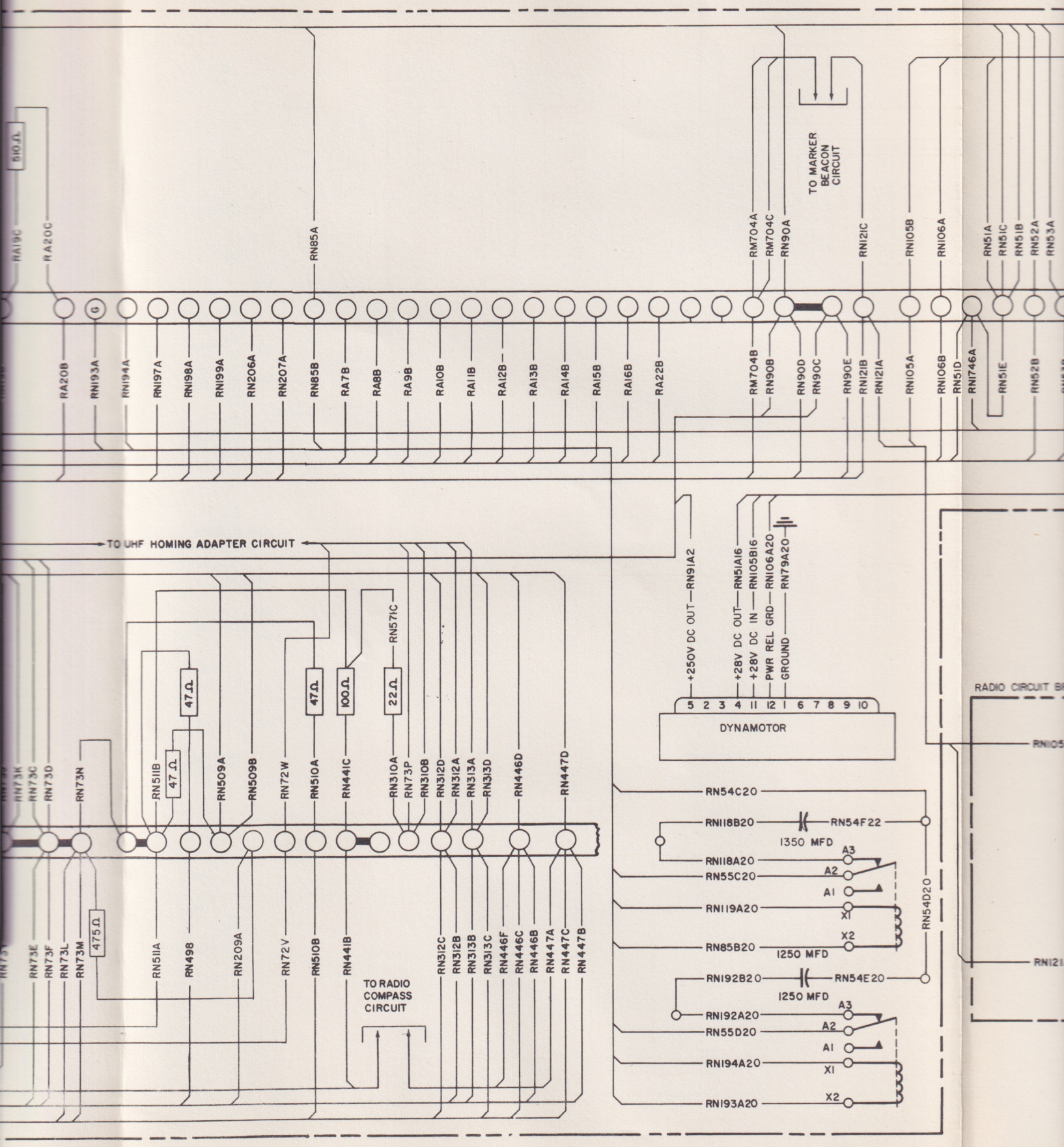

Figure 8–6. Radio R

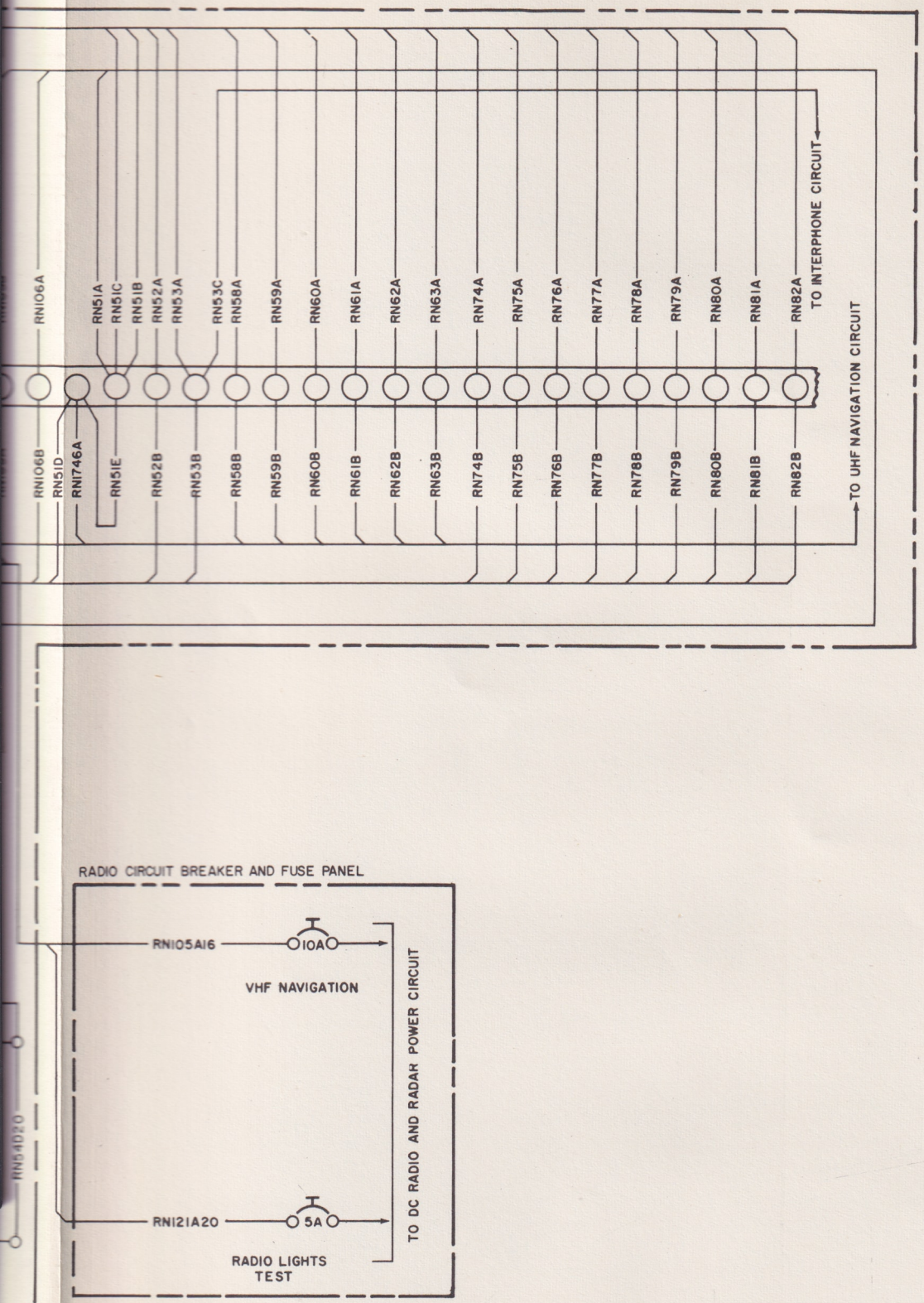

Figure 8–6. Radio Receiving Set AN/ARN-14 System Intercabling

SYMPTOM	FUNCTIONAL LOOP	KEY TEST POINTS
Equipment malfunctioning when connected to antenna. Normal with direct cable connection to signal generator.	Antenna .	

8-14. REMOVAL AND REPLACEMENT.

8-15. REMOVAL OF ANTENNA SP-9003.

a. Remove fin cap by removing attaching screws and disconnecting cable to AN/APX-6 antenna. This will expose antenna.

b. To remove antenna, disconnect cable, first observing and recording exactly how matching cables are routed and clamped to fin; remove attaching screws.

c. Remove antenna.

8-16. REPLACEMENT OF ANTENNA SP-9003.

a. Place antenna in its original position; clamp cables to fin and replace attaching screws.

b. Connect antenna cable.

c. Connect cable to AN/APX-6 antenna; replace fin cap and secure with attaching screws.

SECTION IX

RADIO COMPASS AN/ARN-6

9-1. DESCRIPTION AND LEADING PARTICULARS.

9-2. This section comprises maintenance instructions for radio compass AN/ARN-6 installed in SA-16A and SA-16B aircraft. (See figure 9-1.) The radio compass is an airborne navigation and communication receiver which provides the following: automatic visual bearing information and audio reception from a transmitting station by using the loop and sense antennas, aural-null indications from a transmitting station by using the loop antenna, and audio reception from a transmitting station by using the loop or sense antenna. The visual bearing indications are given by pointer 1 of course indicator ID-250/ARN which is part of radio receiving set AN/ARN-14. The audio signals are fed to the intercommunication system. The radio compass has a frequency range of 100 to 1750 KC covered in four bands as follows:

Band one – 100 to 200 KC
Band two – 200 to 410 KC
Band three – 410 to 850 KC
Band four – 850 to 1750 KC

Principal components of the radio compass are a receiver, two control panels, and two antennas. Figure 9-2 illustrates complete system data flow.

9-3. RECEIVER R-101A/ARN-6. (See figure 9-3a.) The radio compass receiver contains the compass circuit, receiver circuit, automatic loop control circuit, vibrator power supply circuit, and the necessary circuits to provide accurate tuning and audio identification of unmodulated radio signals. The radio compass receiver is located on the fourth shelf at fuselage station 200.

9-4. CONTROL PANEL C-403/A. (See figure 9-3.) Two control panels, one located on the pilot's overhead panel and one located on the radar-navigator's panel, provide remote function selection and control of the radio compass receiver. Each panel contains a function selector switch, a band switch, a tuning crank, a loop L-R switch, and a CW-VOICE switch.

9-5. LOOP ANTENNA AS-313/ARN-6. (See figure 9-3.) The radio compass loop antenna is a directional antenna rotated by a drive motor through a gear train. A compensator which can be adjusted externally is provided to correct for radio compass deviation. An autosyn transmitter is geared to the loop and supplies loop position information to the course indicator ID-250/ARN. The entire loop is hermetically sealed and filled with nitrogen and cannot be opened without special tools. The loop antenna is located on top of the fuselage at station 200.

9-6. NONDIRECTIONAL SENSE ANTENNA (See figure 9-3.) The sense antenna supplies signals to the radio compass as an aid in avoiding loop antenna ambiguity of 180 degrees. The sense antenna is a wire-type antenna extending from top of the fin to a radio compass mast located on top of the fuselage at station 200.

9-7. OPERATIONAL CHECKOUT.

9-8. OPERATIONAL CHECKOUT OF AN/ARN-6.

a. Make sure aircraft is electrically grounded to an unpainted surface on either main landing gear or nose gear.

b. Connect electrical power source.

c. Place function switch on control panel at LOOP and allow approximately 15 minutes for equipment to warm up.

d. Place LOOP L-R switch at L and then R. Hold switch in each position until pointer 1 of course indicator completes one revolution in each direction.

RESULT: Pointer 1 should rotate smoothly and without jerking.

e. Press LOOP L-R switch inward and hold in R then L positions until pointer 1 of course indicator completes one revolution in each direction.

RESULT: Rotational speed of pointer 1 should increase.

f. Use headphones and tuning crank and tune in station of known geographical location.

g. Use LOOP L-R switch to position antenna until a minimum signal is received.

RESULT: With 0 degrees at top of azimuth dial, pointer 1 of course indicator ID-250/ARN should indi-

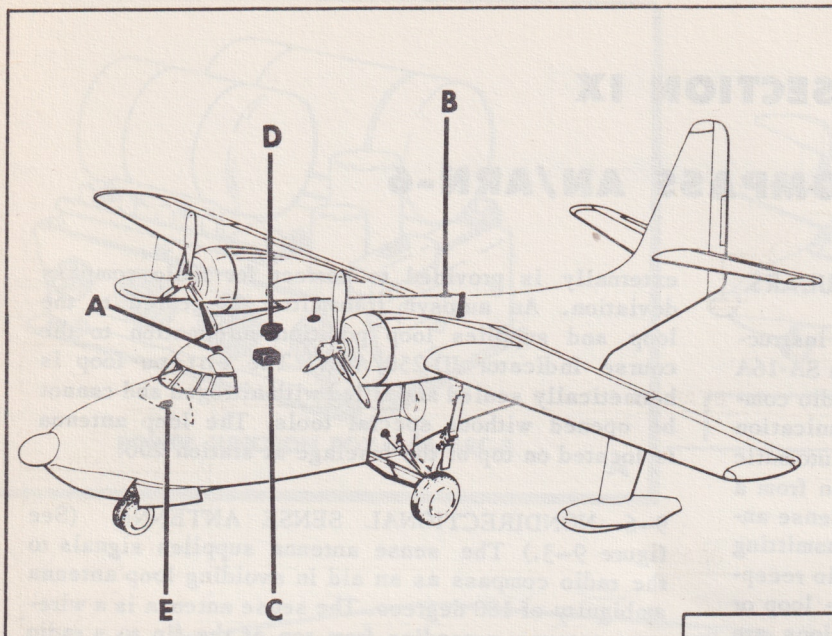

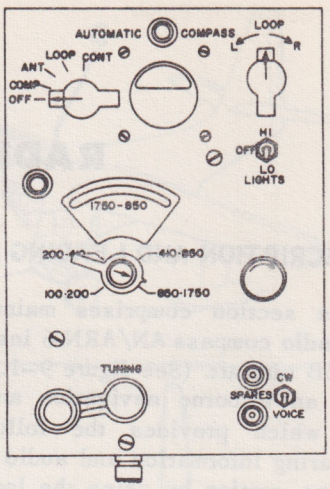

CONTROL PANEL C-403/A

A

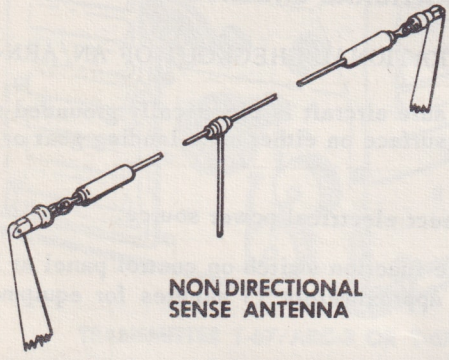

NON DIRECTIONAL SENSE ANTENNA

B

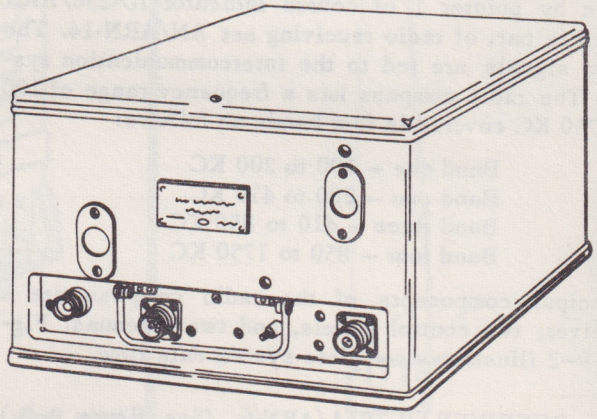

RECEIVER R-101A/ARN-6

C

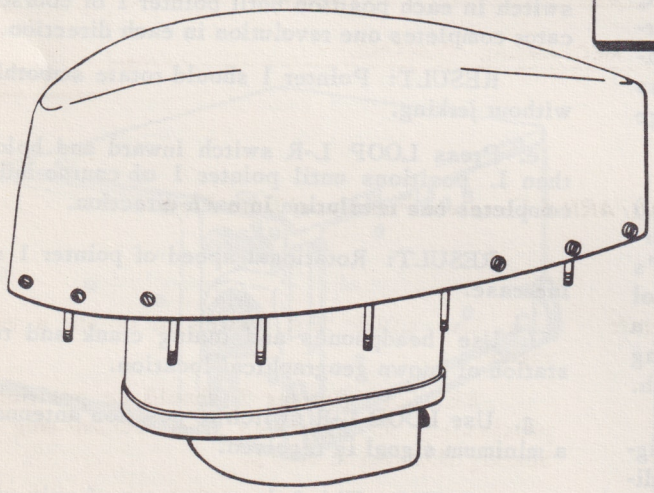

LOOP ANTENNA AS-313B/ARN-6

D

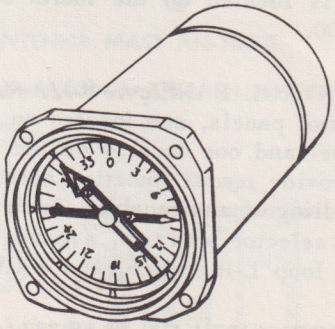

COURSE INDICATOR 1D-250/ARN

E

3.2.0-10-18

Figure 9-1. Radio Compass AN/ARN-6 Component Locations

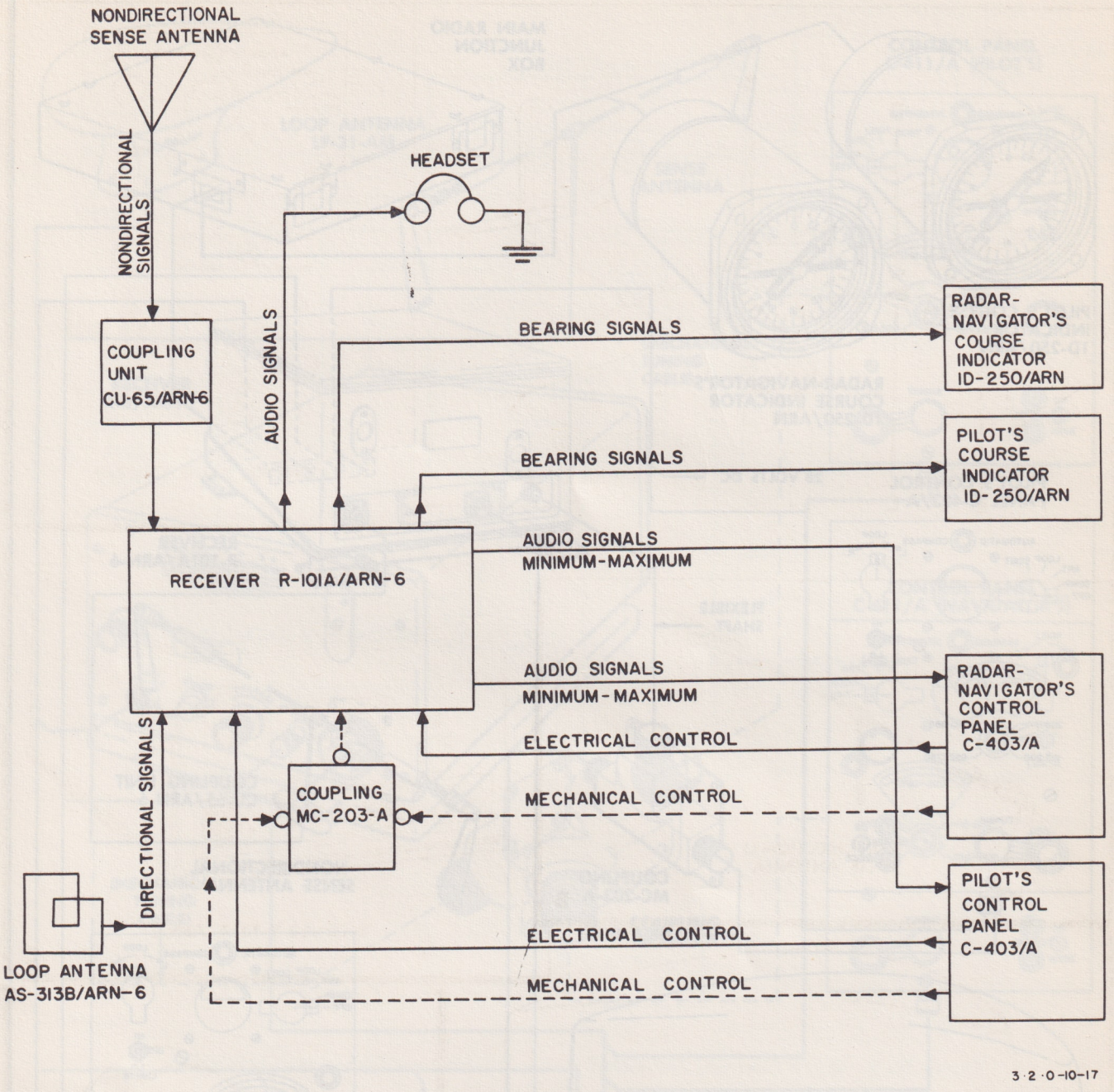

Figure 9–2. Radio Compass AN/ARN-6 Complete Functional Data Flow

cate bearing of transmitting station relative to aircraft heading.

Note

A second null can be obtained 180 degrees from station bearing. Determine the general location of the transmitting station to prevent using the wrong null.

h. Use LOOP L-R switch to obtain a maximum signal.

RESULT: Pointer 1 should be positioned approximately 90 degrees from transmitting station bearing obtained in step g.

i. Repeat steps d through h for the remaining three bands.

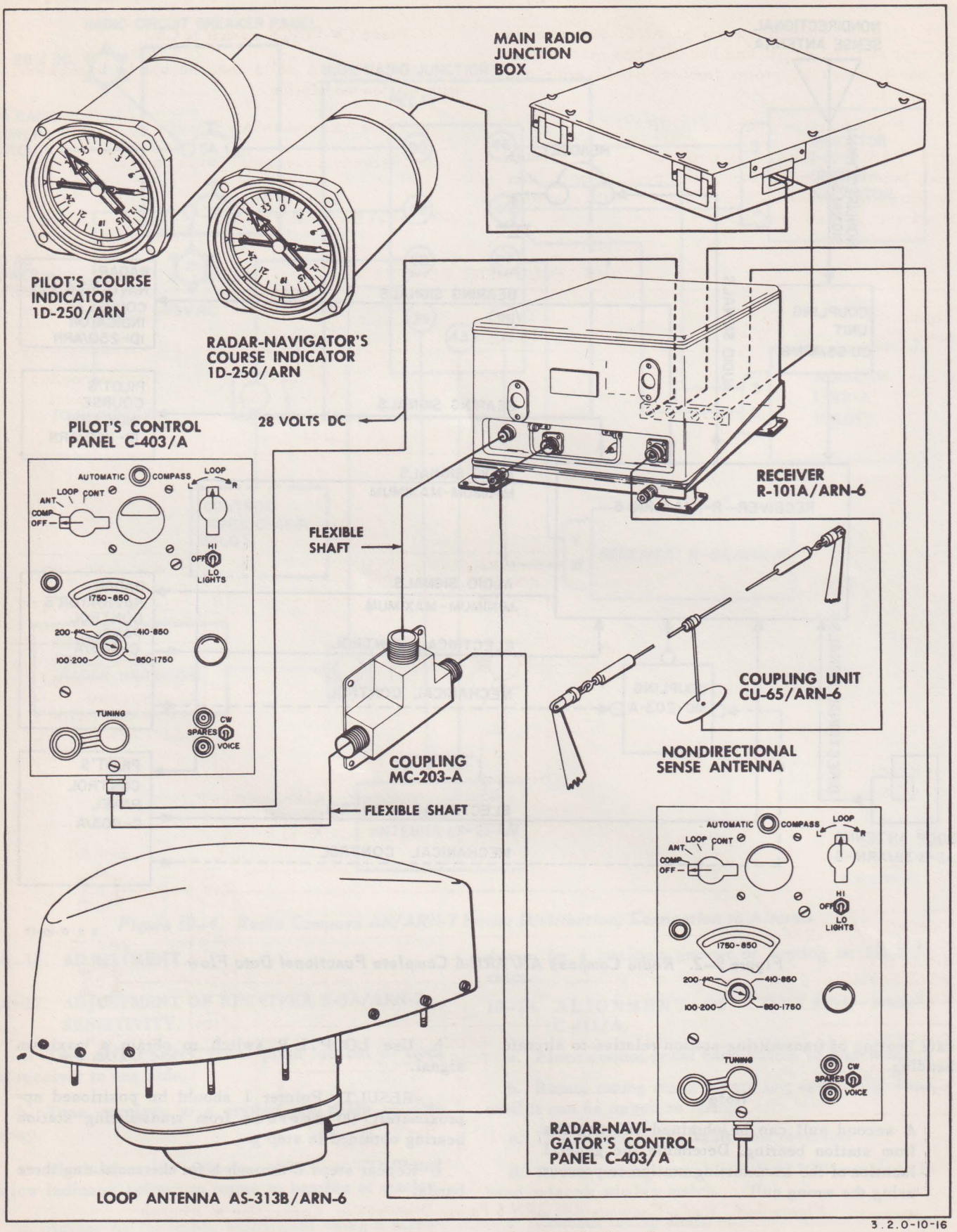

3.2.0-10-16

Figure 9–3. Radio Compass AN/ARN-6 Cabling Diagram

j. Place function switch at ANT. and tune in several stations on all four bands. When each station is tuned, check for proper frequency calibration and reception.

k. Place function switch at COMP.

RESULT: With 0 degrees at top of azimuth dial, pointer 1 should swing to a position so pointer indicates approximate bearing of transmitting station relative to aircraft heading.

l. Place CW-VOICE switch at CW.

RESULT: A solid tone should be heard along with station modulation.

m. Place function switch at OFF.

n. Disconnect electrical power source.

9-9. SYSTEM ANALYSIS.

TEST EQUIPMENT REQUIRED

Figure and Index NO.	Name	Type Designation	Alternate	Use and Application
(None)	MULTIMETER	AN/PSM-6	Multimeter, Federal Stock NO. 6625-649-4593	Troubleshooting radio compass AN/ARN-6.

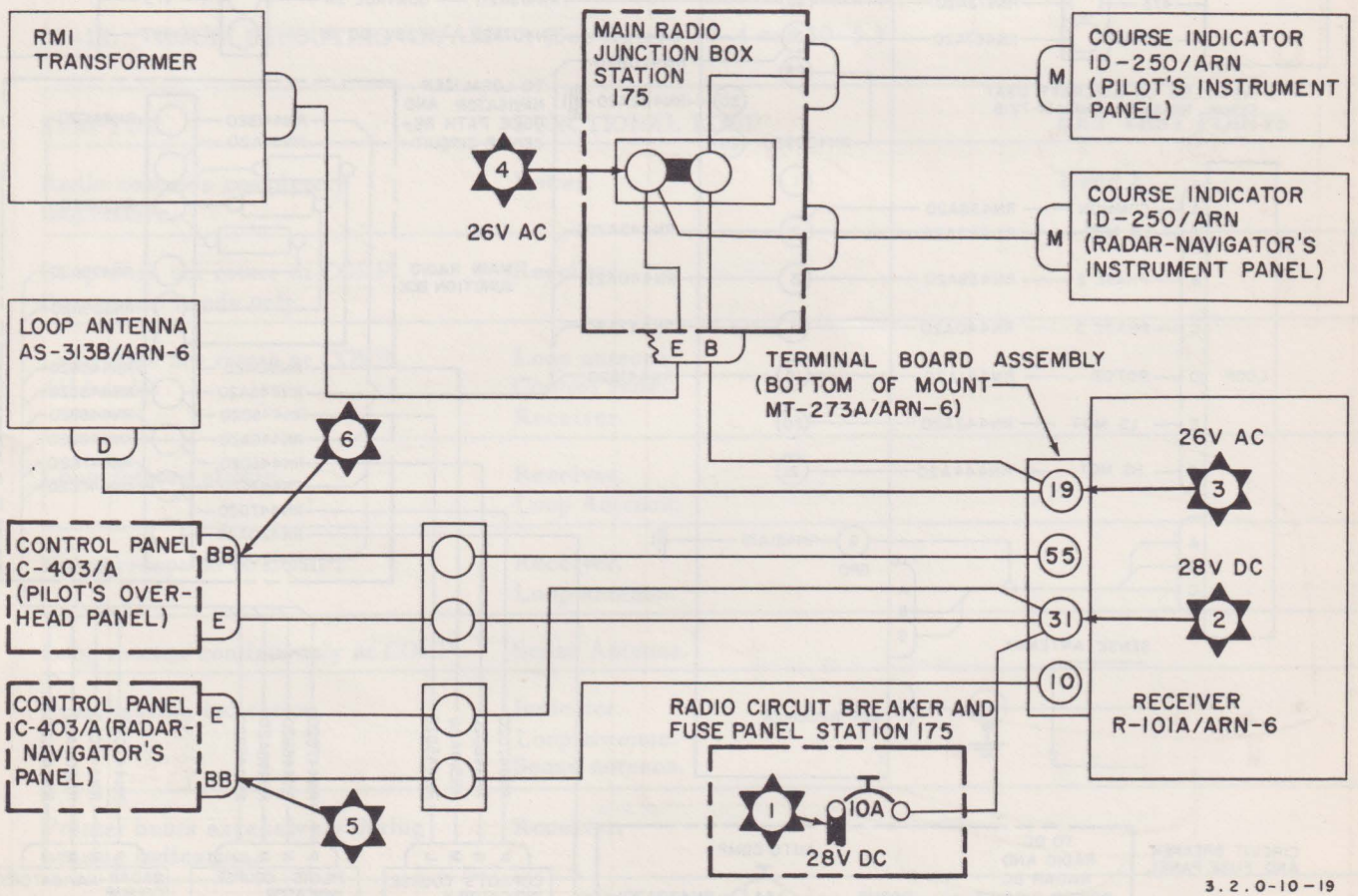

Figure 9-4. Radio Compass AN/ARN-6 Power Distribution, Connection to Aircraft

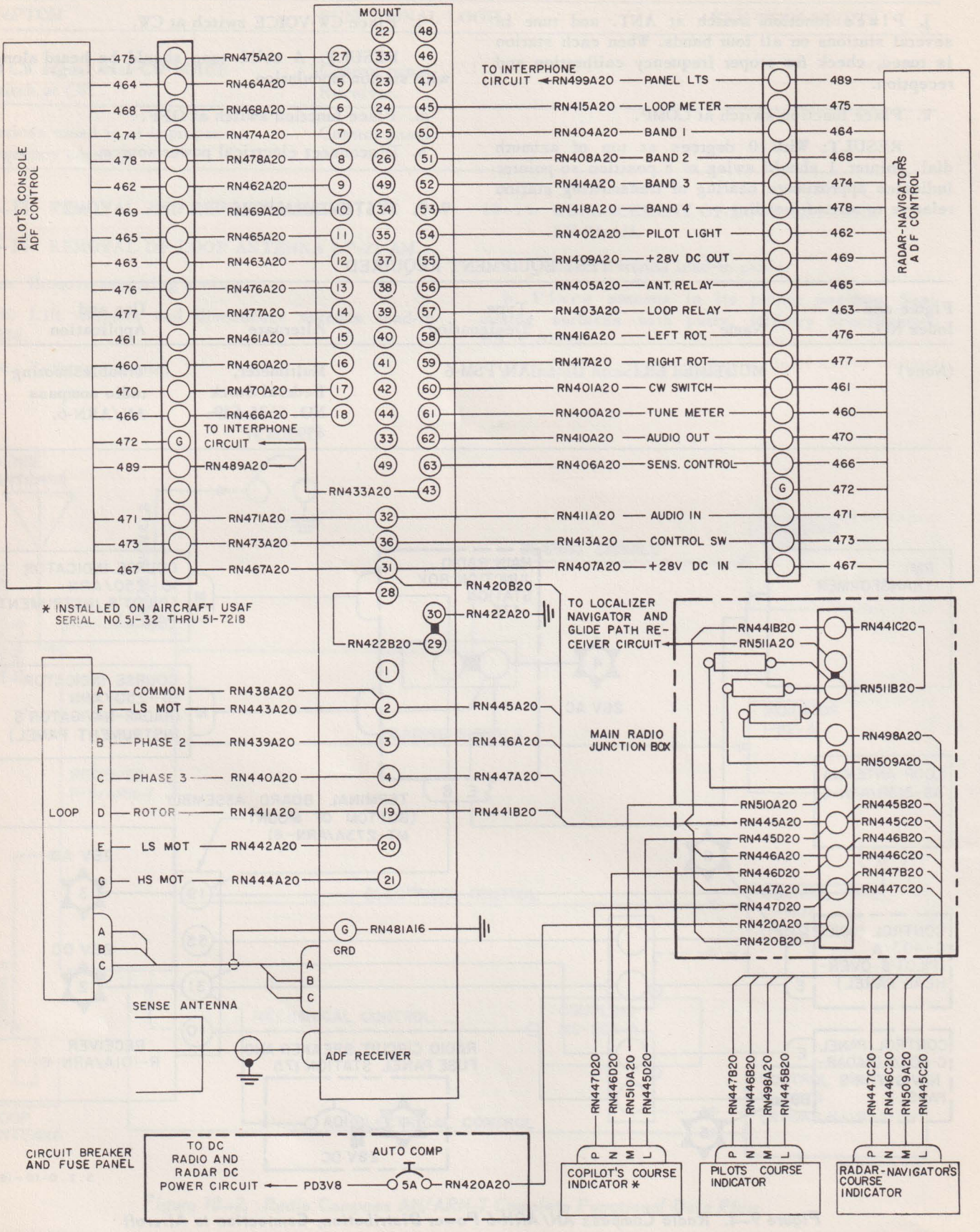

Figure 9–5. Radio Compass AN/ARN-6 System Intercabling

9–10. TROUBLESHOOTING AN/ARN-6. (See figures 9–4 and 9–5.)

SYMPTOM	FUNCTIONAL LOOP	KEY TEST POINTS
Set completely inoperative.	Power. Receiver.	1, 2, 3, 4, 5, and 6
No audio signal when function switch is at ANT. Normal at LOOP.	Sense Antenna. Antenna cable.	
Pointer 1 does not rotate when function switch is at LOOP; audio normal.	Receiver. Control panel.	
Pointer 1 does not rotate when function switch is at Comp; audio normal.	Receiver. Control panel.	
Pointer 1 does not rotate when function switch is at LOOP or COMP; audio normal.	Loop antenna.	

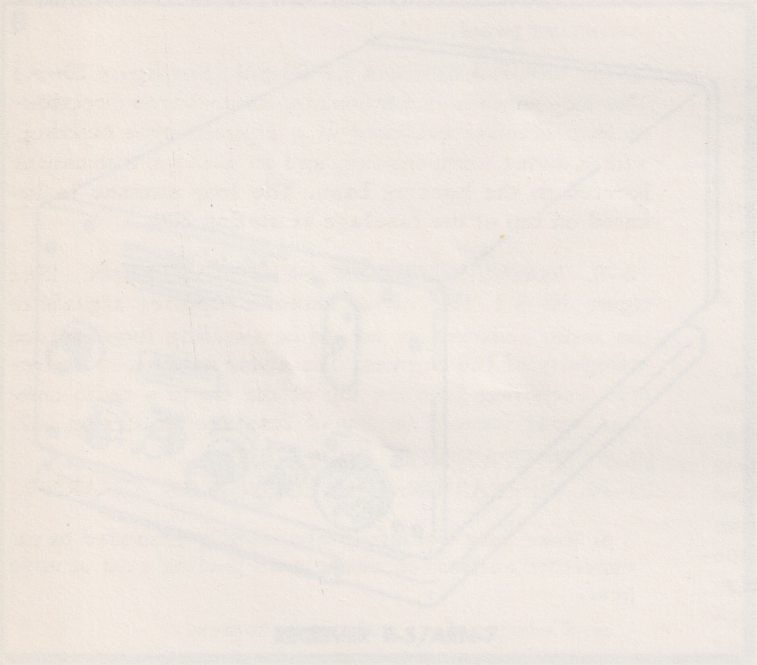

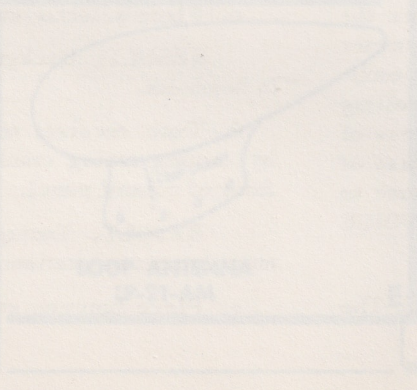

SECTION X

RADIO COMPASS AN/ARN-7

10–1. DESCRIPTION AND LEADING PARTICULARS.

10–2. This section comprises maintenance instructions for radio compass AN/ARN-7, installed in SA-16A and SA-16B aircraft. (See figure 10–1.) The radio compass is used as an airborne navigational aid. Characteristics of the radio compass make it possible to obtain automatic visual bearing indication of the source of radio signals received and simultaneous audio reception of the same signals, audio reception of modulated R-F signals with the nondirectional antenna, and audio and directional indication with the loop antenna. Principal components of the radio compass are a receiver, two control panels, two indicators, and two antennas. Figure 10–2 illustrates complete system data flow.

10–3. RECEIVER R-5A/ARN-7. (See figure 10–3.) The radio compass receiver contains the radio compass circuit elements, a circuit for providing audio identification of unmodulated radio stations, and a power transformer for operating the associated equipment. Connections are made from the compass receiver to the loop antenna, sense antenna control boxes, and indicators. The radio compass receiver is located in the flight deck compartment on the top shelf.

10–4. CONTROL PANEL C-411/A. (See figure 10–3.) Two radio compass control panels, one located on the pilot's overhead panel and one located on the radar-navigator's panel, are provided for remote operation of the radio compass. The band selector on the control panel provides selective control of any one of four bands desired. The function selector switch turns the equipment on and also selects the type of operation desired. The tuning crank tunes the receiver through the frequency range by means of the flexible tubing shaft connection. The LOOP L-R switch drives the loop antenna in the direction desired. The tuning meter is used to indicate when a station is tuned to maximum. Two potentiometers are provided, one controlling the audio level and one controlling the brightness of the panel lights. A CW-VOICE switch at the base of the control panel is installed to give an even tone to CW signals. This switch is normally left in VOICE position.

10–5. INDICATOR I-81-N. (See figure 10–3.) The indicator provides a visual indication of the direction of a received signal relative to the aircraft heading. An autosyn transmitter in the loop antenna assembly drives the indicator. The indicator scale is graduated from 0 to 360 degrees in increments of five degrees. The indicator is located on the pilot's instrument panel.

10–6. INDICATOR I-82-A. (See figure 10–3.) The indicator is an autosyn-driven indicator that indicates the angular position of the loop and gives the bearing of the signal source when the loop is at a true null. The indicator scale, which may be manually rotated, is graduated from 0 to 360 degrees in 1-degree increments. The indicator is located on the radar-navigator's instrument panel.

10–7. LOOP ANTENNA LP-21-AM. (See figure 10–3.) The loop antenna is a rotatable, motor-driven directional loop antenna enclosed in a zeppelin-type housing, with a motor, compensator, and an autosyn transmitter located in the housing base. The loop antenna is located on top of the fuselage at station 200.

10–8. NONDIRECTIONAL SENSE ANTENNA. (See figure 10–3.) The sense antenna supplies signals to the radio compass as an aid in avoiding loop antenna ambiguity of 180 degrees. The sense antenna is a wire-type extending from the top of the fin to a radio compass mast located on top of fuselage at station 162.

10–9. OPERATIONAL CHECKOUT.

10–10. OPERATIONAL CHECKOUT OF AN/ARN-7.

a. Make sure aircraft is electrically grounded to an unpainted surface on either main landing gear or nose gear.

b. Connect electrical power source.

c. Place selector switch on control panel at ANT.

RESULT: Background noise should be heard in headsets.

d. Tune receiver over its entire frequency range by turning tuning crank and band selector switch on front of control panel.

RESULT: Tuning meter should indicate maximum current as stations are tuned.

e. Place function switch at LOOP.

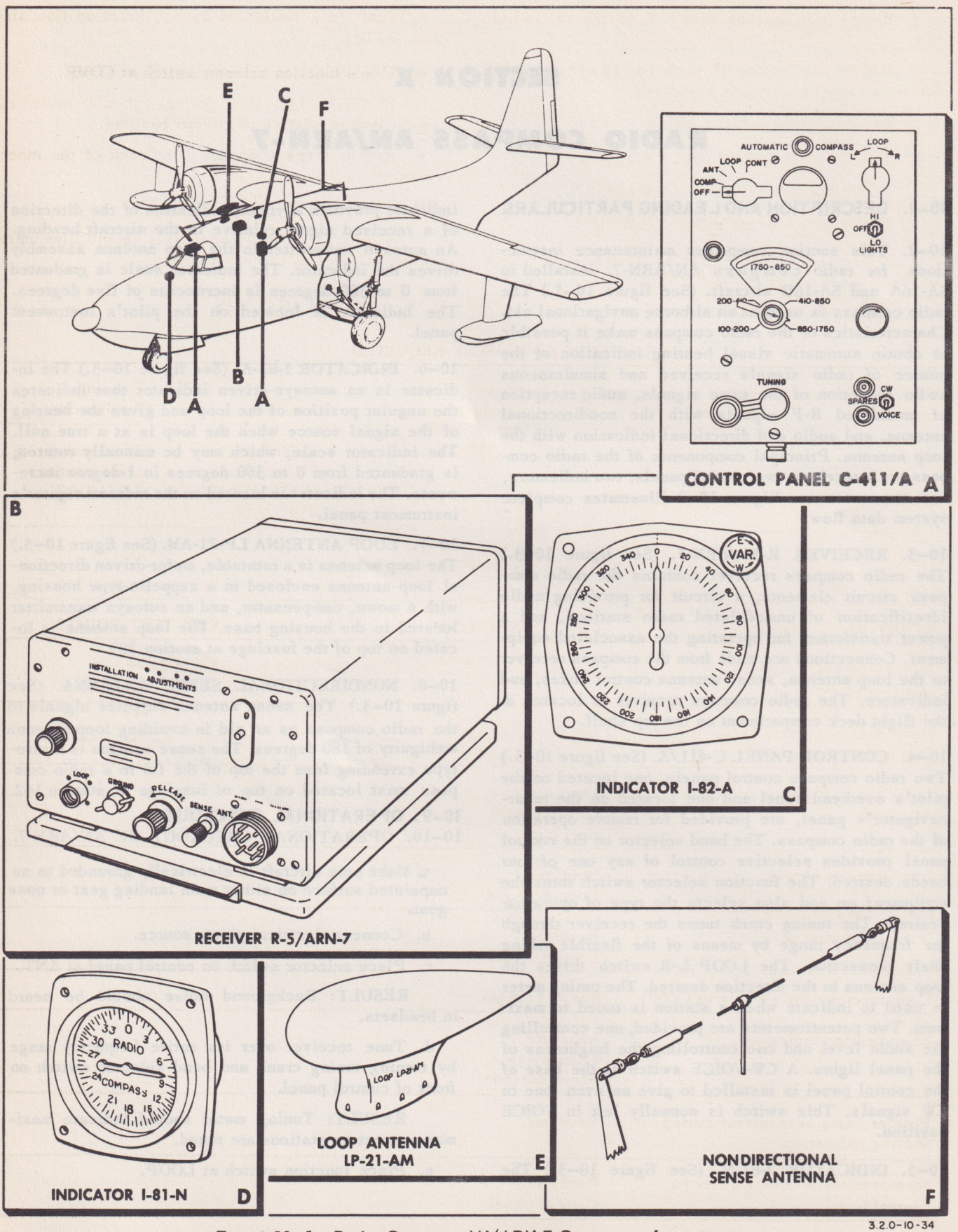

3.2.0-10-34

Figure 10–1. Radio Compass AN/ARN-7 Component Locations

f. Rotate loop antenna with L-R switch on control box.

RESULT: Pointer of each indicator should rotate in same direction as loop.

g. Place function selector switch at ANT.

h. Tune in a station and peak tuning meter.

i. Place function selector switch at LOOP.

j. Rotate loop antenna either left or right.

RESULT: The tuning meter should reach a null (a sharp dip in tuning meter reading).

k. Place function selector switch at ANT.

l. Tune in a station of known direction from aircraft heading.

m. Place function selector switch at COMP.

RESULT: Indicator pointer should move to proper bearing relative to aircraft heading.

n. Repeat steps j through l on each of the other bands.

o. Turn light control fully clockwise.

RESULT: Control panel light should illuminate and get brighter as control is rotated.

10–11. SYSTEM ANALYSIS.

TEST EQUIPMENT REQUIRED

Figure and Index NO.	Name	Type Designation	Alternate	Use and Application
(None)	MULTIMETER	AN/PSM-6	Multimeter, Federal Stock NO. 6625-649-4593	Troubleshooting radio compass AN/ARN-7.

10–12. TROUBLESHOOTING AN/ARN-7. (See figures 10–4 and 10–5.)

SYMPTOM	FUNCTIONAL LOOP	KEY TEST POINTS
Radio compass completely inoperative.	Power.	1 and 2
Loop does not rotate at COMP. One or two bands only.	Receiver.	
Loop does not rotate at COMP. All bands.	Loop antenna. Control panel. Receiver.	
Loop rotates slowly.	Receiver. Loop Antenna.	
Noisy reception at COMP.	Receiver. Loop antenna.	
Loop rotates continuously at COMP.	Sense Antenna.	
Error bearing indication.	Indicator. Loop antenna. Sense antenna.	
Pointer hunts excessively during bearing indication.	Receiver.	
No movement of tuning meter on control box.	Receiver. Control panel.	

SYMPTOM	FUNCTIONAL LOOP	KEY TEST POINTS
No CW signal with CW-VOICE switch at CW.	Control panel. Receiver.	
Stations tuned in at improper frequency setting.	Control panel.	

10–13. REMOVAL AND REPLACEMENT.

10–14. REMOVAL OF LOOP ANTENNA LP-21-AM.

a. Remove attaching screws.

b. Lift antenna and disconnect antenna lead-in cable.

c. Remove antenna.

10–15. REPLACEMENT OF LOOP ANTENNA LP-21-AM.

a. Connect antenna lead-in cable.

b. Place antenna in its proper position. Seal mating surfaces with putty, Military Specification MIL-P-8116.

c. Install attaching screws.

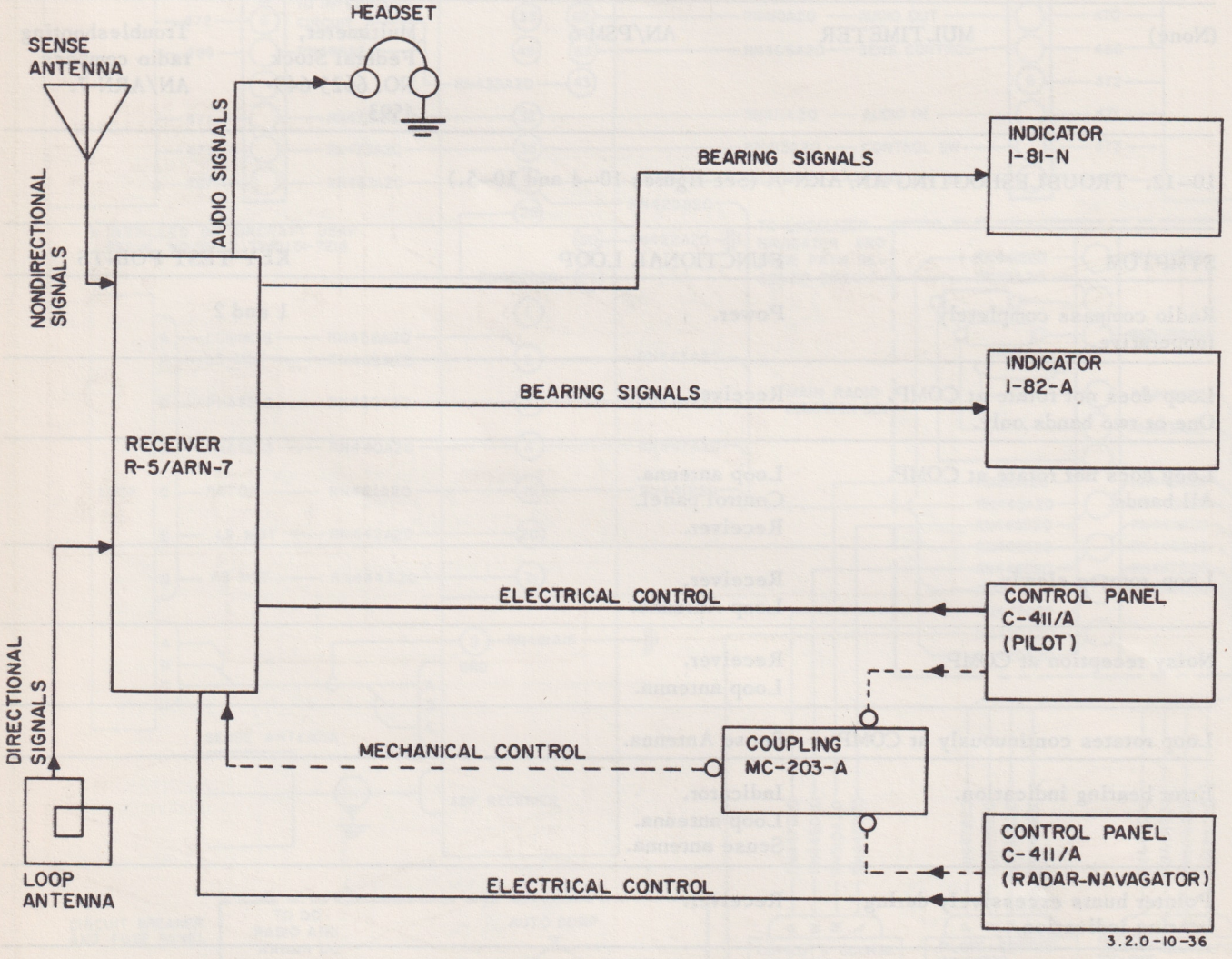

Figure 10–2. Radio Compass AN/ARN-7 Complete Functional Data Flow

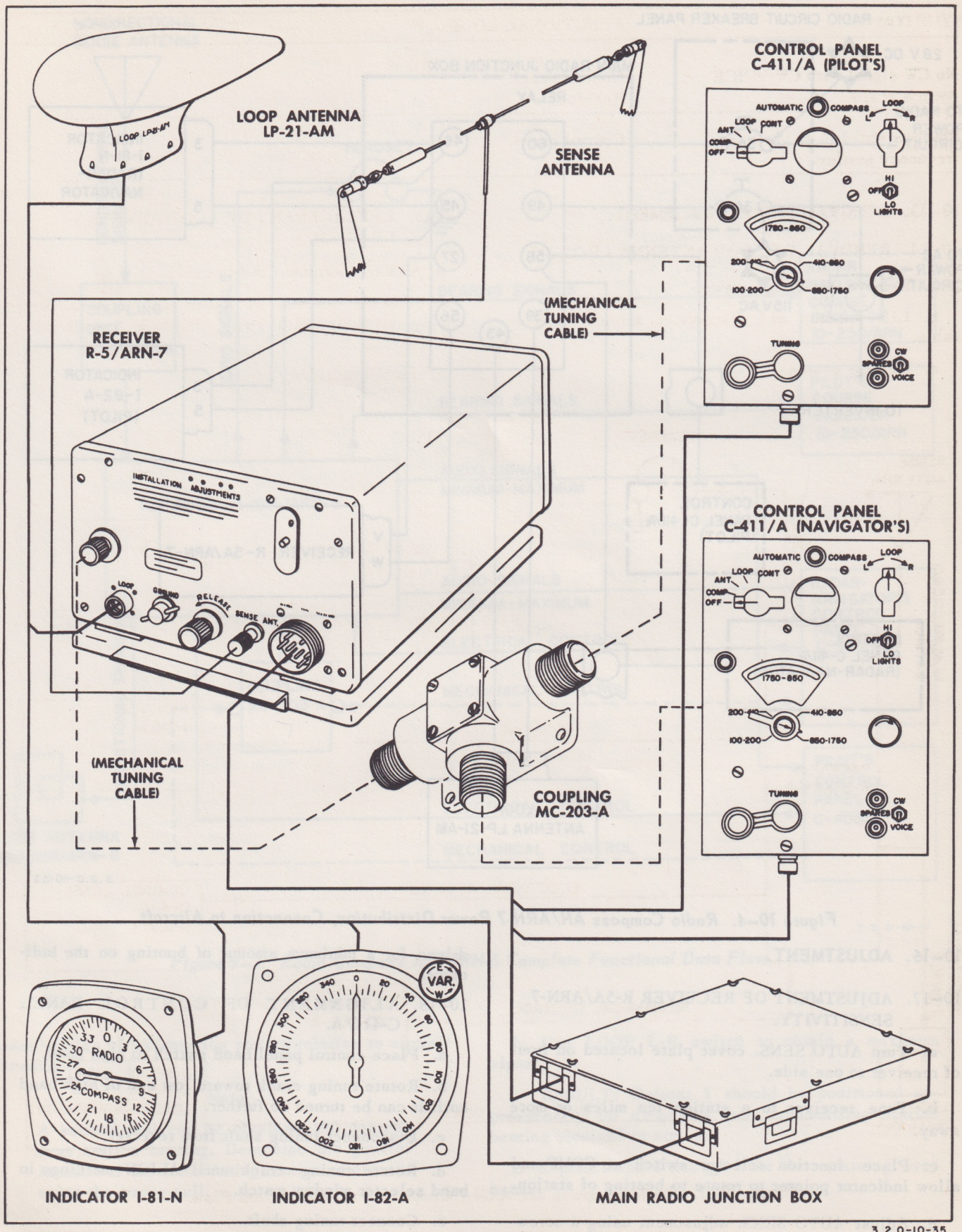

3.2.0-10-35

Figure 10–3. Radio Compass AN/ARN-7 Cabling Diagram

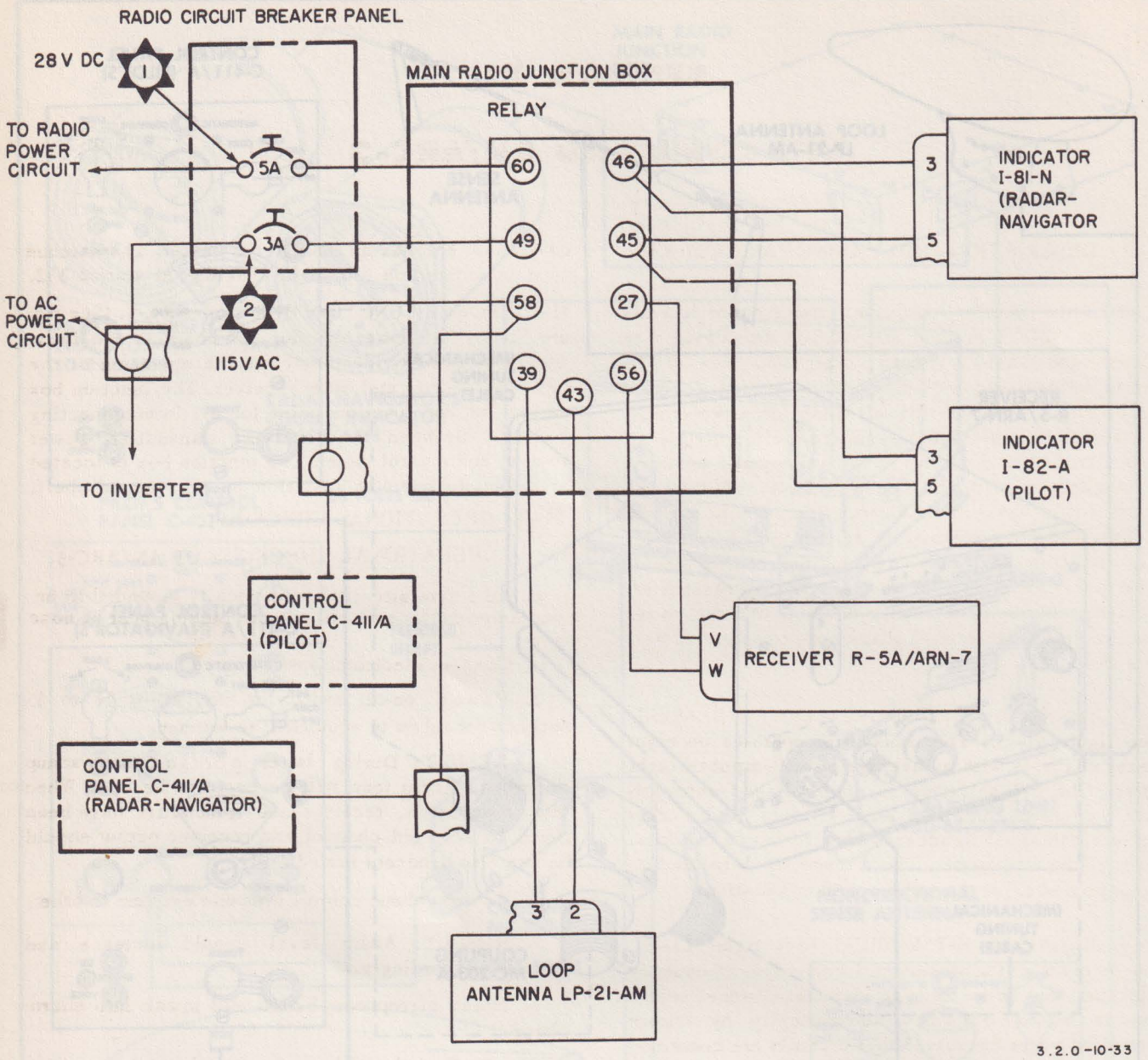

Figure 10–4. Radio Compass AN/ARN-7 Power Distribution, Connection to Aircraft

10–16. ADJUSTMENT.

10–17. ADJUSTMENT OF RECEIVER R-5A/ARN-7 SENSITIVITY.

a. Turn AUTO SENS. cover plate located on front of receiver to one side.

b. Tune receiver to a station ten miles or more away.

c. Place function selector switch at COMP and allow indicator pointer to rotate to bearing of station.

d. Adjust AUTO SENS. adjustment using a screwdriver for a minimum amount of hunting on the indicator.

10–18. ALIGNMENT OF CONTROL PANEL C-411/A.

a. Place control panel band switch to high band.

b. Rotate tuning crank toward low end of high band until it can be turned no further.

c. Disconnect tuning shaft from receiver.

d. Rotate tuning crank until ALIGN markings in band selector window match.

e. Connect tuning shaft.

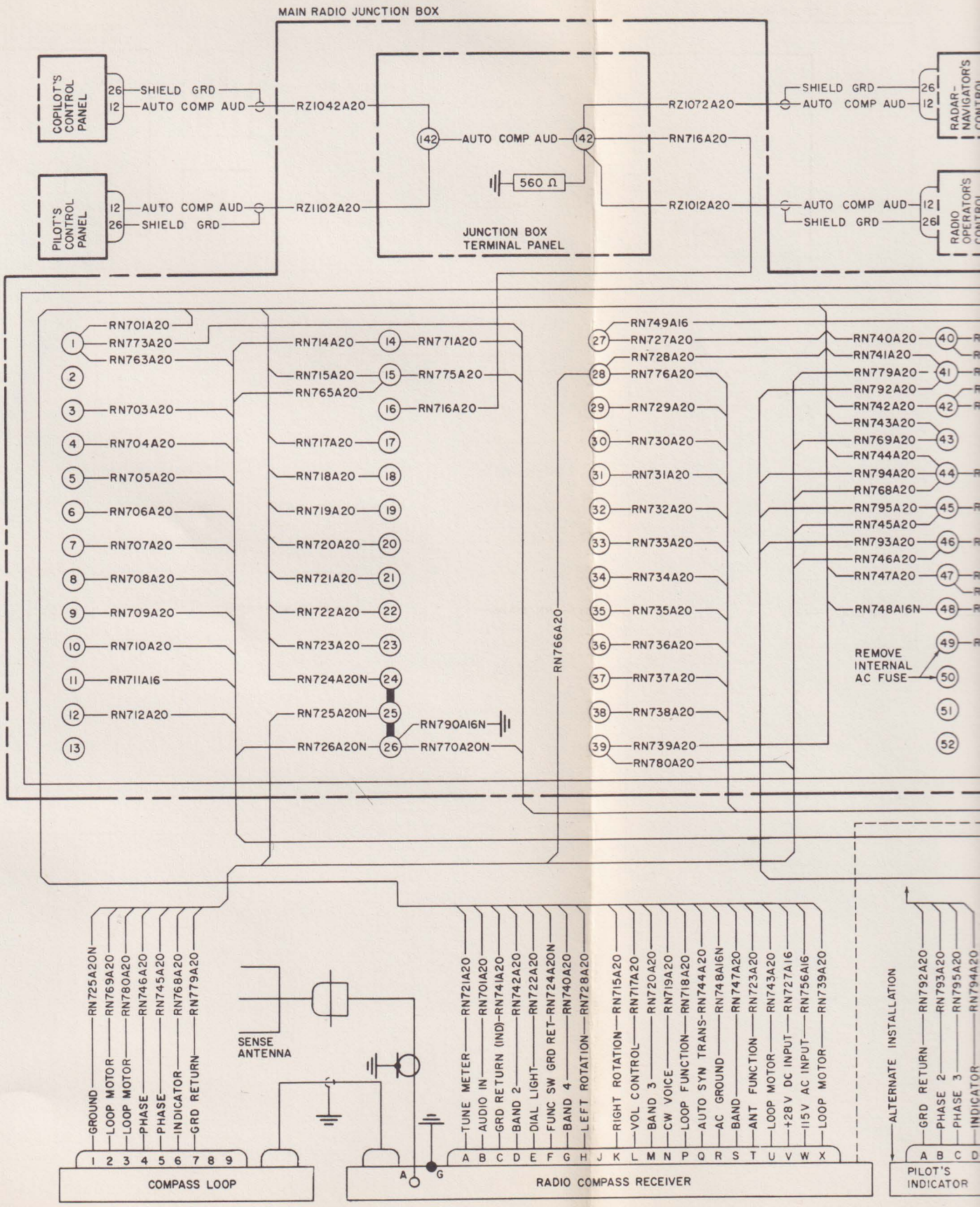

Figure 10–5. Radio Compass AN/ARN-7 System Intercabling

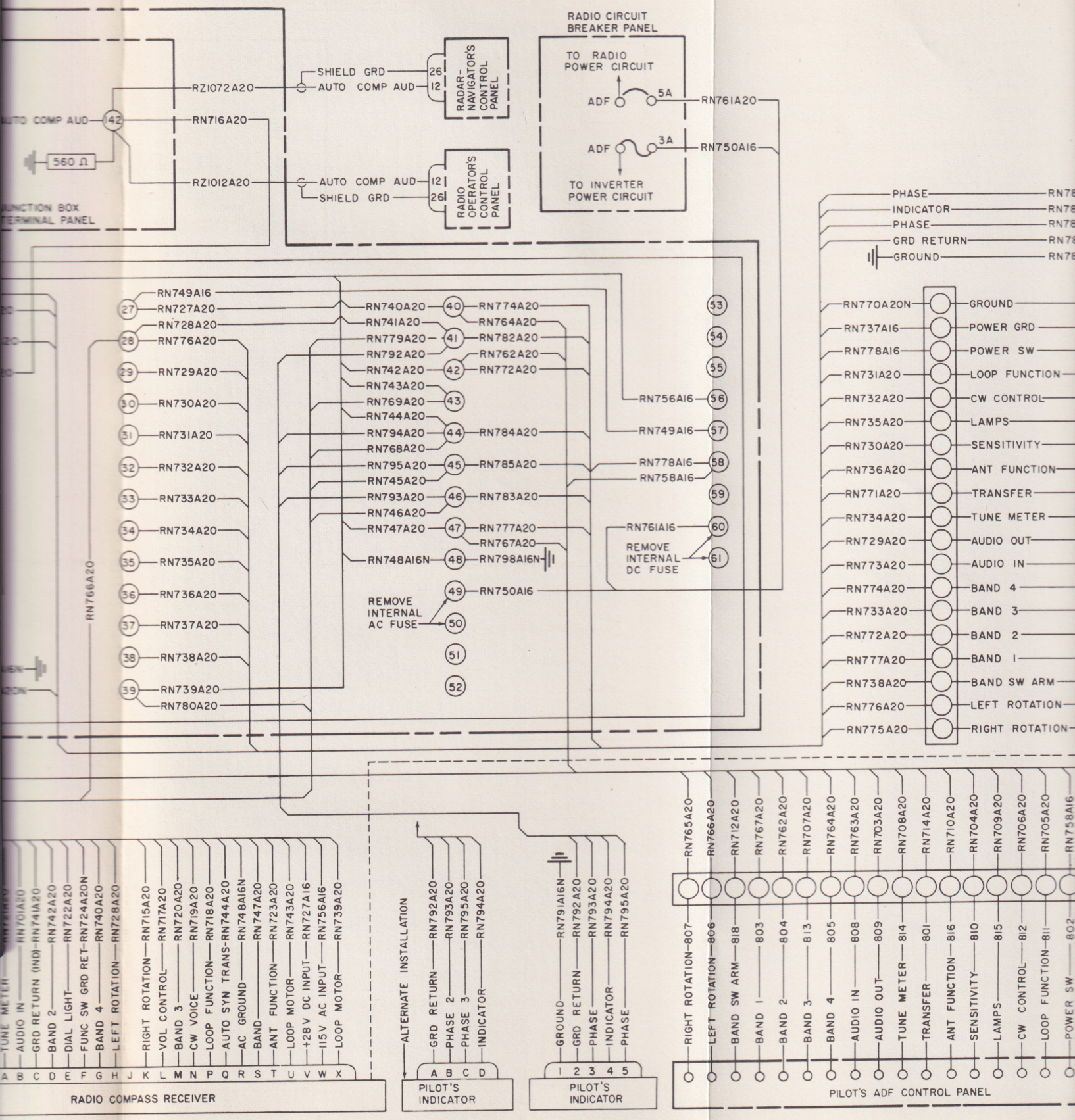

s AN/ARN-7 System Intercabling

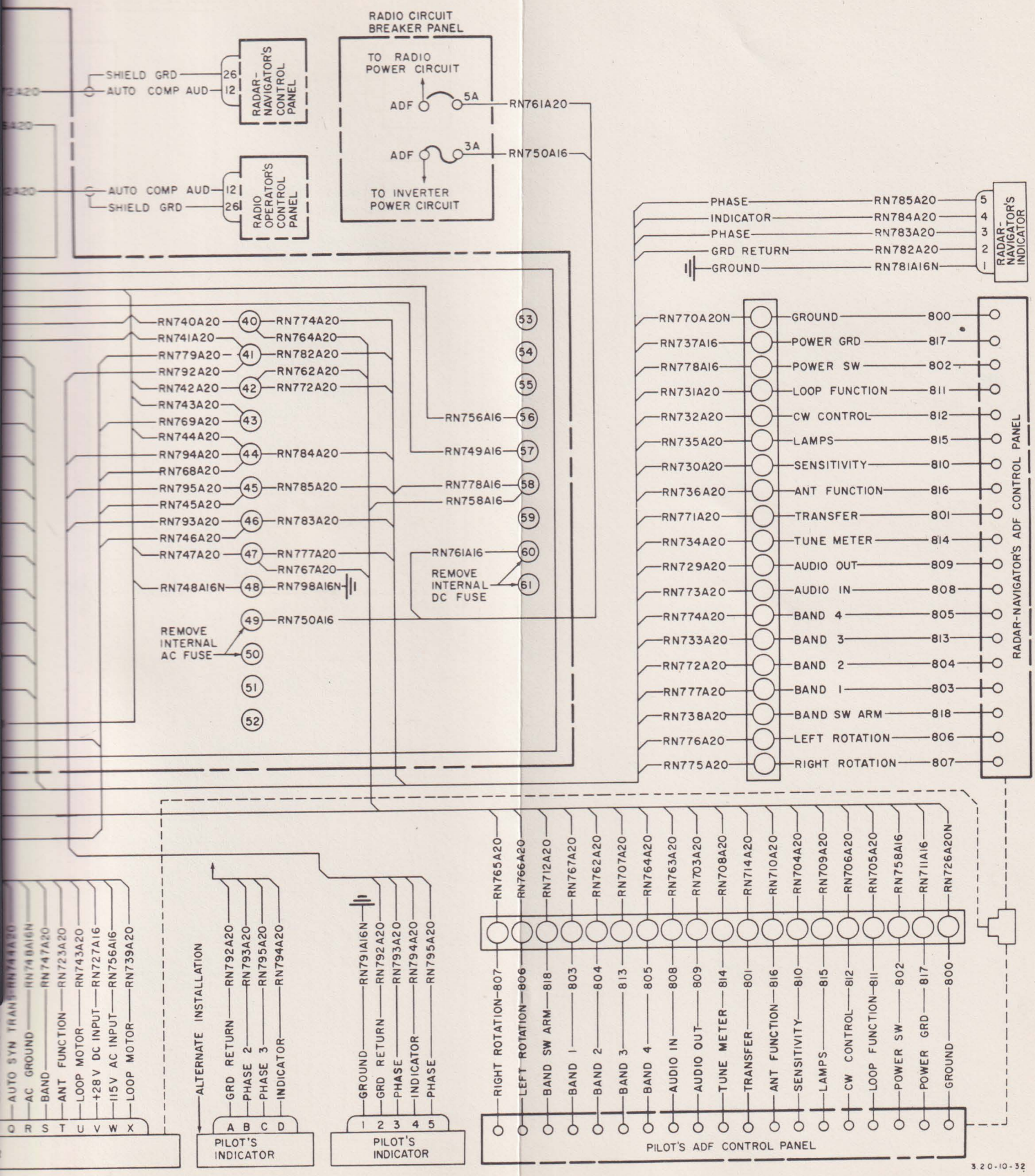
RADIO CIRCUIT BREAKER PANEL
TO RADIO POWER CIRCUIT
ADF
5A
RN761A20
ADF
3A
RN750A16
TO INVERTER POWER CIRCUIT
SHIELD GRD
AUTO COMP AUD
26
12
RADAR-NAVIGATOR'S CONTROL PANEL
AUTO COMP AUD
SHIELD GRD
12
26
RADIO OPERATOR'S CONTROL PANEL
PHASE
INDICATOR
PHASE
GRD RETURN
GROUND
RN785A20
RN784A20
RN783A20
RN782A20
RN781A16N
5
4
3
2
1
RADAR-NAVIGATOR'S INDICATOR
RN740A20
RN741A20
RN779A20
RN792A20
RN742A20
RN743A20
RN769A20
RN744A20
RN794A20
RN768A20
RN795A20
RN745A20
RN793A20
RN746A20
RN747A20
RN748A16N
40
41
42
43
44
45
46
47
48
RN774A20
RN764A20
RN782A20
RN762A20
RN772A20
RN784A20
RN785A20
RN783A20
RN777A20
RN767A20
RN798A16N
53
54
55
56
57
58
59
60
61
RN756A16
RN749A16
RN778A16
RN758A16
RN761A16
REMOVE INTERNAL DC FUSE
REMOVE INTERNAL AC FUSE
49
50
51
52
RN750A16
RN770A20N
RN737A16
RN778A16
RN731A20
RN732A20
RN735A20
RN730A20
RN736A20
RN771A20
RN734A20
RN729A20
RN773A20
RN774A20
RN733A20
RN772A20
RN777A20
RN738A20
RN776A20
RN775A20
GROUND
POWER GRD
POWER SW
LOOP FUNCTION
CW CONTROL
LAMPS
SENSITIVITY
ANT FUNCTION
TRANSFER
TUNE METER
AUDIO OUT
AUDIO IN
BAND 4
BAND 3
BAND 2
BAND 1
BAND SW ARM
LEFT ROTATION
RIGHT ROTATION
800
817
802
811
812
815
810
816
801
814
809
808
805
813
804
803
818
806
807
RADAR-NAVIGATOR'S ADF CONTROL PANEL
AUTO SYN TRANS RN744A20
AC GROUND RN748A16N
BAND RN747A20
ANT FUNCTION RN723A20
LOOP MOTOR RN743A20
+28 V DC INPUT RN727A16
115 V AC INPUT RN756A16
LOOP MOTOR RN739A20
Q R S T U V W X
ALTERNATE INSTALLATION
GRD RETURN RN792A20
PHASE 2 RN793A20
PHASE 3 RN795A20
INDICATOR RN794A20
A B C D
PILOT'S INDICATOR
GROUND RN791A16N
GRD RETURN RN792A20
PHASE RN793A20
INDICATOR RN794A20
PHASE RN795A20
1 2 3 4 5
PILOT'S INDICATOR
RN765A20
RN766A20
RN712A20
RN767A20
RN762A20
RN707A20
RN764A20
RN763A20
RN703A20
RN708A20
RN714A20
RN710A20
RN704A20
RN709A20
RN706A20
RN705A20
RN758A16
RN711A16
RN726A20N
RIGHT ROTATION 807
LEFT ROTATION 806
BAND SW ARM 818
BAND 1 803
BAND 2 804
BAND 3 813
BAND 4 805
AUDIO IN 808
AUDIO OUT 809
TUNE METER 814
TRANSFER 801
ANT FUNCTION 816
SENSITIVITY 810
LAMPS 815
CW CONTROL 812
LOOP FUNCTION 811
POWER SW 802
POWER GRD 817
GROUND 800
PILOT'S ADF CONTROL PANEL
3.20-10-32

SECTION XI

VHF COMMAND AN/ARC-3

11-1. DESCRIPTION AND LEADING PARTICULARS.

11-2. This section comprises maintenance instructions for VHF Command AN/ARC-3, installed in SA-16A and SA-16B aircraft. (See figure 11-1.) The set is an airborne receiving and transmitting equipment designed to provide air-to-air or air-to-ground communication on eight crystal-controlled frequency channels within the 100-156 MC range, and operates in conjunction with the homing adapter AN/ARA-8A as an aid to navigation. Remote operation of the set on any frequency channel is accomplished by selecting the desired channel on the control panel. Principal components of the set are a transmitter, receiver, control panel, antenna mast, and the power junction box. Figure 11-2 illustrates complete system data flow.

11-3. TRANSMITTER T-67/ARC-3 OR T-67B/ARC-3. (See figure 11-3.) The transmitter operates on eight preset channels with an average power output of eight watts. Channel selection is accomplished automatically by remote controlled motor circuits. Radio crystals are contained in sockets located inside the front cover of the transmitter. The transmitter is located on the bottom shelf at the radio operator's station.

11-4. RECEIVER R-77A/ARC-3. (See figure 11-3.) The receiver contains standard heterodyne, frequency selection, and noise limiting circuits. Channel selection is accomplished automatically by remote controlled motor circuits. Radio crystals are contained in sockets located inside the front cover. The receiver is located at the radio operator's station on the bottom shelf.

11-5. CONTROL PANEL C-404/A OR C-404A/A. (See figure 11-3.) The control panel provides remote control of the transmitter and receiver. Controls located on the control panel are the channel selector switch, transmitter tone switch, volume control, and an on-off switch. The control panel is located on the pilot's overhead panel.

11-6. ANTENNA MAST AN-104-B. (See figure 11-3.) The antenna mast consists of a hardwood oval-shaped rib approximately 31 inches in length. The antenna element and transmission line are housed in a drilled cavity that extends up through the center. The antenna mast is located on top of the fuselage at station 332.

11-7. POWER JUNCTION BOX J-68/ARC-3. (See figure 11-3.) The power junction box contains two dynamotors which provide power for the operation of the radio transmitter and radio receiver. The junction box serves as the junction point for all interconnecting cables between the receiver, transmitter, power source, and control panel. The junction box is located at the radio operator's station on the second shelf.

11-8. OPERATIONAL CHECKOUT.

11-9. OPERATIONAL CHECKOUT OF AN/ARC-3.

a. Make sure aircraft is electrically grounded to an unpainted surface on either main landing gear or nose gear.

b. Connect electrical power source.

c. Place on-off switch at ON, allow 30 to 45 seconds for tubes in equipment to warmup.

RESULT: During latter portion of warmup period, an audio tone will be heard in headset. When this tone stops, receiver and transmitter have been tuned to selected channel and receiver output should be heard in headsets immediately.

d. Rotate volume control from one extreme to other.

RESULT: Audio level should increase and decrease accordingly.

e. Press microphone button and speak into microphone.

RESULT: Speech (sidetone) which modulates transmitter should be heard in headset.

f. Establish two-way radio communication with an aircraft in flight or with control tower.

RESULT: Transmission and reception of radio communication should be accomplished.

g. Press D/F button.

RESULT: A steady tone should be heard in headset.

h. Rotate channel selector switch through all eight channels slow enough to allow channel selecting mechanism to operate.

RESULT: The transmitter and receiver should

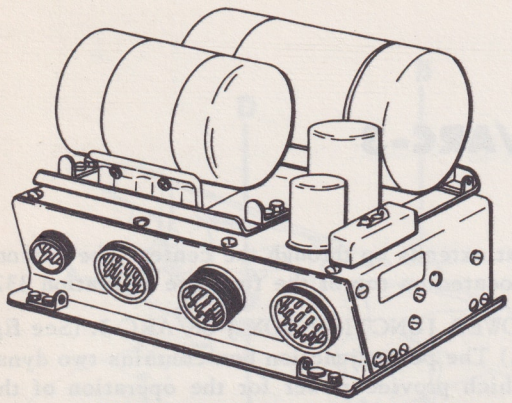

POWER JUNCTION BOX J-68/ARC-3

A

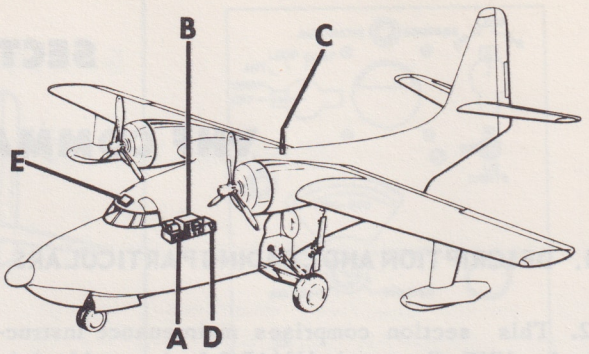

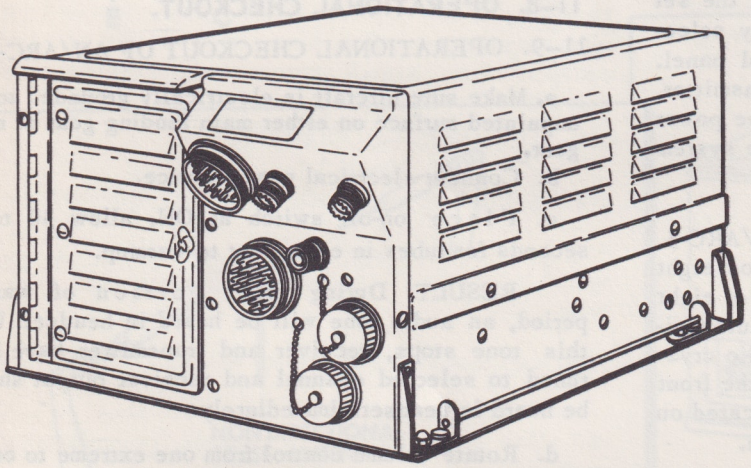

TRANSMITTER T-67/ARC-3 OR T-67B/ARC-3

B

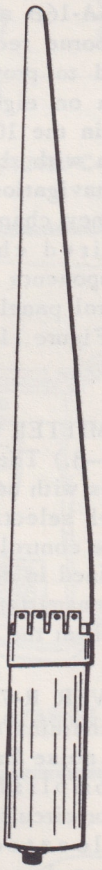

ANTENNA MAST AN-104-B

C

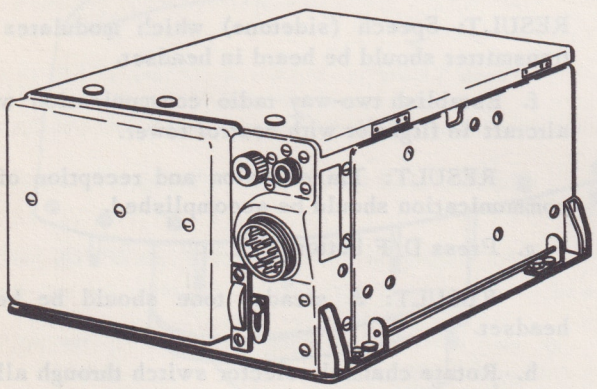

RECEIVER R-77A/ARC-3

D

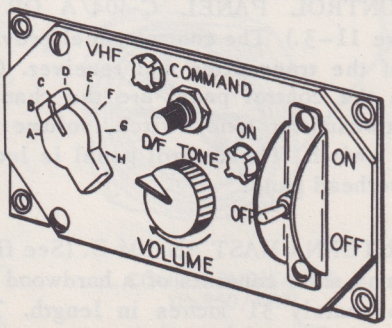

CONTROL PANEL C-404/A OR C-404A/A

E

3.2.0-10-86

Figure 11-1. VHF Command AN/ARC-3 Component Locations

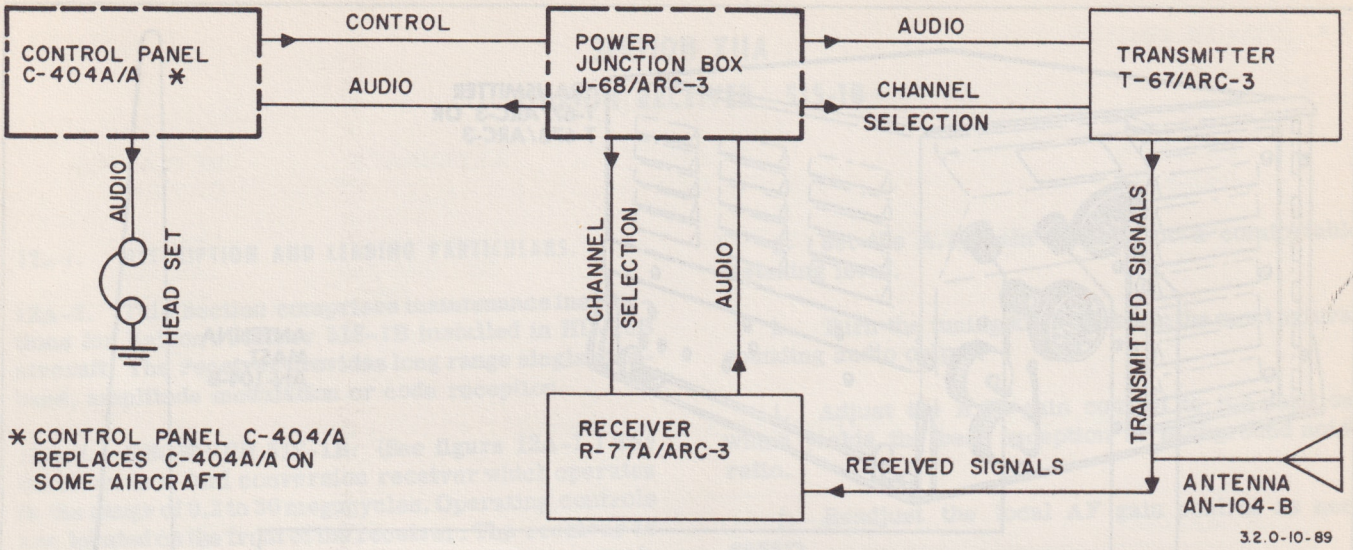

Figure 11-2. VHF Command AN/ARC-3 Complete Functional Data Flow

tune to each selected channel in approximately two seconds. An audio tone should be heard while equipment is tuning.

i. Place on-off switch at OFF.

j. Disconnect electrical power source.

11-10. SYSTEM ANALYSIS.

TEST EQUIPMENT REQUIRED

Figure and Index NO.	Name	Type Designation	Alternate	Use and Application
(None)	MULTIMETER	AN/PSM-6	Multimeter, Federal Stock NO. 6625-649-4593	Troubleshooting VHF command AN/ARC-3.

11-11. TROUBLESHOOTING AN/ARC-3. (See figures 11-4 and 11-5.)

SYMPTOM	FUNCTIONAL LOOP	KEY TEST POINTS
Complete set inoperative.	Power.	1 and 2
Incorrect channel selection in transmitter for channel selected on control panel.	Transmitter. Control panel.	
Incorrect channel selection in receiver for channel selected on control panel.	Receiver. Control panel.	
No transmission or reception.	Transmitter. Receiver. Antenna.	
No MCW operation.	Transmitter.	

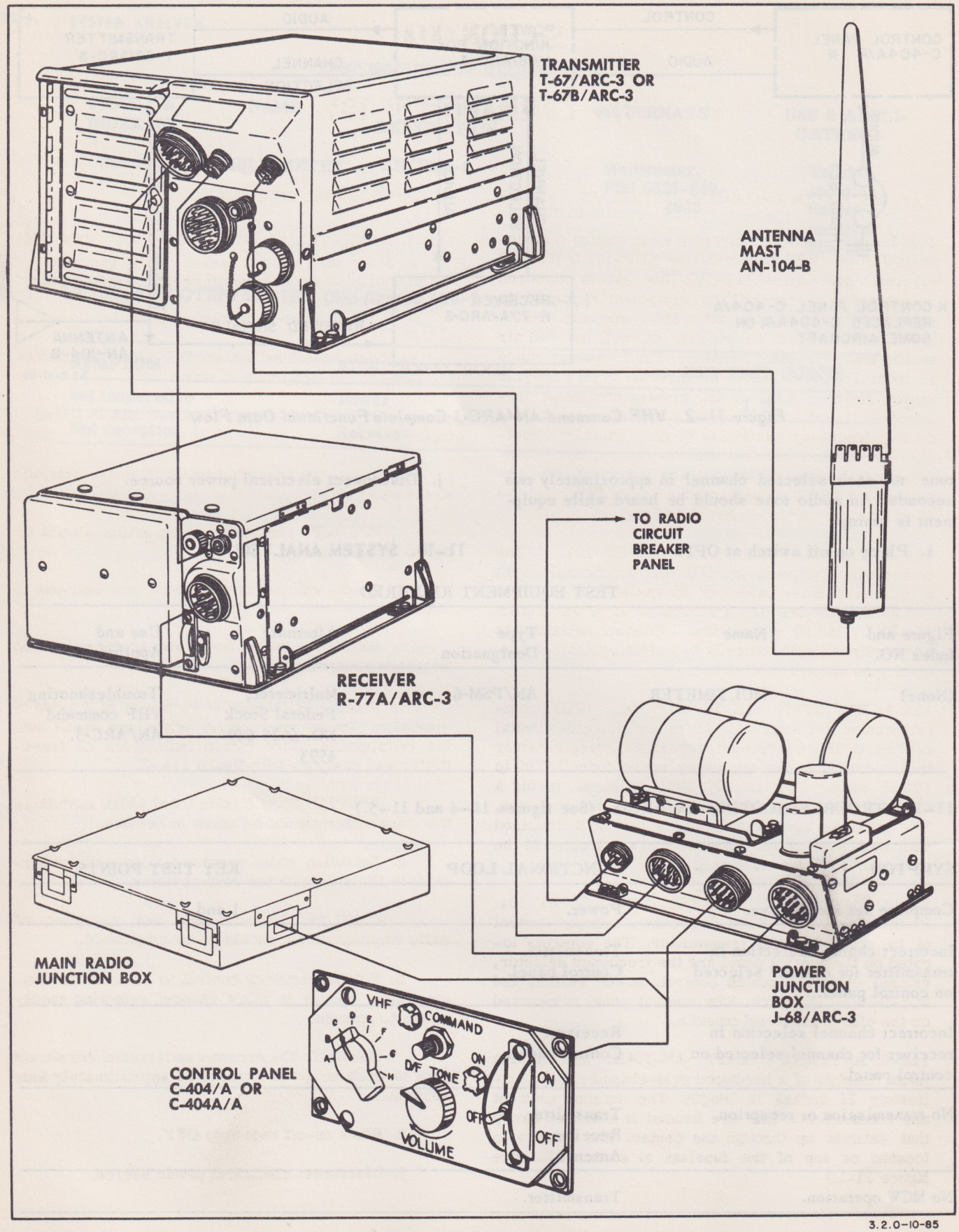

Figure 11–3. VHF Command AN/ARC-3 Cabling Diagram

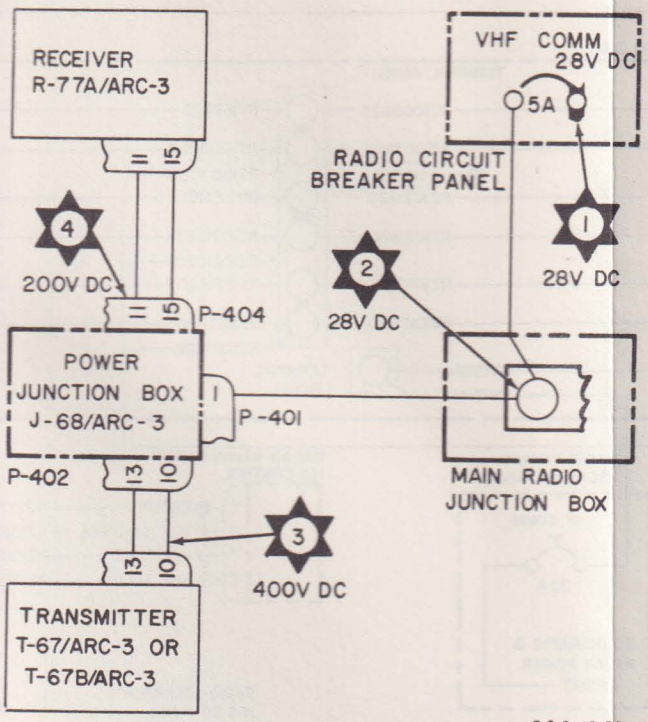

Figure 11-4. VHF Command AN/ARC-3 Power Distribution, Connection to Aircraft

11-12. REMOVAL AND REPLACEMENT.

11-13. REMOVAL OF ANTENNA MAST AN-104-B.

a. Disconnect antenna sheath from skin of aircraft.

b. Remove bracket securing antenna mast to aircraft.

c. Disconnect transmission line from antenna.

d. Remove antenna mast.

11-14. REPLACEMENT OF ANTENNA MAST AN-104-B.

a. Connect transmission line to antenna mast.

b. Position antenna mast and install bracket attaching antenna mast to aircraft. Seal mating surfaces with putty, Military Specification MIL-P-8116.

c. Connect antenna sheath to skin of aircraft.

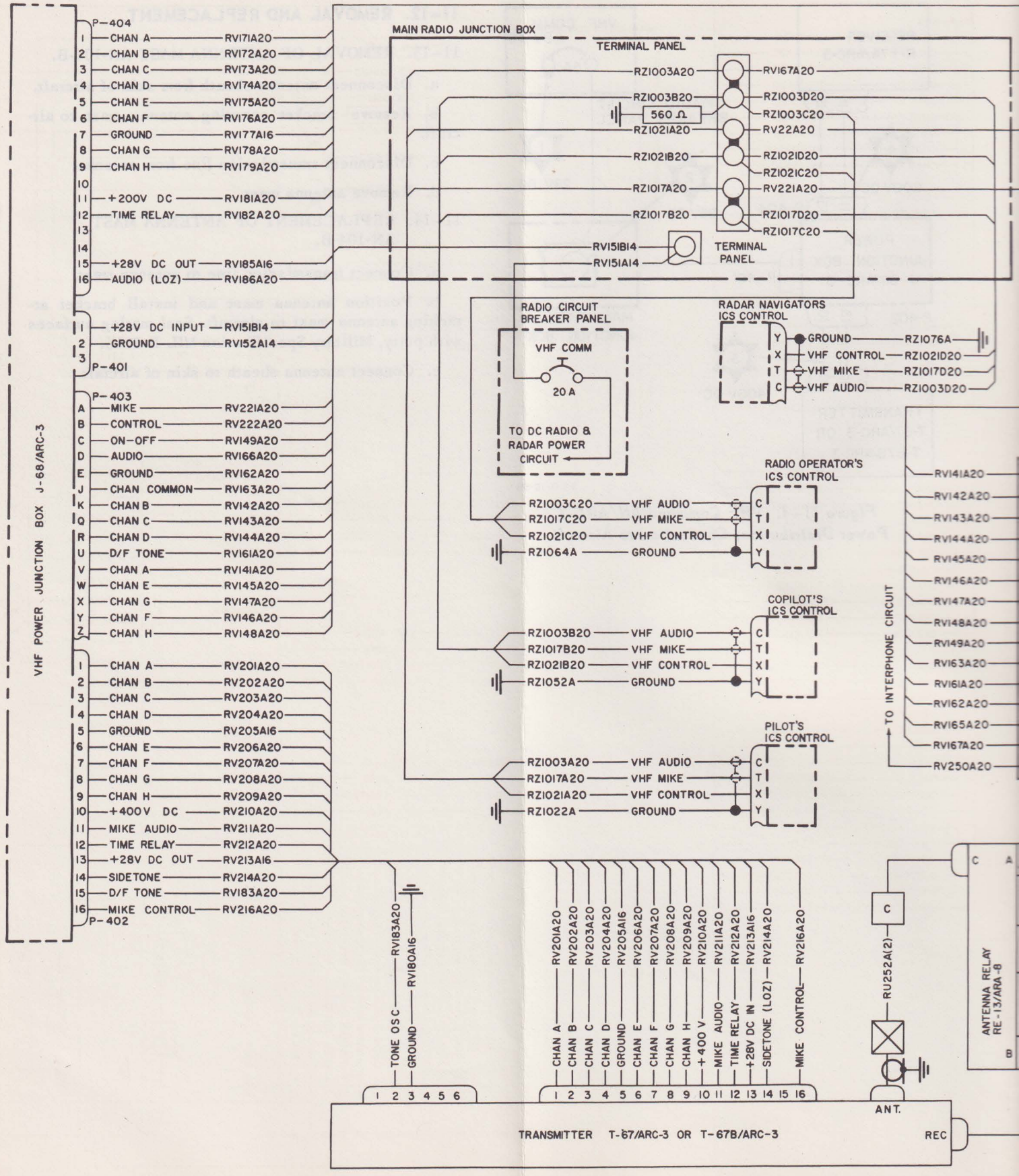

Figure 11–5. VHF Command AN/AR

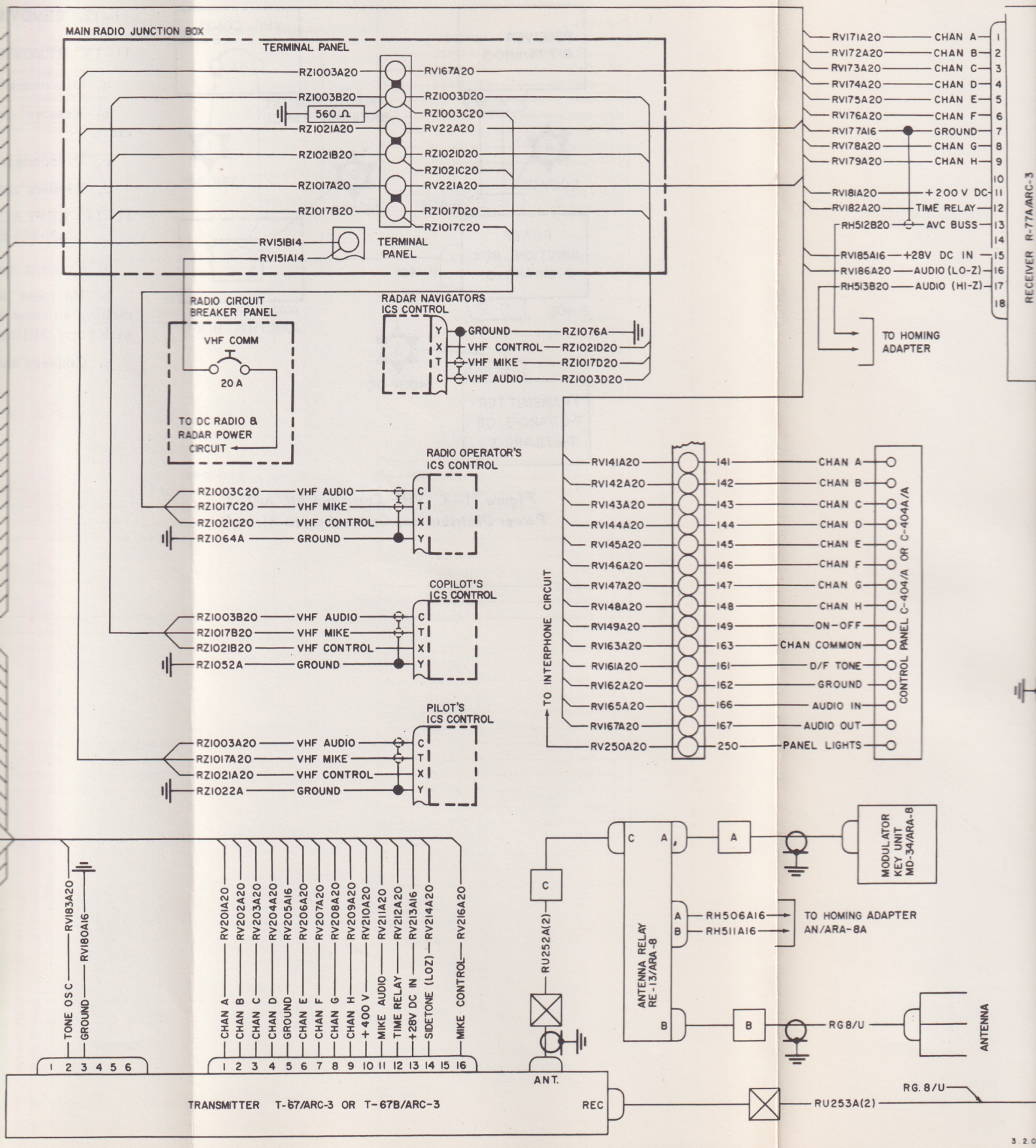

Figure 11–5. VHF Command AN/ARC-3 System Intercabling

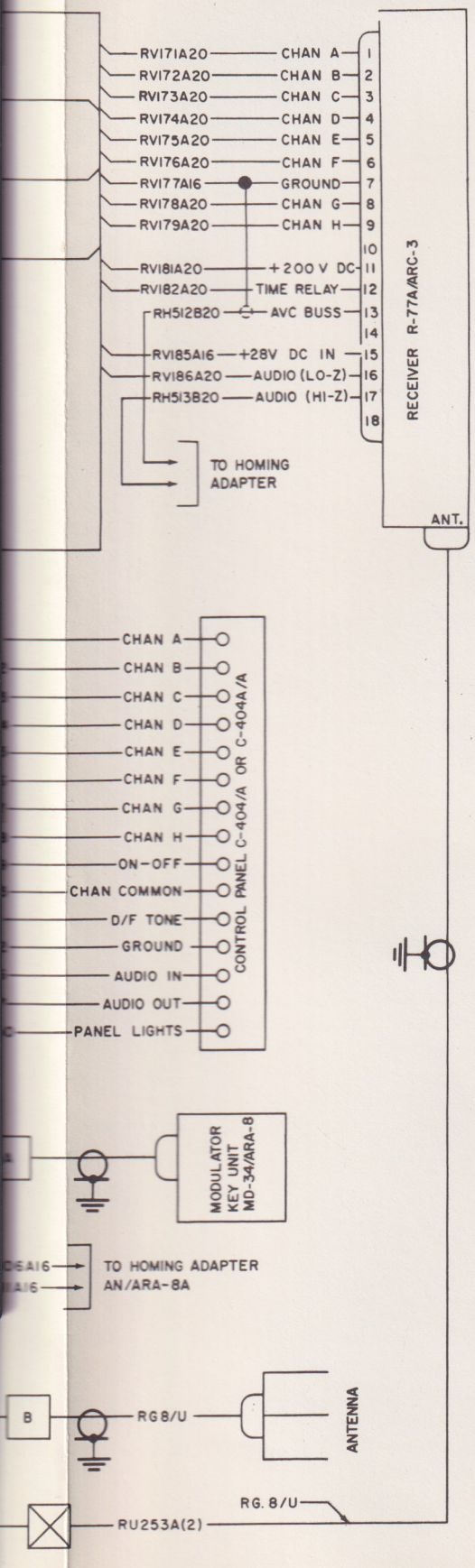

3.2.0-10-87

stem Intercabling

SECTION XIA

VHF COMMAND VHF-101

11A-1. DESCRIPTION AND LEADING PARTICULARS.

11A-2. This section comprises maintenance instructions for the VHF Command Set VHF-101 in HU-16B aircraft (see figure 11A-1). This set is airborne receiving and transmitting equipment designed to provide voice communication from aircraft to aircraft and aircraft to ground, as well as full air traffic control system functions. The frequency range is from 116.00 to 149.95 megacycles in 50 kilocycle steps, giving a total of 680 crystal controlled frequencies or channels. Remote operation of the set on any frequency channel is accomplished by selecting the desired channel on the control box. Principal components of the set are a transmitter, receiver, control box and antenna mast. Figure 11A-3 illustrates complete system data flow.

11A-3. TRANSMITTER 17L-7A/VHF-101. The transmitter operates on 680 preset channels with a minimum power output of 25 watts from 116.00 to 133.95 megacycles and a minimum of 20 watts from 134.00 to 149.95 megacycles. Channel selection is accomplished automatically by selecting desired frequency on remote control box.

11A-4. RECEIVER 51X-2B/VHF-101. VHF communication receiver 51X-2B is an airborne crystal control, double conversion, superheterodyne receiver that operates in the frequency range from 116.00 to 151.95 megacycles in 50 kilocycle steps, giving a total of 720 selectable channels for the receiver. The receiver and transmitter are both self contained with individual power supplies and are located at the navigator's station on the top shelf.

11A-5. RADIO SET CONTROL 614U-6/VHF-101. Radio set control 614U-6 provides remote control of the receiver and transmitter. The controls located on the control panel are the frequency selector, volume control, squelch control, power switch, and SCS-DCS/DCD switch. The control panel is mounted on the pilot's overhead console.

11A-6. ANTENNA MAST AN-104B. The antenna mast consists of a hardwood oval-shaped rib approximately 31 inches in length. The antenna element and transmission line are housed in a drilled cavity that extends up through the center. The antenna is located on top of the fuselage at station 332. (See figure 11-1.)

11A-7. OPERATIONAL CHECKOUT.

11A-8. OPERATIONAL CHECKOUT OF VHF-101.

a. Make sure aircraft is electrically grounded to an unpainted surface on either main landing gear or nose gear.

b. Connect electrical power source.

c. Place on-off switch on ON, allow 10 minutes for tubes in the equipment to warm up.

RESULT: Receiver output should be heard in the headset.

d. Rotate the squelch control from one extreme to the other.

RESULT: Distinct squelch action should be heard in the headset.

e. Rotate volume control from one extreme to the other.

RESULT: Audio level should increase and decrease accordingly.

f. Place SCS-DCS/DCD switch in SCS mode of operation. Press microphone button and speak into the microphone. Note meter indications on transmitter and compare with figure 11A-2.

RESULT: Speech (side tone) which modulates the transmitter should be heard in headset.

g. Establish radio communication with an aircraft in flight or with the control tower.

RESULTS: Transmission and reception of radio communication should be accomplished.

h. Rotate frequency control to several frequencies slow enough to allow channel selecting mechanism to operate.

RESULT: The receiver and transmitter should tune to each selected channel in approximately four seconds.

i. Place on-off switch to OFF.

j. Disconnect electrical power source.

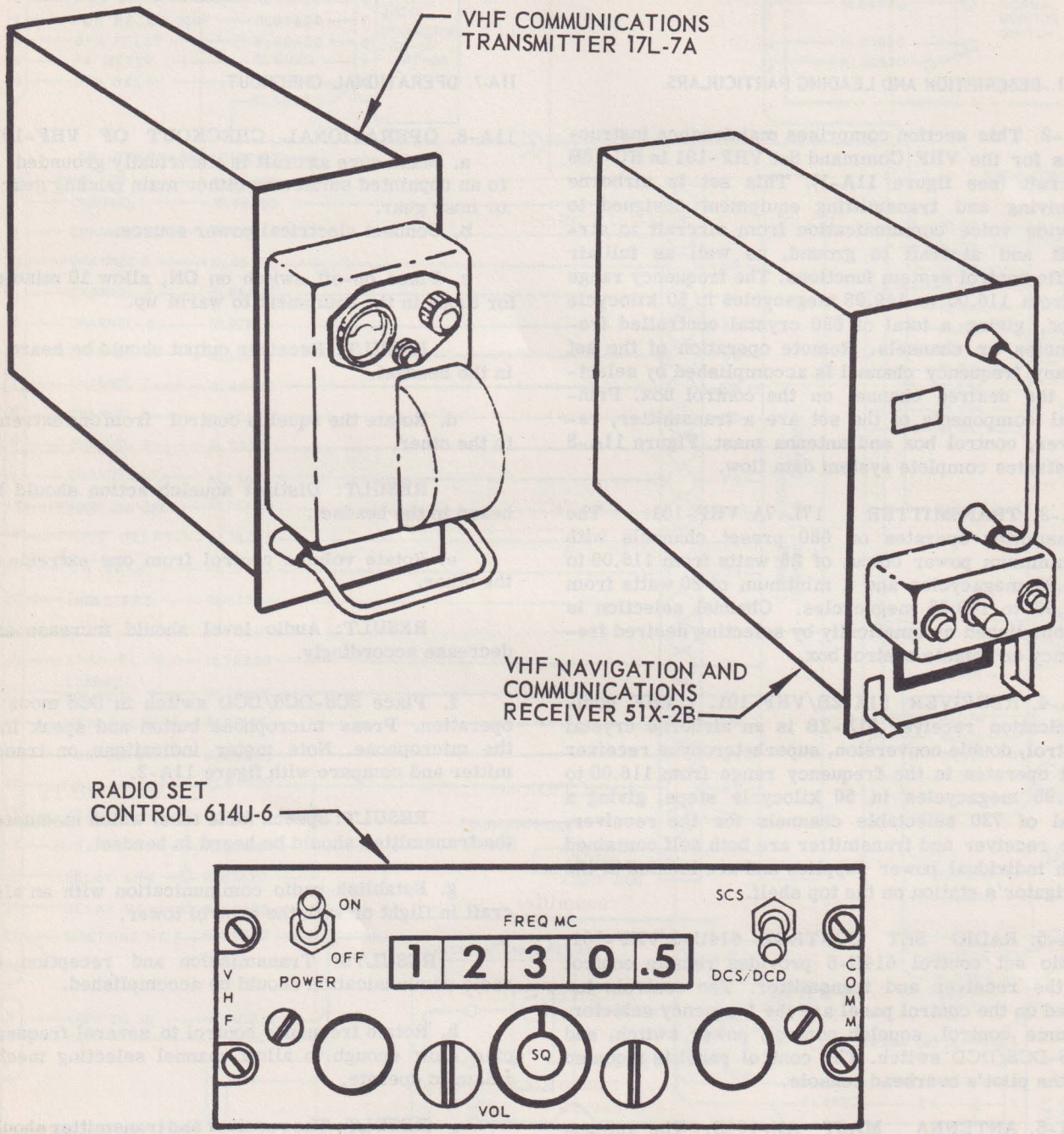

Figure 11A-1. VHF Command VHF-101.

CIRCUIT METER POSITION	METER INDICATION
Ant	3 - 6
PA-G	2 - 10
DR-G	0 - 8 (Approx 5)
MoD-E	6.5 - 7.5
Bat	6.5 - 7.5
Lv	6.5 - 7.5
Hv	6.5 - 7.5
PA-P	6.5 - 7.5

Figure 11A-2. Table of Typical Circuit Meter Indication.

11A-9. SYSTEM ANALYSIS.

TEST EQUIPMENT REQUIRED				
FIGURE & INDEX NUMBER	NAME	TYPE DESIGNATION	ALTERNATE	USE & APPLICATION
None	Multimeter	AN/PSM-6	Multimeter FSN 6625-649-4593	Trouble shooting VHF Command VHF-101

11A-10. Trouble Shooting VHF-101.

SYMPTOM	FUNCTIONAL LOOP	KEY TEST POINTS
Complete Set Inoperative.	Power	1, 2, 3
Incorrect frequency selection in transmitter for frequency selected on control panel.	Transmitter Control Panel	
Incorrect frequency selection on receiver for frequency selected on control panel.	Receiver Control Panel	
No reception or transmission.	Transmitter-Receiver Antenna	

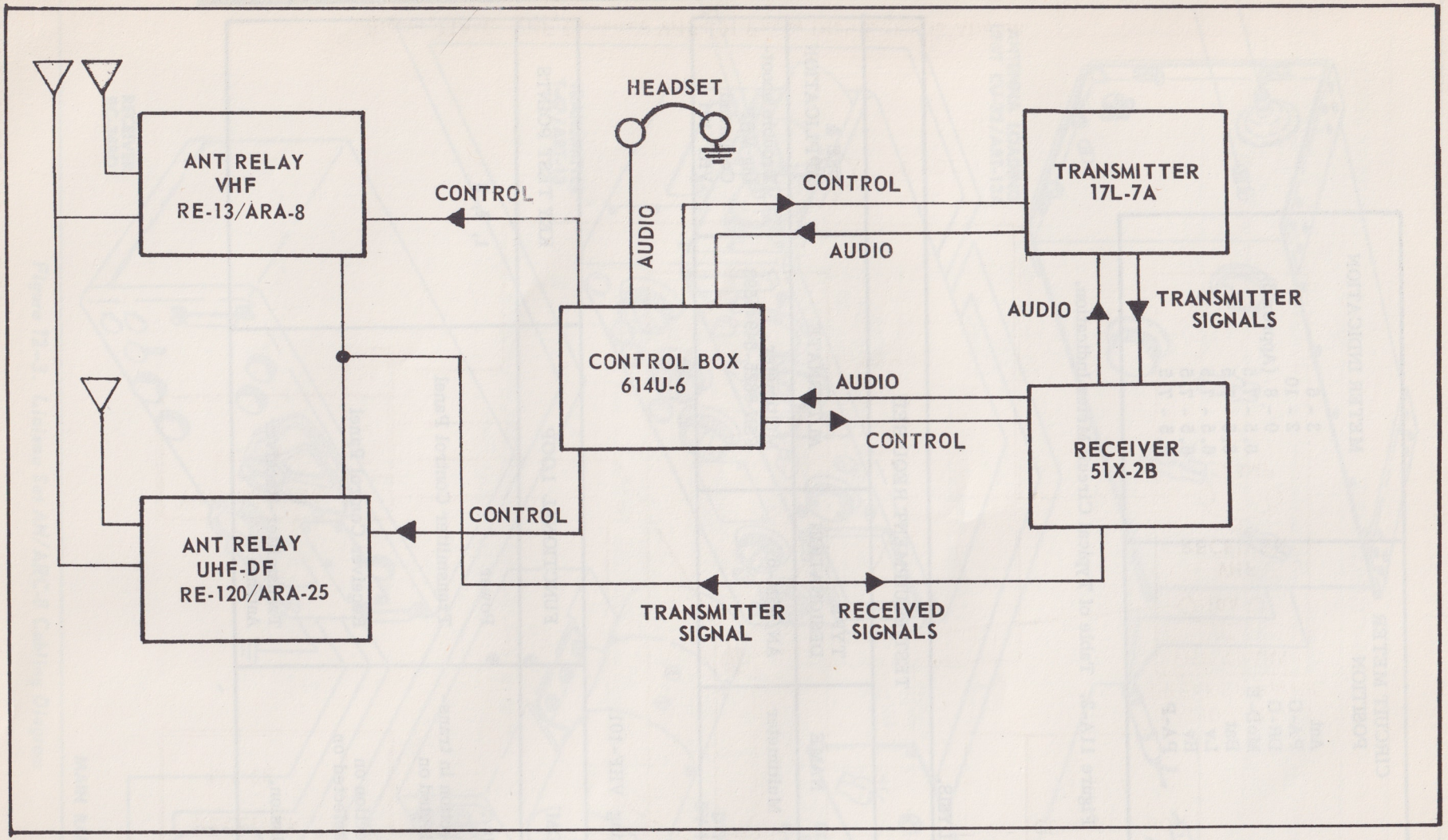

Figure 11A-3. VHF Command VHF-101 Complete Function Data Flow

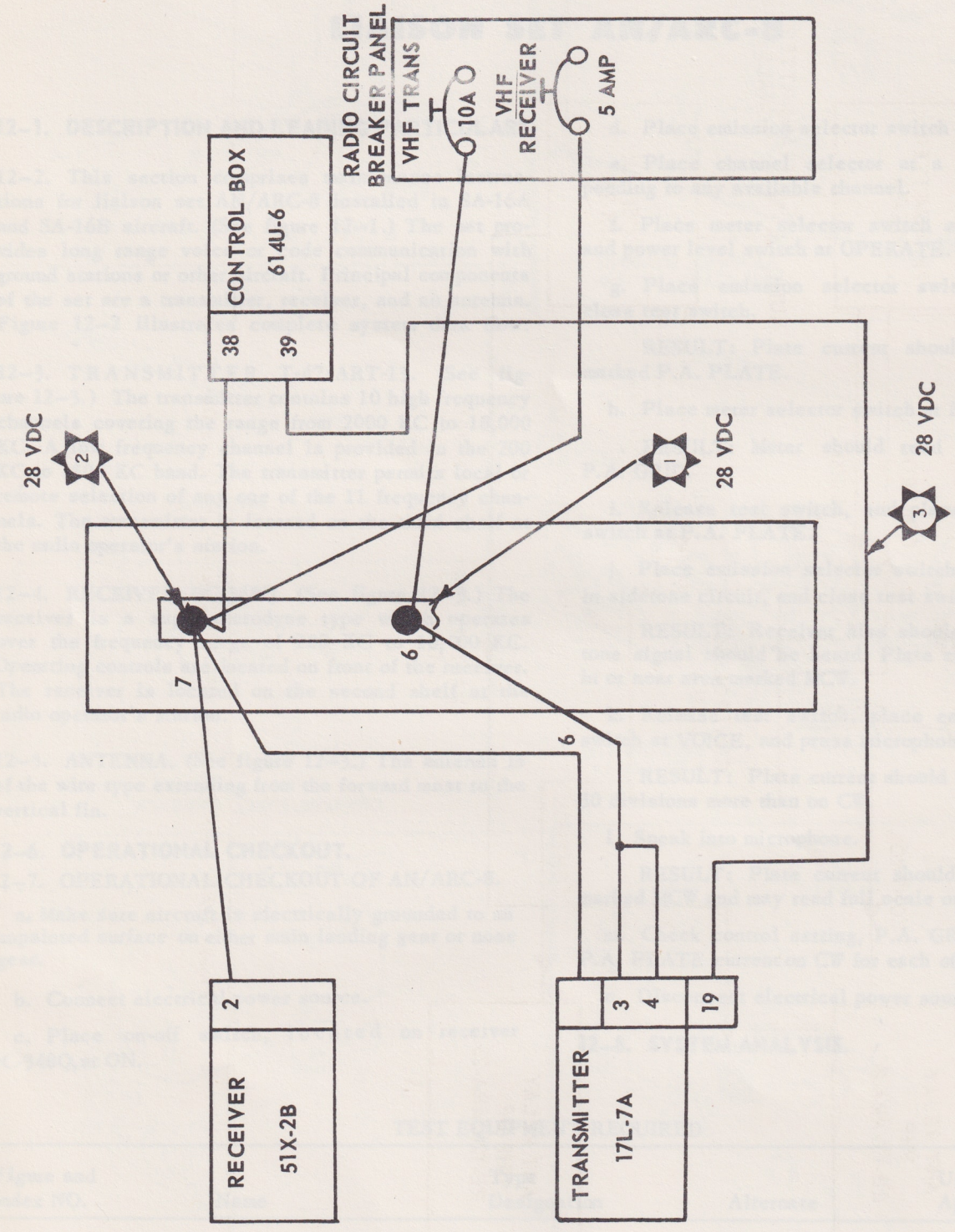

Figure 11A-4. VHF Command VHF-101 Power Distribution to Aircraft.

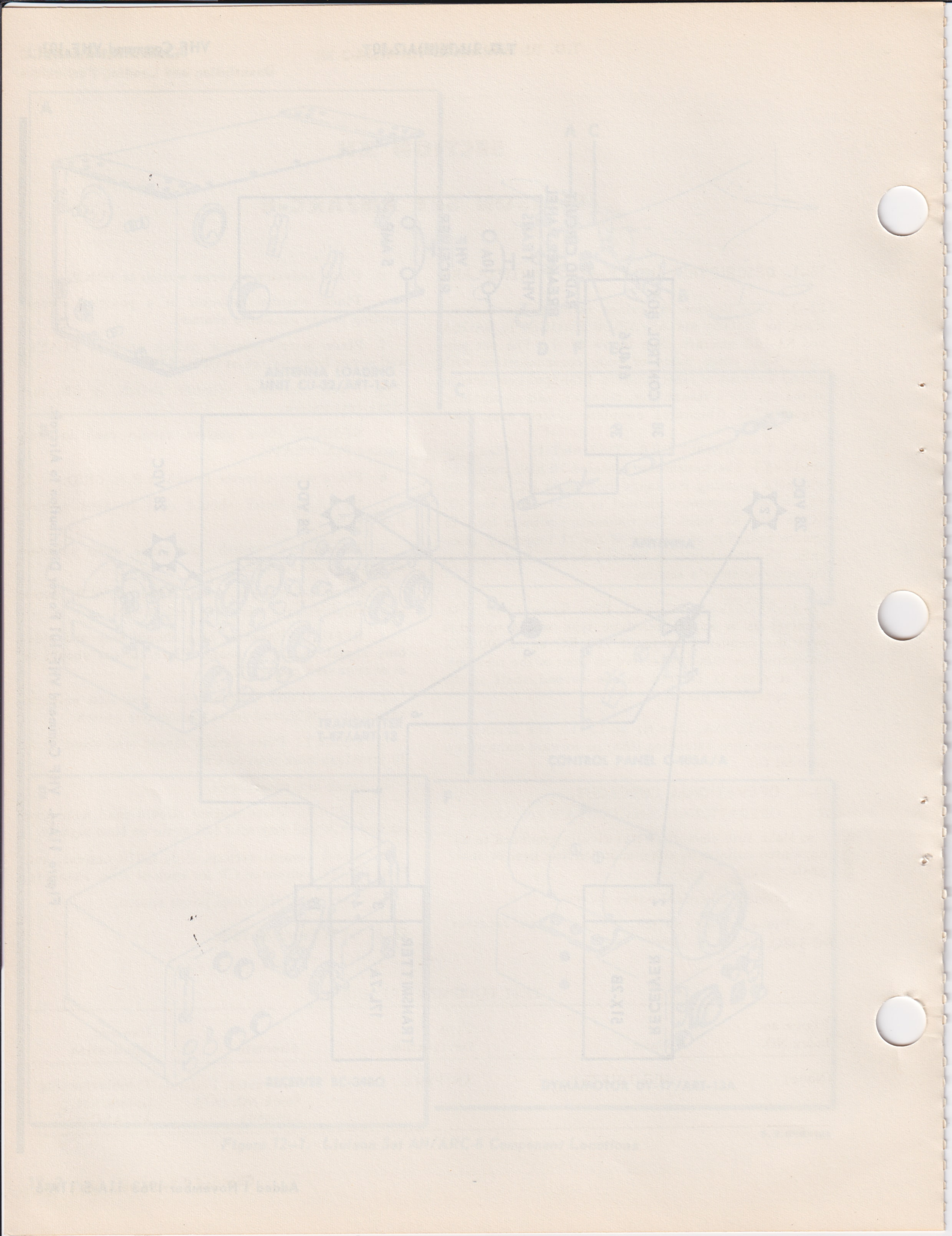

SECTION XII

LIAISON SET AN/ARC-8

12-1. DESCRIPTION AND LEADING PARTICULARS.

12-2. This section comprises maintenance instructions for liaison set AN/ARC-8 installed in SA-16A and SA-16B aircraft. (See figure 12-1.) The set provides long range voice or code communication with ground stations or other aircraft. Principal components of the set are a transmitter, receiver, and an antenna. Figure 12-2 illustrates complete system data flow.

12-3. TRANSMITTER T-47/ART-13. (See figure 12-3.) The transmitter contains 10 high frequency channels covering the range from 2000 KC to 18,000 KC. A low frequency channel is provided in the 200 KC to 1500 KC band. The transmitter permits local or remote selection of any one of the 11 frequency channels. The transmitter is located on the third shelf at the radio operator's station.

12-4. RECEIVER BC-348Q. (See figure 12-3.) The receiver is a superheterodyne type which operates over the frequency range of 200 KC to 18,000 KC. Operating controls are located on front of the receiver. The receiver is located on the second shelf at the radio operator's station.

12-5. ANTENNA. (See figure 12-3.) The antenna is of the wire type extending from the forward mast to the vertical fin.

12-6. OPERATIONAL CHECKOUT.

12-7. OPERATIONAL CHECKOUT OF AN/ARC-8.

a. Make sure aircraft is electrically grounded to an unpainted surface on either main landing gear or nose gear.

b. Connect electrical power source.

c. Place on-off switch, located on receiver BC-348Q, at ON.

d. Place emission selector switch at VOICE.

e. Place channel selector at a position corresponding to any available channel.

f. Place meter selector switch at P.A. PLATE, and power level switch at OPERATE.

g. Place emission selector switch at CW, and close test switch.

RESULT: Plate current should read in area marked P.A. PLATE.

h. Place meter selector switch at P.A. GRID.

RESULT: Meter should read in area marked P.A. GRID.

i. Release test switch, and place meter selector switch at P.A. PLATE.

j. Place emission selector switch at MCW, listen in sidetone circuit, and close test switch.

RESULT: Receiver hiss should stop and sidetone signal should be heard. Plate current should be in or near area marked MCW.

k. Release test switch, place emission selector switch at VOICE, and press microphone switch.

RESULT: Plate current should read about 20 or 30 divisions more than on CW.

l. Speak into microphone.

RESULT: Plate current should read near area marked MCW and may read full scale on load signals.

m. Check control setting, P.A. GRID current, and P.A. PLATE current on CW for each of other channels.

n. Disconnect electrical power source.

12-8. SYSTEM ANALYSIS.

TEST EQUIPMENT REQUIRED

Figure and Index NO.	Name	Type Designation	Alternate	Use and Application
(None)	MULTIMETER	AN/PSM-6	Multimeter, Federal-Stock NO. 6625-649-4593	Troubleshooting liaison set AN/ARC-8.

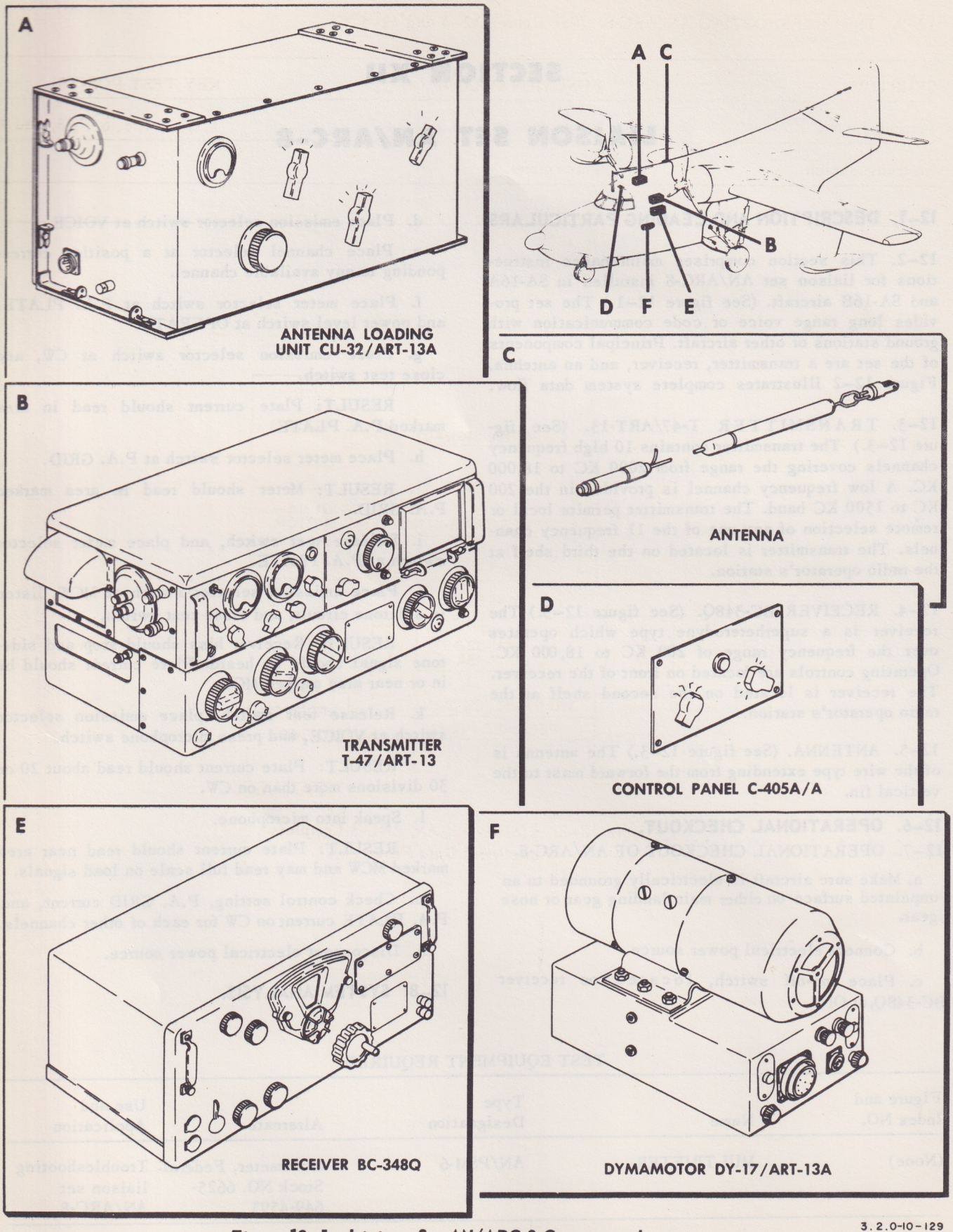

3.2.0-10-129

Figure 12–1. Liaison Set AN/ARC-8 Component Locations

12–9. TROUBLESHOOTING AN/ARC-8. (See figures 12–4 and 12–5.)

SYMPTOM	FUNCTIONAL LOOP	KEY TEST POINTS
Set inoperative.	Power.	1, 2, 3, 4, 5, 6, 7, 8, and 9.
No transmission.	Transmitter.	
No reception.	Receiver.	

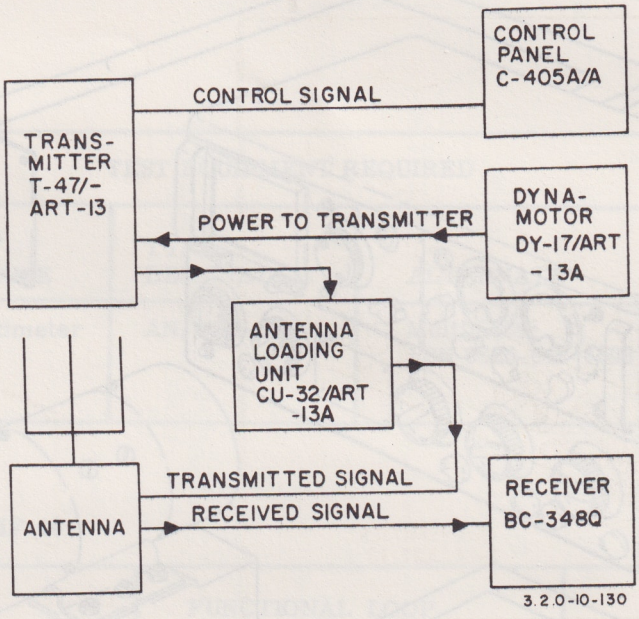

Figure 12–2. Liaison Set AN/ARC-8 Complete Functional Data Flow

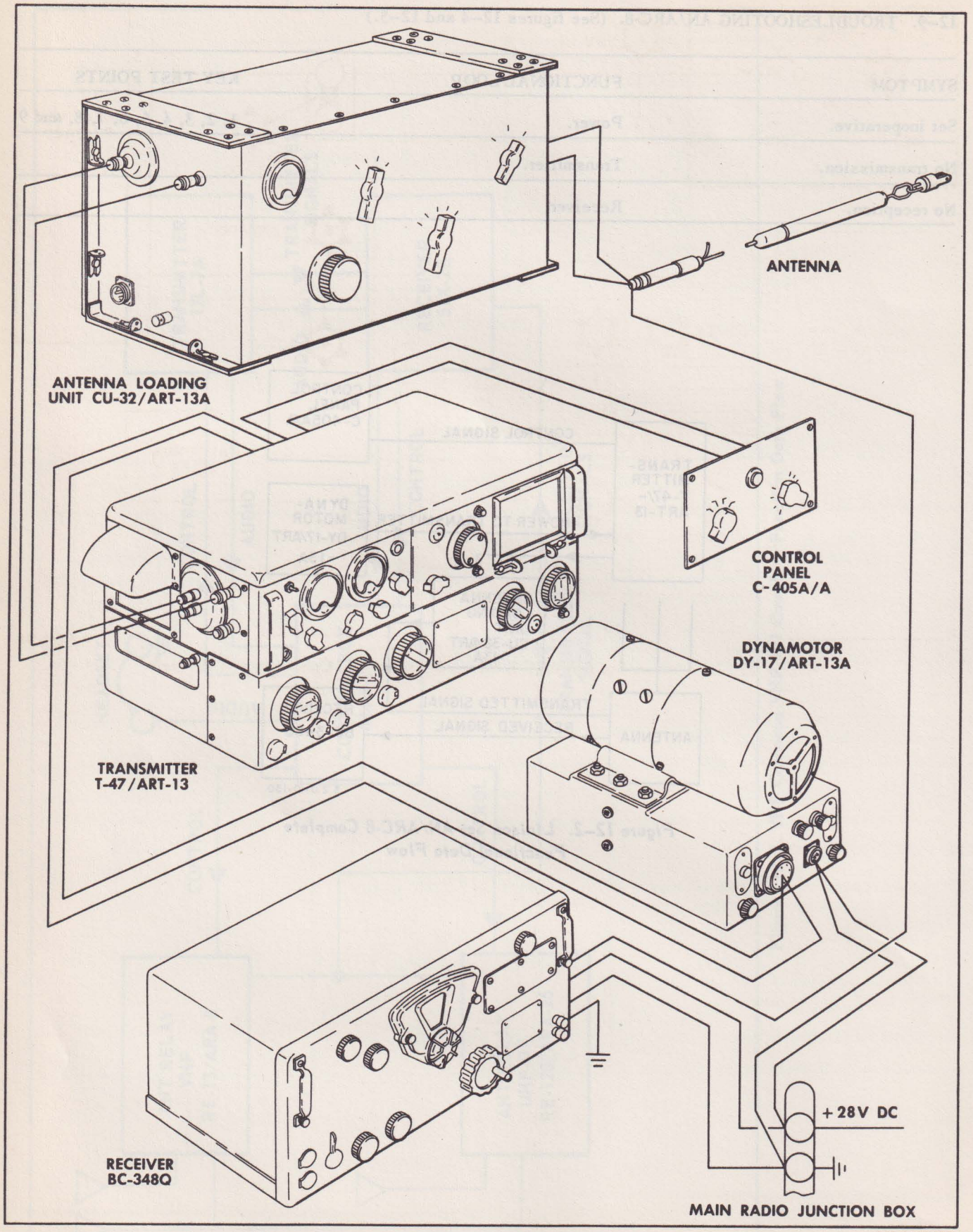

Figure 12–3. Liaison Set AN/ARC-8 Cabling Diagram

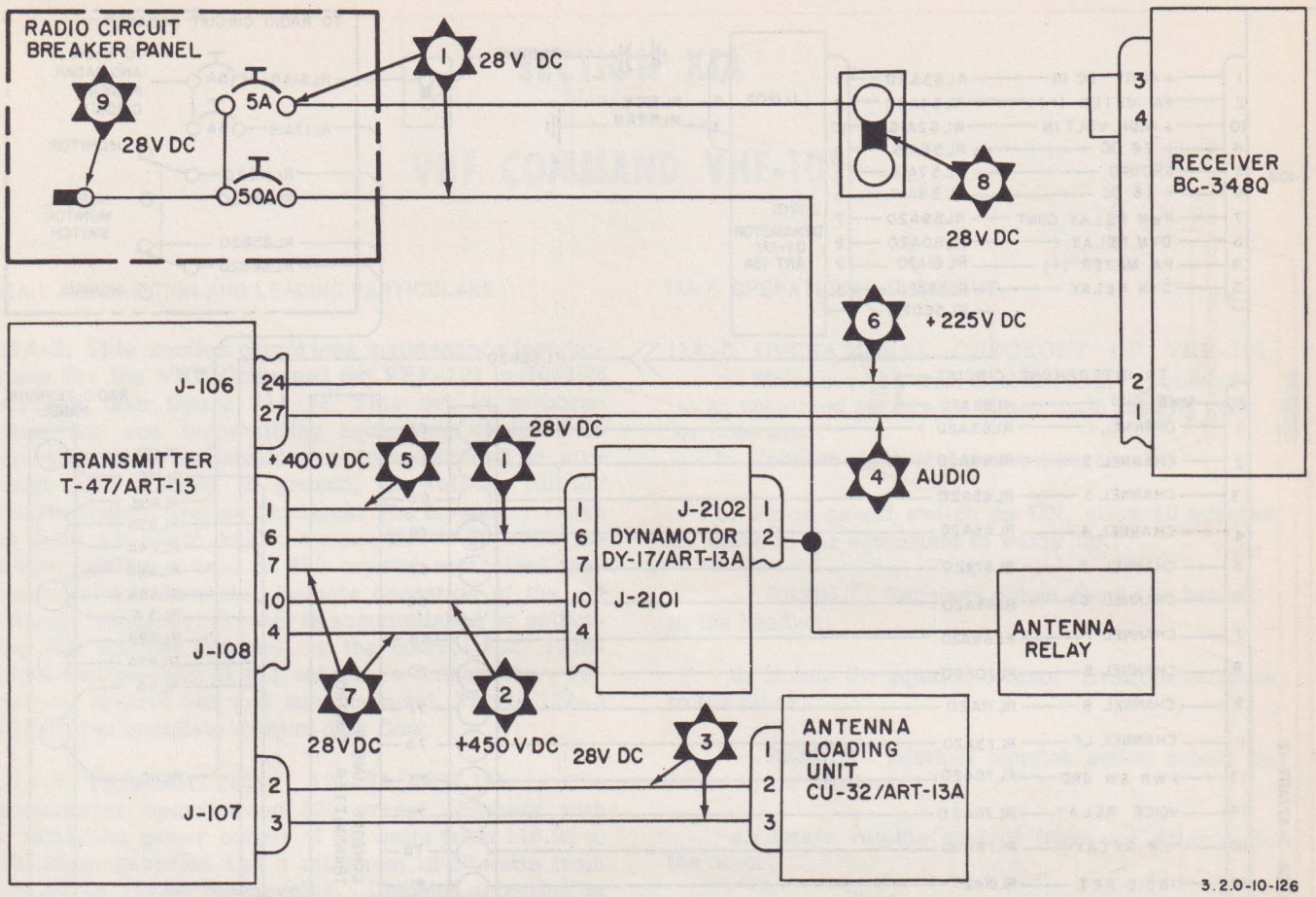

Figure 12–4. Liaison Set AN/ARC-8 Power Distribution, Connection to Aircraft

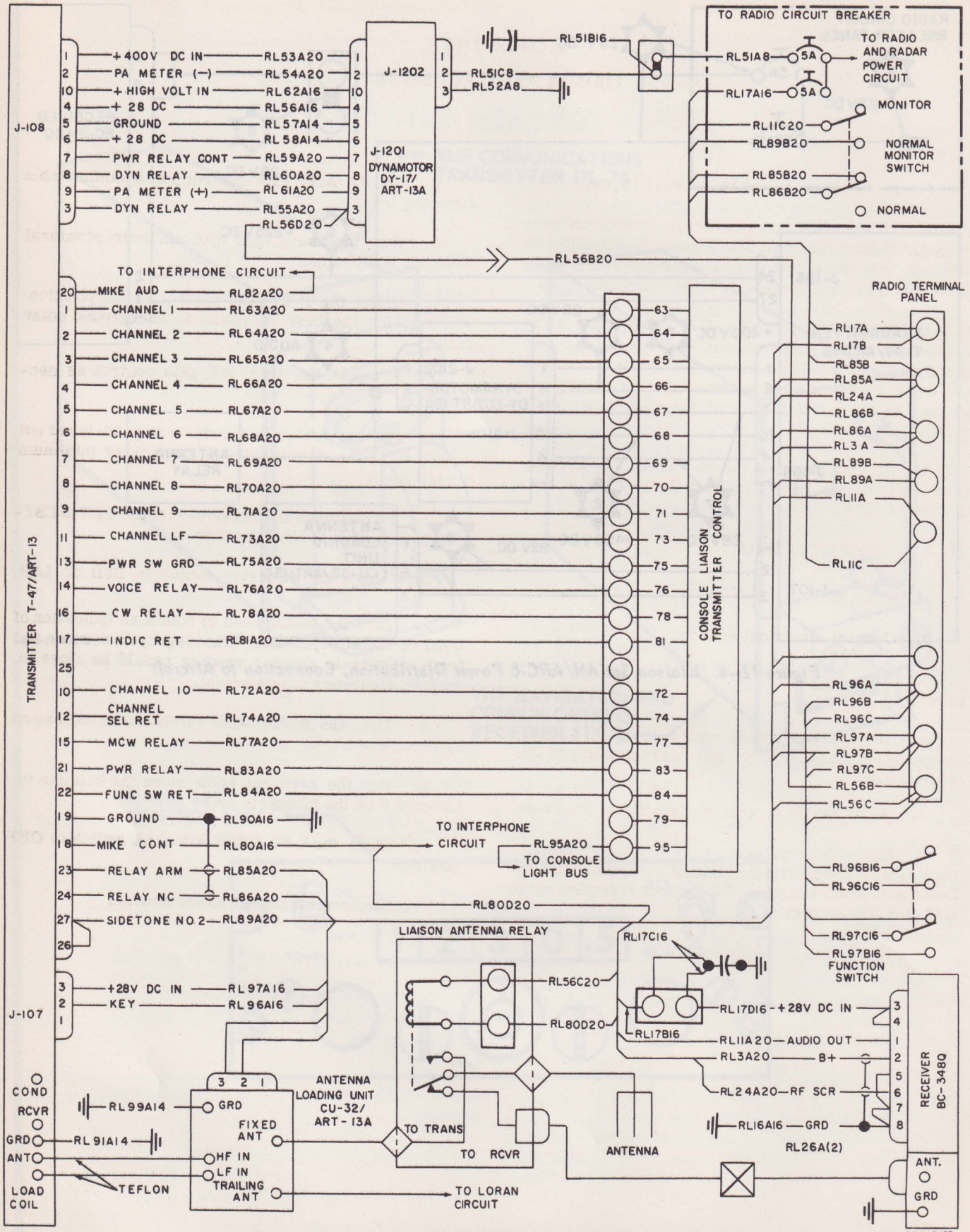

Figure 12-5. Liaison Set AN/ARC-8 System Intercabling

SECTION XIIA
LIAISON RECEIVER 51S-1B

12A-1. DESCRIPTION AND LEADING PARTICULARS.

12A-2. This section comprises maintenance instructions for liaison receiver 51S-1B installed in HU-16B aircraft. The receiver provides long range single sideband, amplitude modulation or code reception.

12A-3. RECEIVER 51S-1B. (See figure 12A-1.) The receiver is a dual conversion receiver which operates in the range of 0.2 to 30 megacycles. Operating controls are located on the front of the receiver. The receiver is located on the second shelf at the radio operator's station.

12A-4. ANTENNA. (See figure 12A-1). The antenna is of the wire type extending from the forward mast to the vertical fin.

12A-5. OPERATIONAL CHECK.

a. Make sure aircraft is electrically grounded.

b. Connect electrical source.

c. Turn the OFF-STBY-ON-CAL switch to ON position.

d. Turn the megacycle control to obtain an indication on the megacycle counter corresponding to the desired band.

e. Turn the R.F. gain control fully clockwise.

f. Move the emission switch to desired mode of reception; USB for upper sideband reception, LSB for lower sideband reception, CW for code reception and to A.M. for AM reception.

g. Set the A.F. gain control for a comfortable listening level.

h. Turn the tuning knob to obtain the most natural sounding audio output.

i. Adjust the R.F. gain control to the position which yields the best reception to background noise ratio.

j. Readjust the local AF gain control as necessary

k. An interfering hederodyne may be tuned out by adjusting the rejection tuning control for minimum interference.

l. To calibrate the receiver turn the OFF-STBY-ON-CAL switch to CAL position.

m. Move the emission switch to USB or LSB.

n. Turn the tuning knob to obtain an indication of 0 KC on the kilocycle dial. (The megacycle counter and tenth megacycle counter reading should be close to desired frequency of operation).

o. Turn the tuning knob to obtain an indication of zero beat.

p. Use the zero set knob, move the hairline to indicate 0 on the kilocycle dial.

q. Turn the OFF-STBY-ON-CAL switch to OFF position.

r. Remove electrical power source.

12A-6. SYSTEM ANALYSIS.

TEST EQUIPMENT REQUIRED

FIGURE & INDEX NO.	NAME	TYPE DESIGNATION	ALTERNATE	USE & APPLICATION
(None)	MULTIMETER	AN/PSM-6	Multimeter, FSN 6625-649-4593	Trouble shooting liaison receiver 51S-1B

12A-7 TROUBLESHOOTING 51S-1B. (See figures 12A-2 and 12A-3.)

SYMPTOM	FUNCTIONAL LOOP	KEY TEST POINTS
Set inoperative	Power	1, 2
Not reception	Receiver	

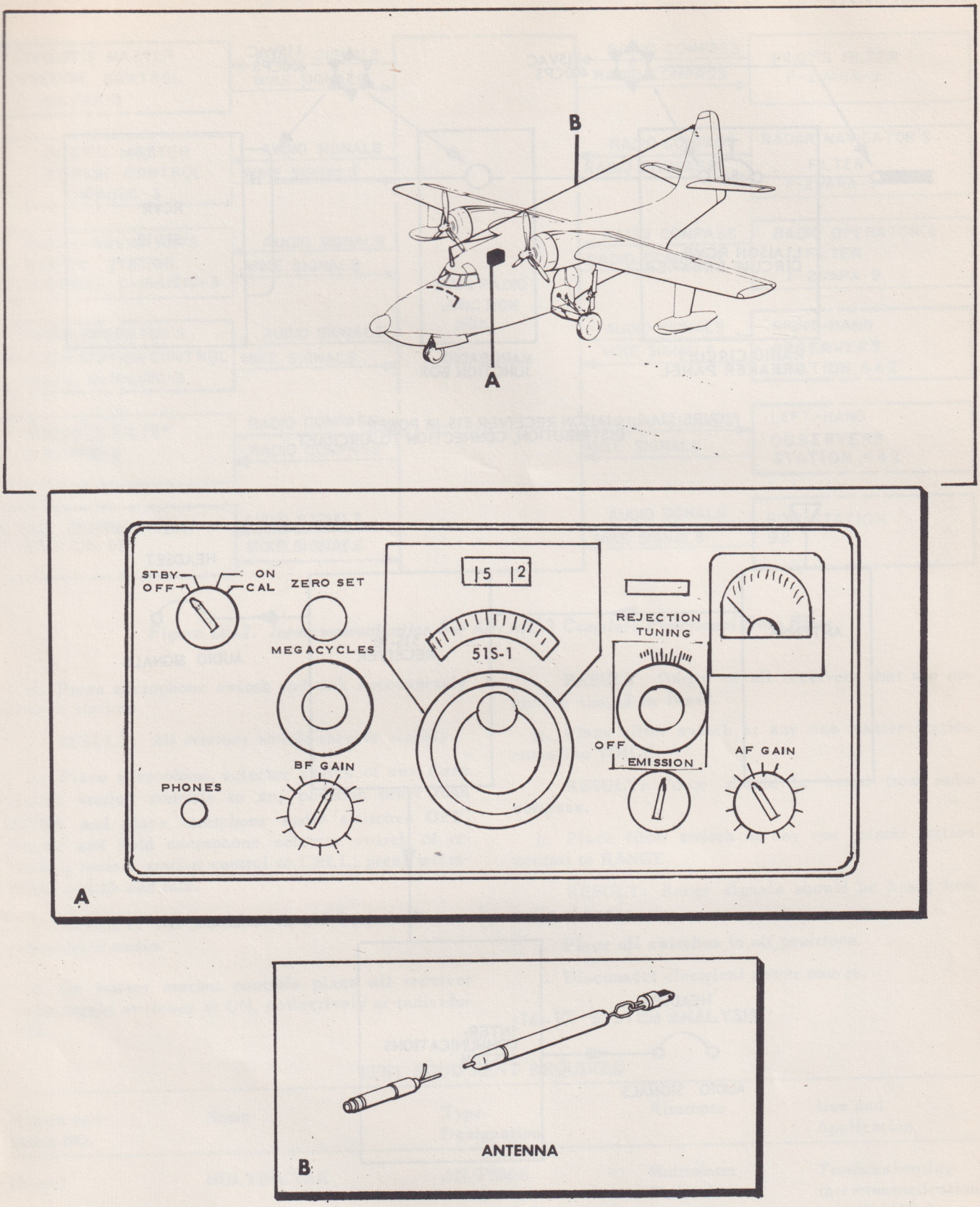

Figure 12A-1. Liaison Receiver 51S-1B Component Locations.

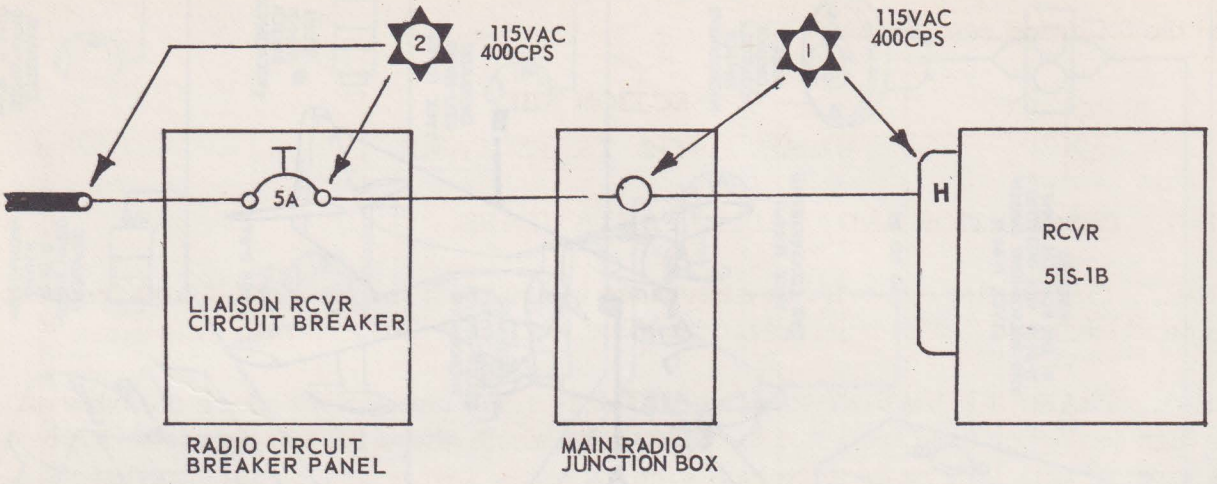

FIGURE 12A-2. LIAISON RECEIVER 51S-1B POWER DISTRIBUTION, CONNECTION TO AIRCRAFT.

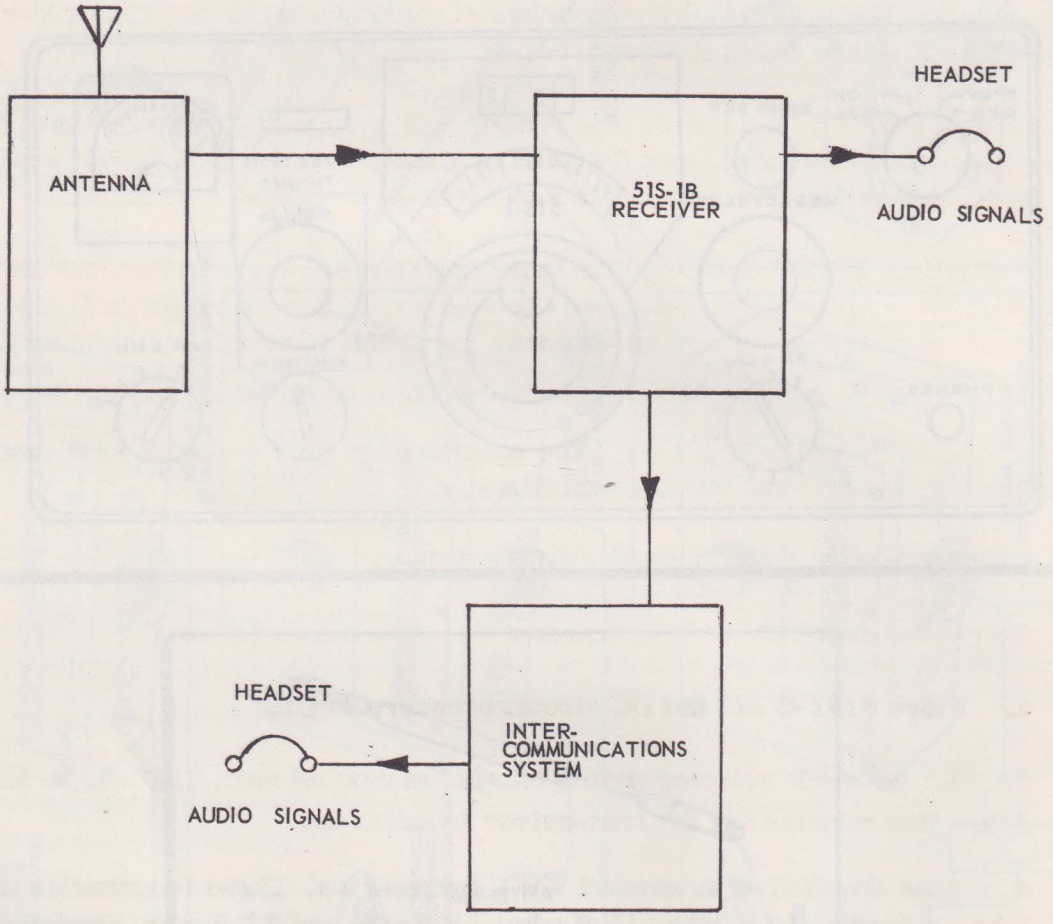

FIGURE 12A-3. LIAISON RECEIVER 51S-1B COMPLETE FUNCTIONAL DATA FLOW.

Add the following new section:

SECTION XIIB
HF SSB 618T-2 TRANSCEIVER

12B-1. DESCRIPTION AND LEADING PARTICULARS.

12B-2. This section comprises maintenance instructions for the 618T-2 high frequency single sideband (HF SSB) transceiver installed in the HU-16B Aircraft.

12B-3. TRANSCEIVER 618T-2. The 618T-2 is a SSB transceiver which operates on the high frequency band from 2.0 to 29.999 mhz which offers 28,000 channels. It provides the aircraft with long range communication on voice, CW or data communication (additional equipment not installed for data communication). The primary operation mode of the 618T-2 is SSB. The equipment can also operate on a compatible amplitude-modulated (AM) signal to provide communication with stations having only AM capability. The 618T-2 receives power from the main AC and DC bus. Circuit protection is provided by circuit breakers. The HF SSB system consists of the following units: Transceiver 618T-2, Control Unit 714E-3 and Antenna Tuner 180L-3.

12B-4. CONTROL PANEL 714E-3. The control unit provides direct reading digital frequency presentation which allows the pilot to quickly select any of 28,000 available channel frequencies. The control unit is located in the overhead console panel.

12B-5. ANTENNA TUNER 180L-3. The tuner contains servo controlled circuits which tune out inductive or capacitive reactance encountered in fixed wire aircraft antennas. The tuner unit requires no manual adjustments for initial installation, frequency change or change of antenna.

12B-6. ANTENNA (clothes line type). The antenna is of the fixed wire type extending from the forward mast to the vertical stabilizer.

12B-7. OPERATIONAL CHECK (SEE FIGURE 12B-1).

12B-8. To ground check the 618T-2 transceiver, proceed as follows:

a. Place 618T-2 AC and DC circuit breakers to ON.

b. Set the mode selector switch located on control unit, 714E-3, to AM. Allow five minutes for the transceiver to warm up.

c. Tune the 618T-2 to several WWV frequencies. These frequencies are 2.5 mhz, 5.0 mhz, 10.0 mhz, 15.0 mhz, 20.0 mhz and 25.0 mhz. Perform an approximate frequency check on the 618T-2 by listening to WWV with mode selector switch in the USB, LSB and AM position during an announcement interval. The voice quality should be good in all three modes.

d. Set the meter selector switch on the front panel to 130V. The meter should indicate in the red area.

e. Set the meter selector switch to 28V. The meter should indicate in the red area.

f. Select a frequency on which the transmitter may be keyed.

g. Set the meter selector switch to 1500V. When the transmitter is not keyed, the meter indicator should be zero. Key the transmitter. The meter should indicate in the red area.

NOTE

With transceiver in USB or LSB mode, the meter may indicate slightly above the red area because PA plate current is at static level.

h. Set the meter selector switch to PA MA. When the transmitter is not keyed, the meter indication should be zero. Disconnect the coaxial jumper from the 500 KC STD jack on the right front panel of the 618T-2. Key the transmitter. The meter should indicate approximately 300 MA. Unkey and replace the coaxial jumper. Again key the transmitter. The meter should indicate in the red area. Speak into the microphone. The meter indication may vary slightly.

i. Set the mode selector switch on the control unit to LSB. When the front panel switch is set to PA MA and transmitter is keyed but not modulated, the meter indication should be approximately 300 MA. Speak into the microphone. The indication on audio peaks should be approximately 500 MA. Check that side tone is present.

j. Set the mode selector switch on the control unit to USB. Repeat the procedure given in step i.

k. Set the mode selector switch on the control unit to "off" to remove power from the 618T-2.

12B-9. SYSTEM ANALYSIS.

Test Equipment Required

Figure and Index	Name	Type Designation	Alternate	Use and Application
(none)	Multimeter	AN/PSM-6	FSN 6625-649-4593	Trouble Shooting HF SSB Transceiver

Add the following new section:

SECTION XIIB

HF SSB 618T-2 TRANSCEIVER

12B-1. DESCRIPTION AND LEADING PARTICULARS.

12B-2. This section comprises maintenance instructions for the 618T-2 high frequency single sideband (HF SSB) transceiver installed in the HU-16B Aircraft.

12B-3. TRANSCEIVER 618T-2. The 618T-2 is a SSB transceiver which operates on the high frequency band from 2.0 to 29.999 mhz which offers 28,000 channels. It provides the aircraft with long range communication on voice, CW or data communication (additional equipment not installed for data communication). The primary operation mode of the 618T-2 is SSB. The equipment can also operate on a compatible amplitude-modulated (AM) signal to provide communication with stations having only AM capability. The 618T-2 receives power from the main AC and DC bus. Circuit protection is provided by circuit breakers. The HF SSB system consists of the following units: Transceiver 618T-2, Control Unit 714E-3 and Antenna Tuner 180L-3.

12B-4. CONTROL PANEL 714E-3. The control unit provides direct reading digital frequency presentation which allows the pilot to quickly select any of 28,000 available channel frequencies. The control unit is located in the overhead console panel.

12B-5. ANTENNA TUNER 180L-3. The tuner contains servo controlled circuits which tune out inductive or capacitive reactance encountered in fixed wire aircraft antennas. The tuner unit requires no manual adjustments for initial installation, frequency change or change of antenna.

12B-6. ANTENNA (clothes line type). The antenna is of the fixed wire type extending from the forward mast to the vertical stabilizer.

12B-7. OPERATIONAL CHECK (SEE FIGURE 12B-1).

12B-8. To ground check the 618T-2 transceiver, proceed as follows:

a. Place 618T-2 AC and DC circuit breakers to ON.

b. Set the mode selector switch located on control unit, 714E-3, to AM. Allow five minutes for the transceiver to warm up.

c. Tune the 618T-2 to several WWV frequencies. These frequencies are 2.5 mhz, 5.0 mhz, 10.0 mhz, 15.0 mhz, 20.0 mhz and 25.0 mhz. Perform an approximate frequency check on the 618T-2 by listening to WWV with mode selector switch in the USB, LSB and AM position during an announcement interval. The voice quality should be good in all three modes.

d. Set the meter selector switch on the front panel to 130V. The meter should indicate in the red area.

e. Set the meter selector switch to 28V. The meter should indicate in the red area.

f. Select a frequency on which the transmitter may be keyed.

g. Set the meter selector switch to 1500V. When the transmitter is not keyed, the meter indicator should be zero. Key the transmitter. The meter should indicate in the red area.

NOTE

With transceiver in USB or LSB mode, the meter may indicate slightly above the red area because PA plate current is at static level.

h. Set the meter selector switch to PA MA. When the transmitter is not keyed, the meter indication should be zero. Disconnect the coaxial jumper from the 500 KC STD jack on the right front panel of the 618T-2. Key the transmitter. The meter should indicate approximately 300 MA. Unkey and replace the coaxial jumper. Again key the transmitter. The meter should indicate in the red area. Speak into the microphone. The meter indication may vary slightly.

i. Set the mode selector switch on the control unit to LSB. When the front panel switch is set to PA MA and transmitter is keyed but not modulated, the meter indication should be approximately 300 MA. Speak into the microphone. The indication on audio peaks should be approximately 500 MA. Check that side tone is present.

j. Set the mode selector switch on the control unit to USB. Repeat the procedure given in step i.

k. Set the mode selector switch on the control unit to "off" to remove power from the 618T-2.

12B-9. SYSTEM ANALYSIS.

Test Equipment Required

Figure and Index	Name	Type Designation	Alternate	Use and Application
(none)	Multimeter	AN/PSM-6	FSN 6625-649-4593	Trouble Shooting HF SSB Transceiver

12B-10. TROUBLESHOOTING 618T-2 (See Figure 12B-1).

TROUBLE	PROBABLE CAUSE	REMEDY
No sidetone signals heard in headset-microphones	Defective sidetone amplifier in transceiver	Replace 618T-2 transceiver
	Defective head-set microphone or interphone intercommunication control unit	Replace headset-microphone or interphone intercommunication control unit as necessary
Transmitter cannot be keyed	Mode control switch on intercommunication control unit not positioned on HF	Rotate mode control switch on interphone control unit to HF
	Defective control unit	Replace SSB control unit 714E-3
	Defective relay in transceiver	Replace transceiver unit 618T-2
Transmitter can be keyed but not modulated	Defective transceiver audio input circuits	Replace transceiver unit 618T-2
Weak or no communication signal heard in headset-microphone	Defective intercommunication control unit	Replace interphone control unit
	Defective antenna	Replace broken insulators or lead-in cable. Check and repair poor connections
No increase in signal strength when RF SENS control on SSB control unit is advanced	Defective control unit	Replace SSB control unit 714E-3
	Defective transceiver	Replace transceiver unit 618T-2
Weak reception on all WWV frequencies	Defective transceiver unit	Replace transceiver unit 618T-2
	Defective antenna system	Check antenna system for poor connections, broken insulators and repair or replace as necessary

Figure 12B-1. 618T-2 SSB Communication Set Troubleshooting Chart

12B-10. TROUBLESHOOTING 618T-2 (See Figure 12B-1).

TROUBLE	PROBABLE CAUSE	REMEDY
No sidetone signals heard in headset-microphones	Defective sidetone amplifier in transceiver	Replace 618T-2 transceiver
	Defective head-set microphone or interphone intercommunication control unit	Replace headset-microphone or interphone intercommunication control unit as necessary
Transmitter cannot be keyed	Mode control switch on intercommunication control unit not positioned on HF	Rotate mode control switch on interphone control unit to HF
	Defective control unit	Replace SSB control unit 714E-3
	Defective relay in transceiver	Replace transceiver unit 618T-2
Transmitter can be keyed but not modulated	Defective transceiver audio input circuits	Replace transceiver unit 618T-2
Weak or no communication signal heard in headset-microphone	Defective intercommunication control unit	Replace interphone control unit
	Defective antenna	Replace broken insulators or lead-in cable. Check and repair poor connections
No increase in signal strength when RF SENS control on SSB control unit is advanced	Defective control unit	Replace SSB control unit 714E-3
	Defective transceiver	Replace transceiver unit 618T-2
Weak reception on all WWV frequencies	Defective transceiver unit	Replace transceiver unit 618T-2
	Defective antenna system	Check antenna system for poor connections, broken insulators and repair or replace as necessary

Figure 12B-1. 618T-2 SSB Communication Set Troubleshooting Chart

SECTION XIII

UHF COMMAND AN/ARC-27

13–1. DESCRIPTION AND LEADING PARTICULARS.

13–2. This section comprises maintenance instructions for UHF Command AN/ARC-27, installed in SA-16A and SA-16B aircraft. (See figure 13–1.) The set provides two-way, voice amplitude-modulated, radio-telephone, air-to-air and air-to-ground communication, and operates in conjunction with the direction finder group AN/ARA-25 as an aid to navigation. The set is capable of sending and receiving on 1750 channels, spaced 100 KC apart, in the 225.0 to 399.9 MC band. One fixed frequency, in the 238.0 to 248.0 MC band, can be continuously monitored. The set provides 18 preset channels for radio sending and receiving. The transmitter can be tone modulated with a 1020 CPS continuous tone signal generated within the equipment for emergency or direction finding purposes. The set utilizes a single antenna for transmitting and receiving. When used as a navigational aid in conjunction with the direction finder group, the receiver detects signals received by a directional antenna, and modifies these signals for use in the direction finder group. A remote control is used for remote selection of any one of the preset frequency channels. The principal components of the set are a receiver-transmitter, master set control, remote set control, and an antenna. Figure 13–2 illustrates complete system data flow.

13–3. RECEIVER-TRANSMITTER RT-178/ARC-27. (See figure 13–3.) The receiver-transmitter provides transmission and reception of continuous wave (CW) or voice communication. Two receivers are contained in the component, a main receiver and a guard receiver. These receivers operate independently of each other except for a common audio output circuit. The main receiver is a triple-conversion superheterodyne, using three crystal oscillators, with automatic crystal selection, to determine the heterodyne frequency. The guard receiver is an adjustable frequency receiver utilizing a dual-conversion superheterodyne circuit. The two receivers are contained in 10 plug-in type subassemblies. Minimum power output is nine watts for any one channel and approximately 16 watts average through the entire frequency range. Excitation for the transmitter is obtained from crystal-controlled oscillators. High voltage for the receiver-transmitter is received from a dynamotor, located inside the receiver-transmitter. The receiver-transmitter is located at the radar-navigator's station on the top shelf.

13-4. RADIO SET CONTROL C-1904/ARC-27. (See figure 13-1.) The C-1904/ARC-27 is a master control located remote from the receiver-transmitter. The control provides function selection, manual frequency selection for any one of 1750 frequency channels, volume control, 20 preset frequency channels and controls the direction finder AN/ARA-25.

13–5. Deleted.

13–6. ANTENNA SP-9002. (See figure 13–3.) A broad-band type, quarter-wave stud antenna is used for transmitting and receiving. The antenna is connected to the receiver-transmitter by a coaxial cable through a solenoid relay that engages a directional antenna when the radio set is being used as an aid for navigation. The antenna is located at the top of the vertical fin.

13–7. OPERATIONAL CHECKOUT.

13–8. OPERATIONAL CHECKOUT OF AN/ARC-27.

a. Make sure aircraft is electrically grounded to an unpainted surface on either main landing gear or nose gear.

b. Connect electrical power source.

c. Place radar-navigator's master control audio and microphone switches at UHF COMM.

d. Place function switch located on radio set control to R/R+G.

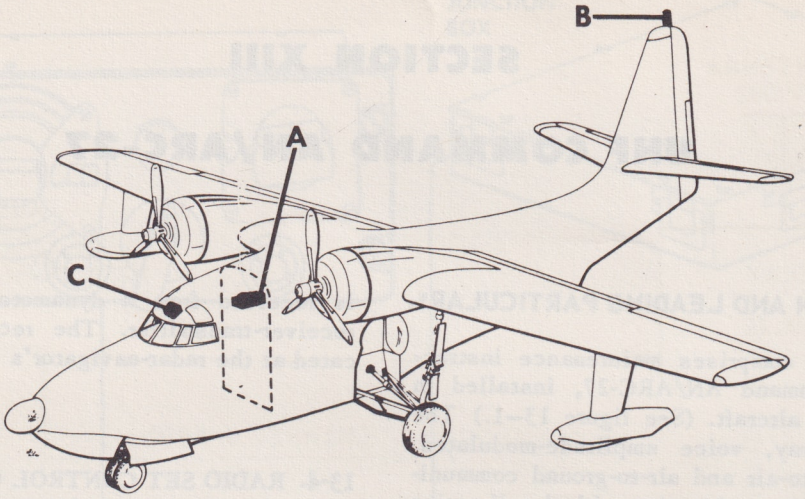

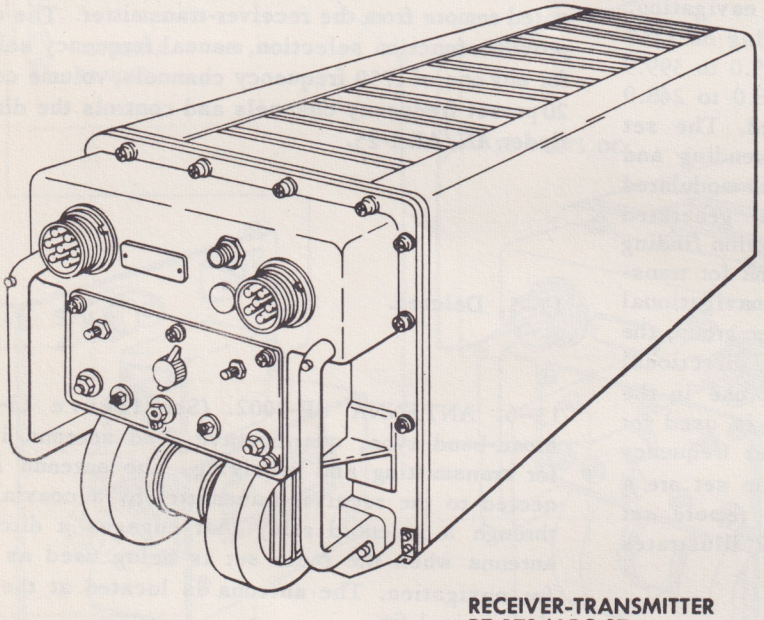

RECEIVER-TRANSMITTER
RT-178/ARC-27

A

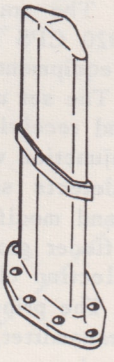

ANTENNA
SP-9002

B

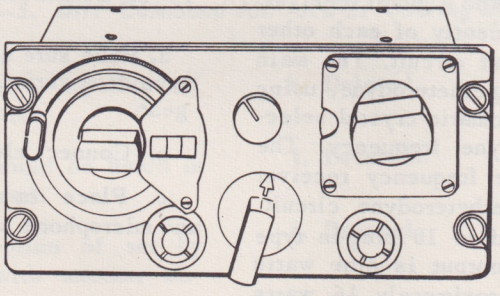

RADIO SET CONTROL C-1904/ARC-27

C

3.2.0-10-49

Figure 13–1. UHF Command AN/ARC-27 Component Locations

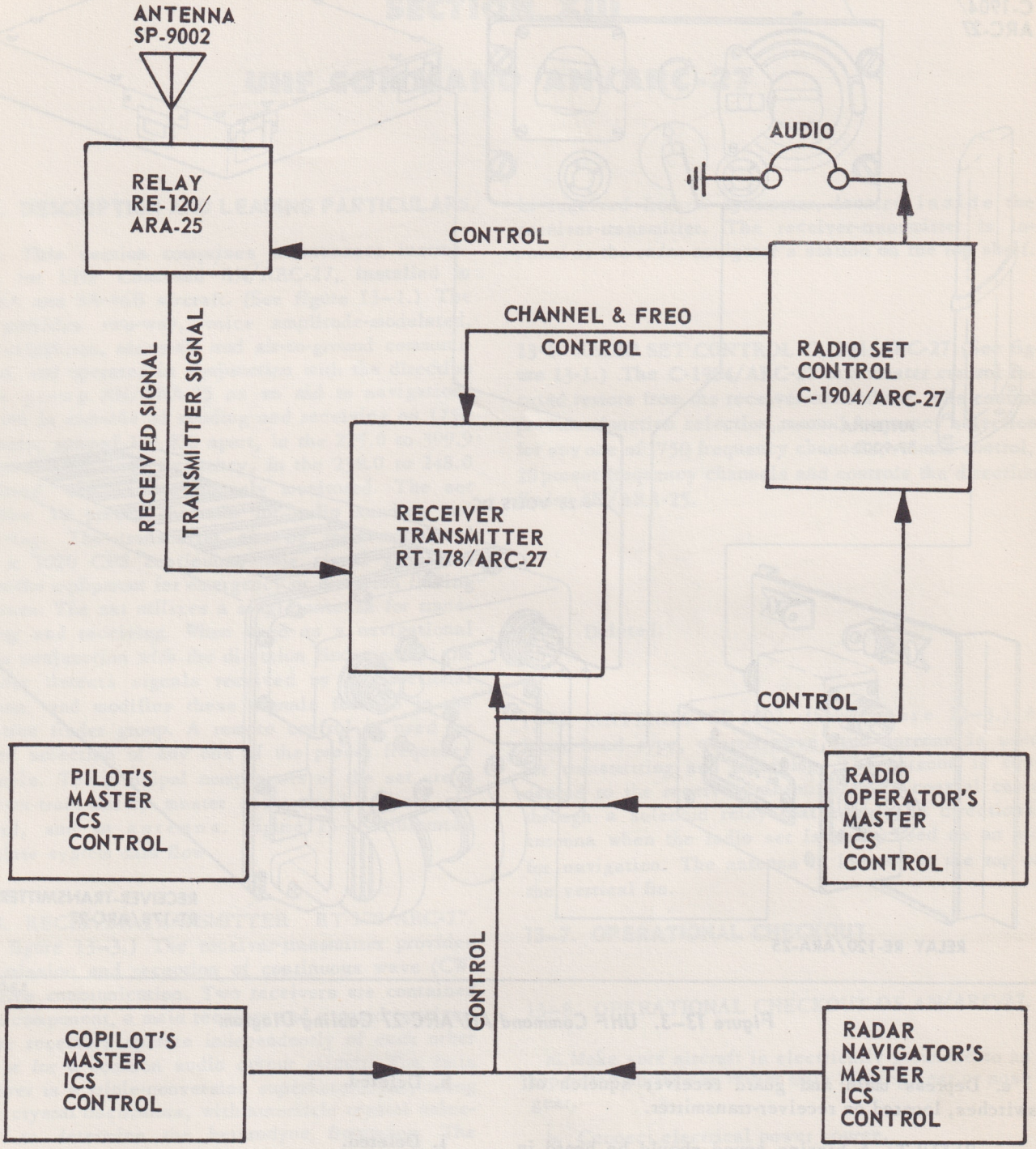

Figure 13-2. UHF Command AN/ARC-27 Complete Functional Data Flow.

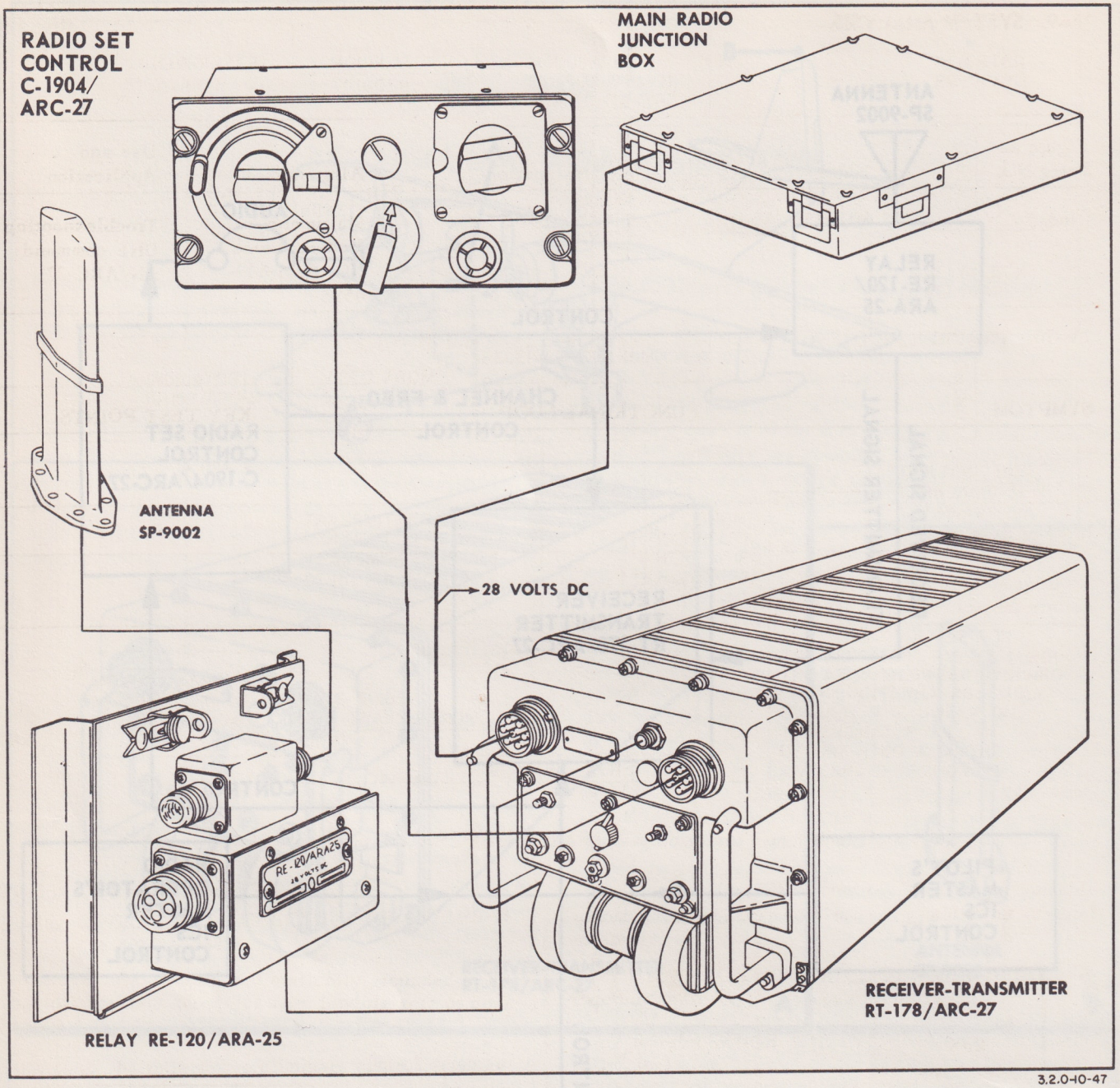

Figure 13–3. UHF Command AN/ARC-27 Cabling Diagram

e. Depress main and guard receiver squelch off switches, located on receiver-transmitter.

RESULT: A hissing sound should be heard in headset when either switch is depressed.

f. Check transmission and reception of set by establishing voice communication with another aircraft or ground station.

g. Deleted.

h. Deleted.

i. Deleted.

j. Deleted.

k. Place function switch on master set control to OFF.

l. Disconnect electrical power source.

13–9. SYSTEM ANALYSIS.

TEST EQUIPMENT REQUIRED

Figure and Index NO.	Name	Type Designation	Alternate	Use and Application
(None)	MULTIMETER	AN/PSM-6	Multimeter, Federal Stock NO. 6625-649-4593	Troubleshooting UHF command AN/ARC-27.

13–10. TROUBLESHOOTING AN/ARC-27. (See figures 13–4 and 13–5.)

SYMPTOM	FUNCTIONAL LOOP	KEY TEST POINTS
No audio output on receiver and no sidetone on transmitter.	Receiver-transmitter.	1 and 2
Howl or distorted signals.	Receiver-transmitter.	
No transmission or reception on certain frequencies.	Receiver-transmitter.	

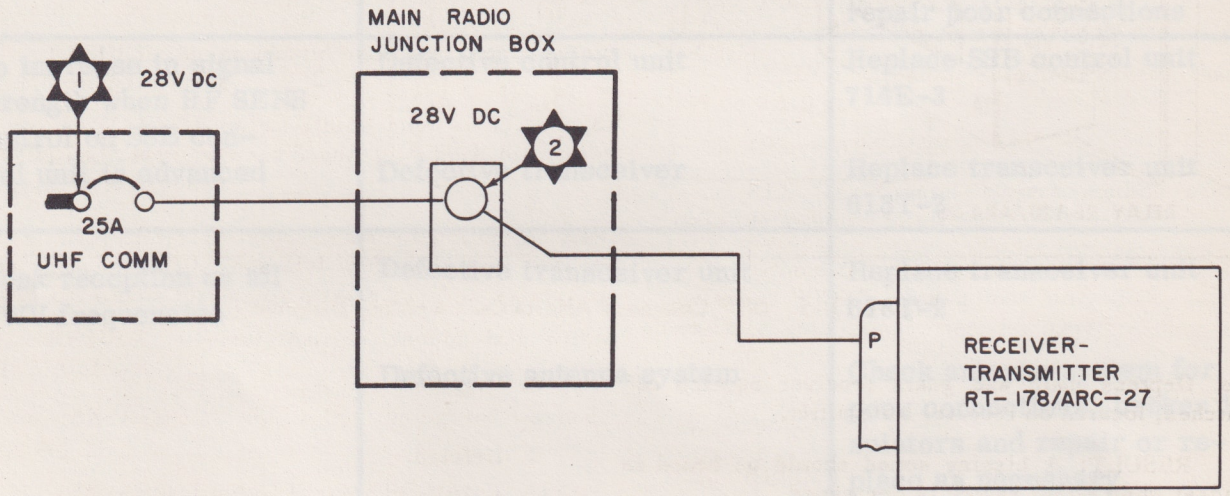

Figure 13–4. UHF Command AN/ARC-27 Power Distribution, Connection to Aircraft

All data on page 13-6, figure 13-5, deleted.

SECTION XIV

INTERCOMMUNICATION SET AN/AIC-3

14–1. DESCRIPTION AND LEADING PARTICULARS.

14–2. This section comprises maintenance instructions for intercommunication set AN/AIC-3, installed in SA-16A and SA-16B aircraft. (See figure 14–1.) The set provides intercommunication facilities within the aircraft between all crew member stations. Voice communication outside the aircraft is accomplished by using the set in conjunction with any one of the radio-transmitter systems. Provision is made for crew members to monitor one or more channels simultaneously by use of the set. Each crew member may interrupt any radio signal on the communication channel for purpose of voice communication. Principal components of the set are four master station controls, four jack boxes, an amplifier, a junction box, and eight headset-microphones.

14–3. The master station controls and jack boxes are connected in parallel to the system at common points on the main radio junction box. The microphone switch at any one of the master station controls or jack boxes will permit audio signals to be sent from the microphone to the amplifier, where it is amplified and distributed to all other master station controls and jack boxes. Voice communications for modulating a selected transmitter are sent from the microphone to the master station control and then to the selected transmitter. Selection of the transmitter is performed at the control of the transmitting master station. The jack boxes can be used only for sending and receiving voice communications within the aircraft. Signals from the receiver system are sent to the master station control. The desired signal is selected at the control and fed to the headset of the master station control. When multiple signals are desired at a master station control the signals are sent from the master station control to the amplifier where they are amplified and returned to the master station controls for transmission to the headsets. Figure 14–2 illustrates complete system data flow.

14–4. MASTER STATION CONTROL C-166/AIC-3. (See figure 14–3.) The master station control provides the operator with functional and channel selection over the intercommunication set. There are four master station controls in the aircraft; one each for the pilot, copilot, radio operator, and radar-navigator. Microphone switches installed on the pilot's and copilot's control wheel and microphone foot switches installed at the radio operator's and radar-navigator's stations provide talk and listen functions for the channel selected. The panel contains a microphone switch for selection of INTER, HF COMMAND, LIAISON, VHF COMMAND, and also a CALL position to enable any of these four stations to call all other stations, including interphone stations, by voice communication, regardless of the setting of the microphone or audio selector switches at the other stations. A filter selector switch provides for selection of VOICE, RANGE or BOTH of the radio compass audio. The audio switches are used to select receiver outputs of the automatic compass, marker, VHF navigation, intercommunication system, UHF communication, liaison range, and VHF communication. A volume control, an emergency telephone jack, and a one tube amplifier are also located on the master station control panel.

14-5. ADAPTER, Head Set - MICROPHONE MX1646/A1C. (See figure 14-3.) An adapter and mike button is provided for the left and right hand observers, the bow and tail compartments.

14–6. AMPLIFIER AM-26/AIC. (See figure 14–3.) The amplifier is a two-stage audio amplifier used to amplify voice communications between all stations within the aircraft. Controls located on the amplifier are a gain control and a on-off switch. The amplifier is located at the radar-navigator's station on the second shelf.

14–7. JUNCTION BOX J-90/AIC-3. (See figure 14–3.) The junction box provides a means for interconnecting all stations of the intercommunications set in parallel. The junction box is located within the main radio junction box.

14–8. OPERATIONAL CHECKOUT.

14–9. OPERATIONAL CHECKOUT OF AN/AIC-3.

a. Make sure aircraft is electrically grounded to an unpainted surface on either main landing gear or nose gear.

b. Connect electrical power source.

c. Rotate microphone selector switches on pilot's, copilot's, radio operator's, and radar-navigator's master station controls to INTER.

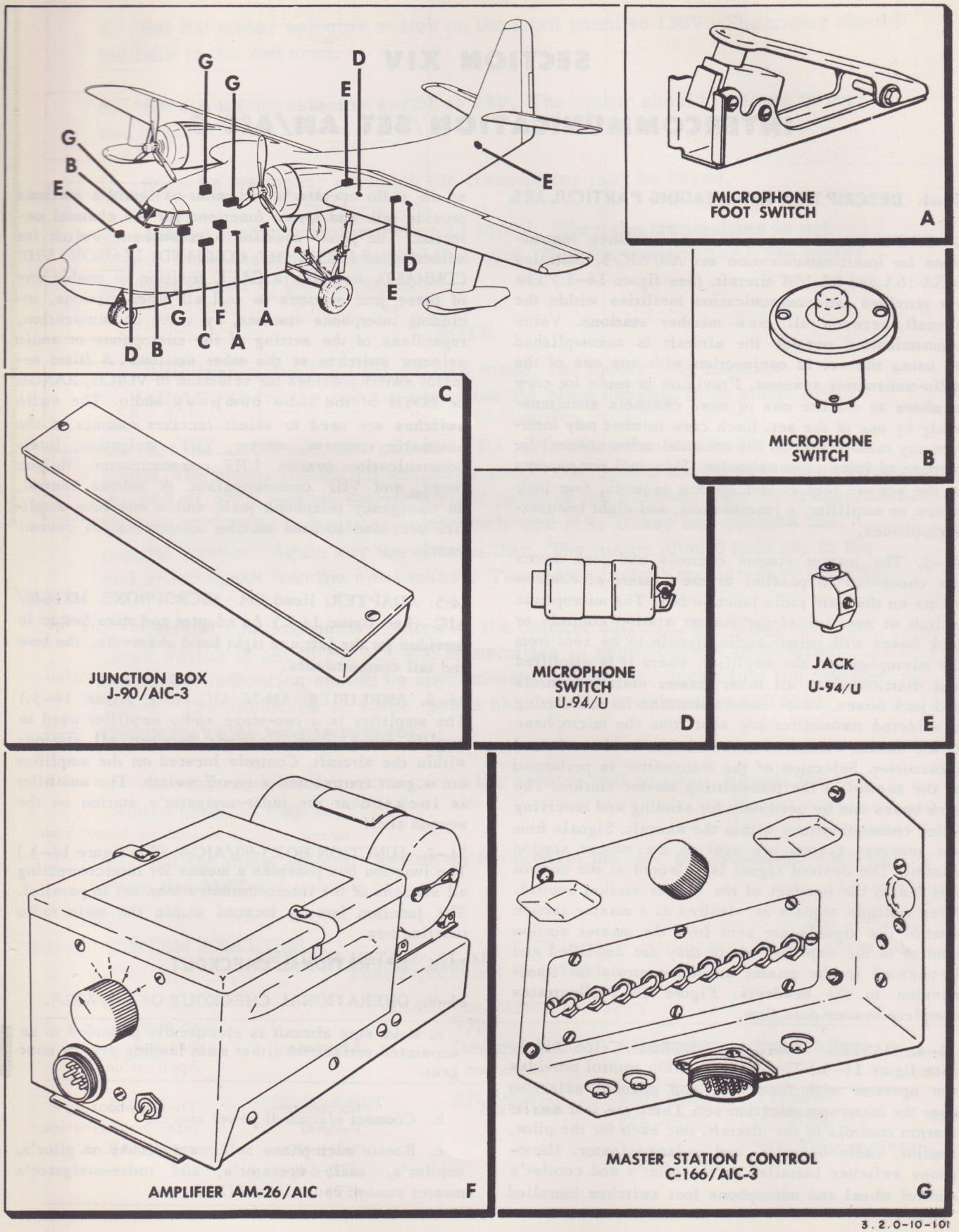

3.2.0-10-101

Figure 14–1. Intercommunication Set AN/AIC-3 Component Locations

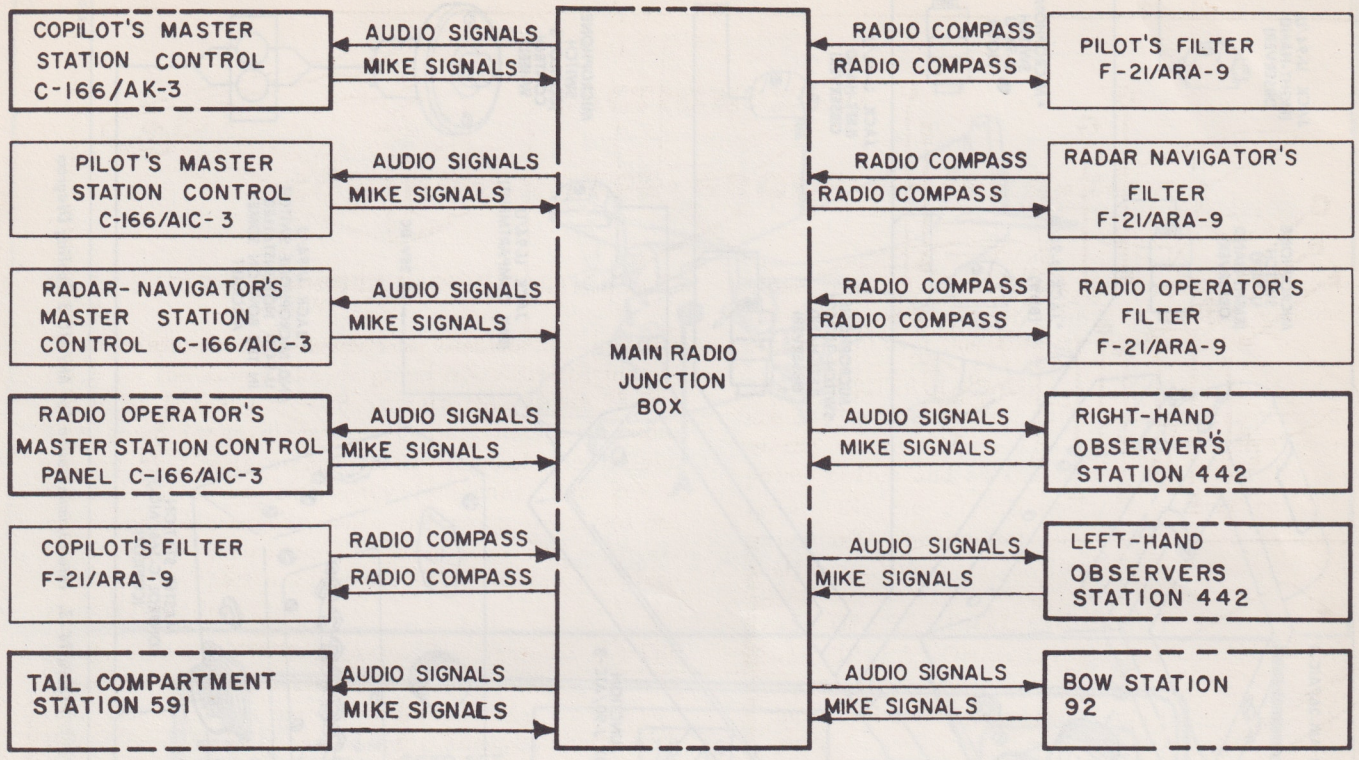

Figure 14–2. Intercommunication Set AN/AIC-3 Complete Functional Data Flow

d. Press microphone switch and talk successively to each station.

RESULT: All stations should receive signals.

e. Place microphone selector switch of any three master station controls to any position other than INTER and place interphone audio switches OFF. Rotate and hold microphone selector switch of remaining master station control to CALL; press microphone switch and talk.

RESULT: All stations should hear call overriding other audio.

f. On master station controls place all receiver audio toggle switches at ON, collectively or individually.

RESULT: Output of all receivers that are operating should be heard.

g. Place filter switch at any one master station control to VOICE.

RESULT: Voice should be heard from radio compass.

h. Place filter switch at any one master station control to RANGE.

RESULT: Range signals should be heard from radio compass.

i. Place all switches in off positions.

j. Disconnect electrical power source.

14–10. SYSTEM ANALYSIS.

TEST EQUIPMENT REQUIRED

Figure and Index NO.	Name	Type Designation	Alternate	Use and Application
(None)	MULTIMETER	AN/PSM-6	Multimeter, Federal Stock NO. 6625-649-4593	Troubleshooting intercommunication set AN/AIC-3.

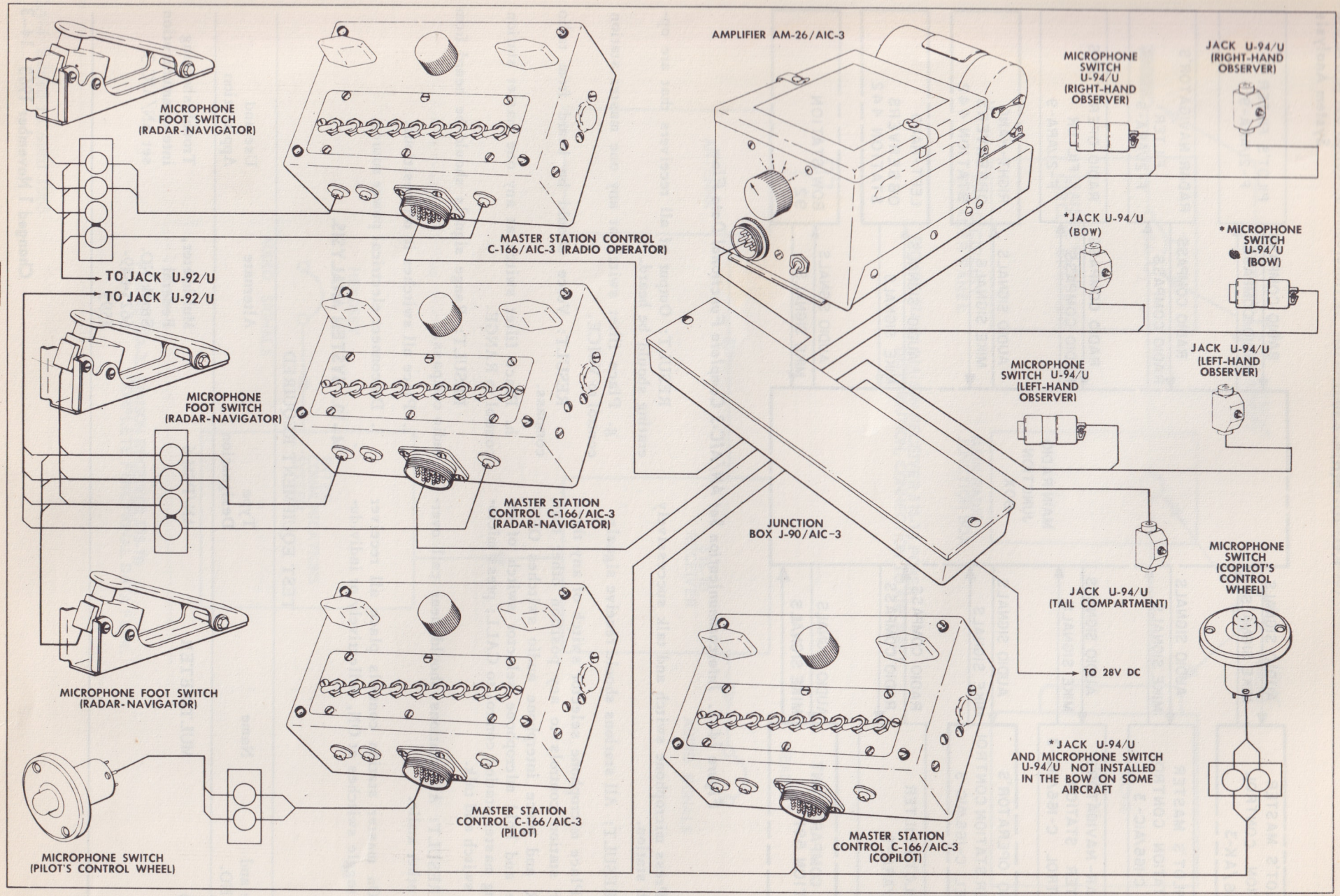

Figure 14–3. Intercommunication Set AN/AIC-3 Cabling Diagram

14–11. TROUBLESHOOTING AN/AIC-3. (See figures 14–4 and 14–5.)

SYMPTOM	FUNCTIONAL LOOP	KEY TEST POINTS
Complete set inoperative.	Power.	1, 2, 3, and 4
One master station control or jack box does not operate.	Power.	1, 2, 3, and 4
No call facilities at one master station control or jack box.	Microphone.	
No listen facilities at one master station control or one jack box.	Headset.	
No volume control on one master station control.	Amplifier.	

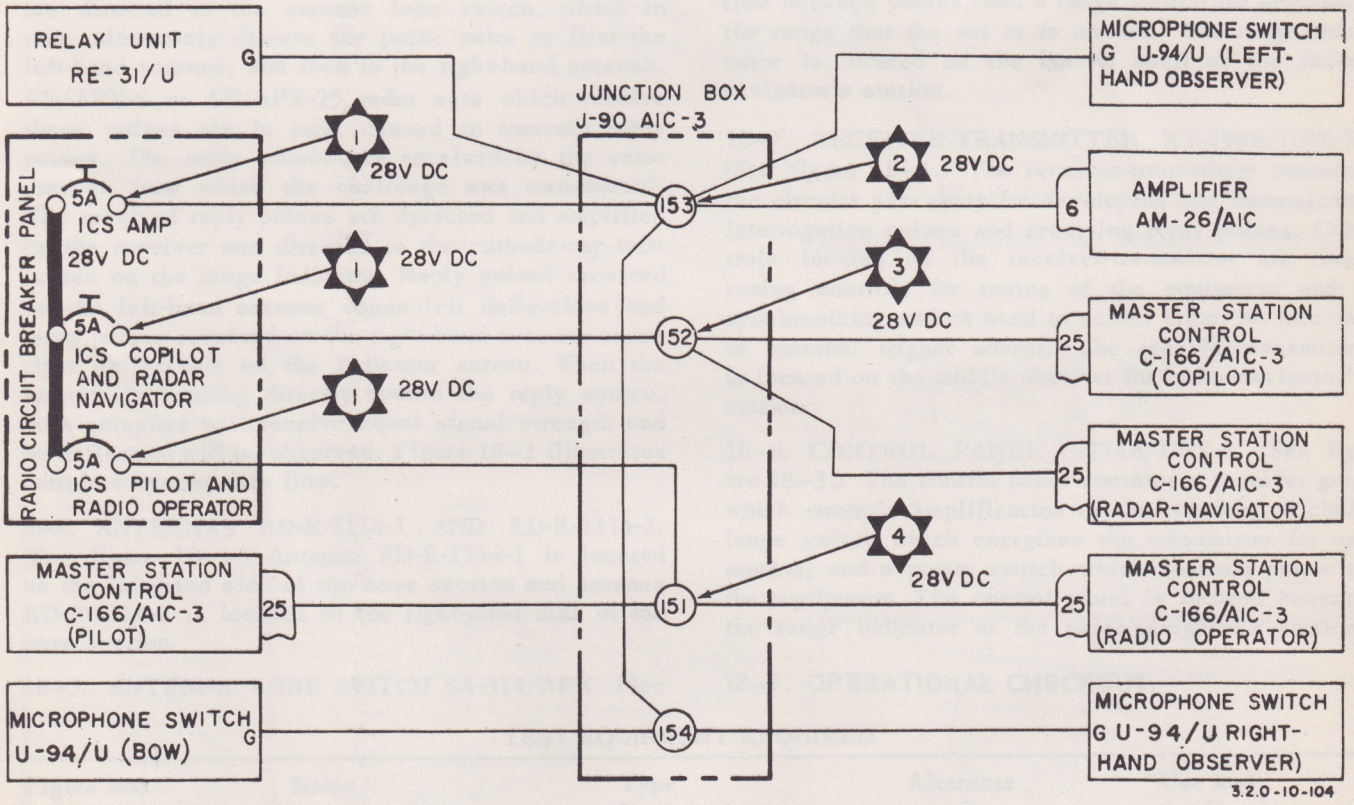

Figure 14–4. Intercommunication Set AN/AIC-3 Power Distribution, Connection to Aircraft

All data on page 14-6, figure 14-5, deleted.

SECTION XV

INTERCOMMUNICATION SET AN/AIC-8

15-1. DESCRIPTION AND LEADING PARTICULARS.

15-2. This section comprises maintenance instructions for intercommunication set AN/AIC-8, installed in SA-16A and SA-16B aircraft. (See figure 15-1.) The system provides intercommunication facilities within the aircraft between all crew member stations. Voice communication outside the aircraft is accomplished by using the set in conjunction with any one of the radio-transmitter systems. Provision is made for crew members to monitor one or more radio channels simultaneously by using the set. Each crew member may interrupt any radio signal on the communication channel for purpose of voice communication. Principal components of the set are four master controls, four mixer amplifiers, an AF amplifier, four filter assemblies, and eight headset-microphones.

15-3. Four master stations and four interphone stations are provided in the aircraft. The master and interphone stations are connected in parallel to the system at common points on the main radio junction box. The microphone switch at any one of the master or interphone stations will permit audio signals to be sent from the microphone to the AF amplifier where it is amplified and distributed to the other master and interphone stations. Voice communications for modulating a selected transmitter are sent from the microphone of a master station to the control and then to the selected transmitter. Selection of the transmitter is performed at the control of the transmitting master station. The interphone stations can only be used for sending and receiving voice communications within the aircraft. Signals from the receiver systems are sent to the controls of the master station. Each control selects the desired signal and feeds it to the headset of the master station. When multiple receiver signals are desired at a master station, the signals are sent from the control to the mixer amplifier where they are amplified and returned to the control for transmission to the headsets. Figure 15-2 illustrates complete system data flow.

15-4. MASTER STATIONS. Four master stations are provided in the aircraft, one each for the pilot, copilot, radio operator, and radar-navigator. Each master station contains a master control, filter assembly, headset, mixer amplifier, and a microphone.

15-5. INTERPHONE STATIONS. Four interphone stations are provided in the aircraft, one each for right-hand and left-hand observer, one in the tail compartment and one in the bow compartment. Each interphone station contains an adapter and a microphone switch which enables crew members at the interphone station to call any other station, regardless of the setting of the microphone switch at that station.

15-6. MASTER CONTROL C-633/AIC-8. (See figure 15-3.) The master control located at each master station is a switching device which controls the master station. The master control connects the station microphone to the input of any one of the transmitter systems and the mixer amplifier. The control also switches the station headsets onto the output of any one of the receiver systems and the AF amplifier with a choice of singular or simultaneous montioring.

15-7. MIXER AMPLIFIER AM-142/AIC. (See figure 15-3.) A mixer amplifier is used at each interphone station to amplify multiple receiver signals when simultaneous monitoring is selected.

15-8. AF AMPLIFIER AM-300/AIC. (See figure 15-3.) An AF amplifier is used to amplify voice communications between all stations within the aircraft. The amplifier contains an automatic gain control which increases amplification to compensate for voice amplitude losses with increased altitude.

15-9. FILTER ASSEMBLY F-90/AIC. (See figure 15-3.) A filter assembly is used at each master station to select voice and code radio signals of the radio compass audio.

15-10. OPERATIONAL CHECKOUT.

15-11. OPERATIONAL CHECKOUT OF AN/AIC-8.

a. Make sure aircraft is electrically grounded to an unpainted surface on either main landing gear or nose gear.

b. Connect electrical power source

c. Rotate microphone selector switches at pilot's, copilot's, radio operator's, and radar-navigator's stations to INTER.

d. Press microphone switch and talk successively at each station.

RESULT: All stations should hear call.

e. Place microphone selector switch of any three master stations to any position other than INTER. Turn audio switches off; rotate and hold microphone

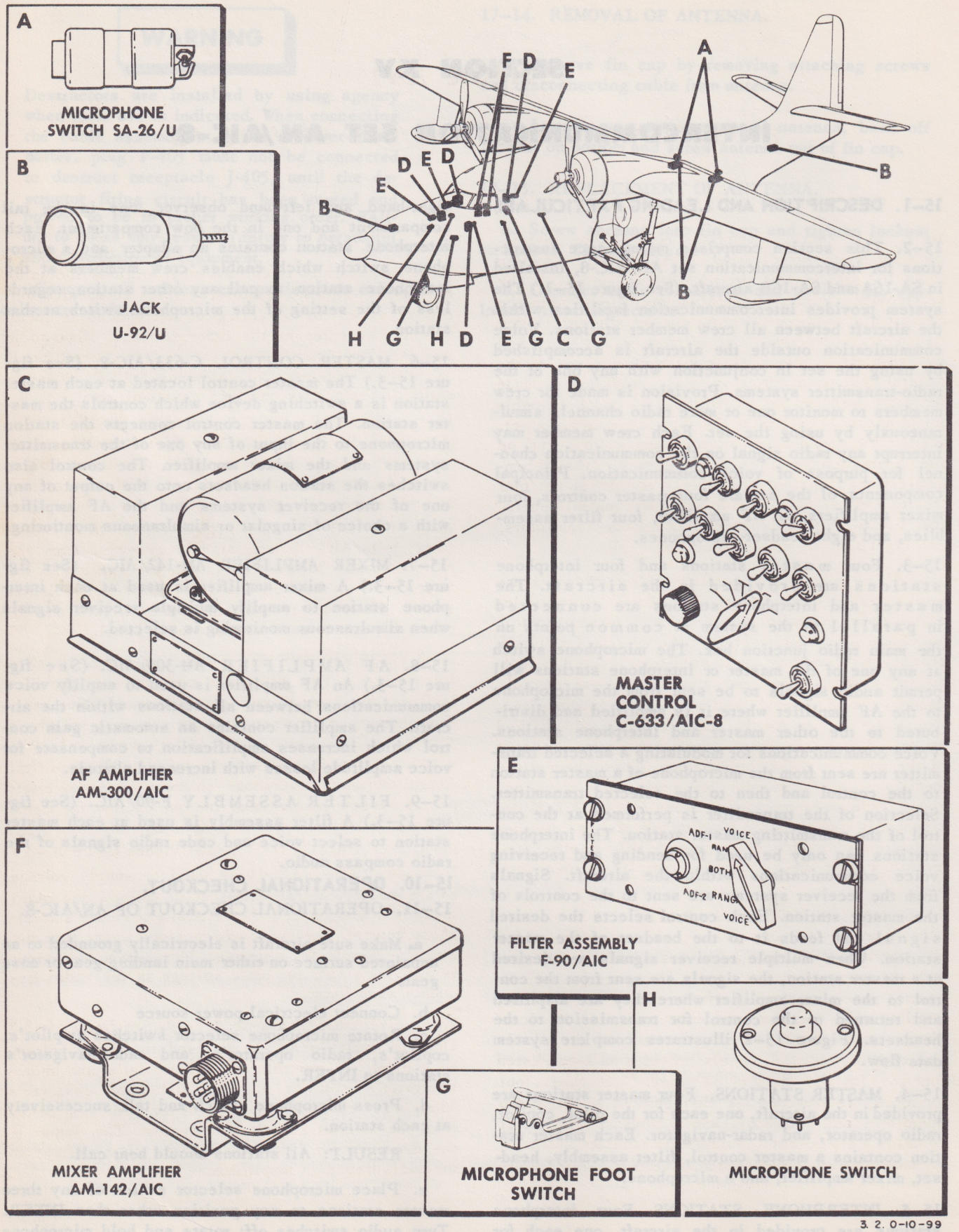

Figure 15–1. Intercommunication Set AN/AIC-8 Component Locations

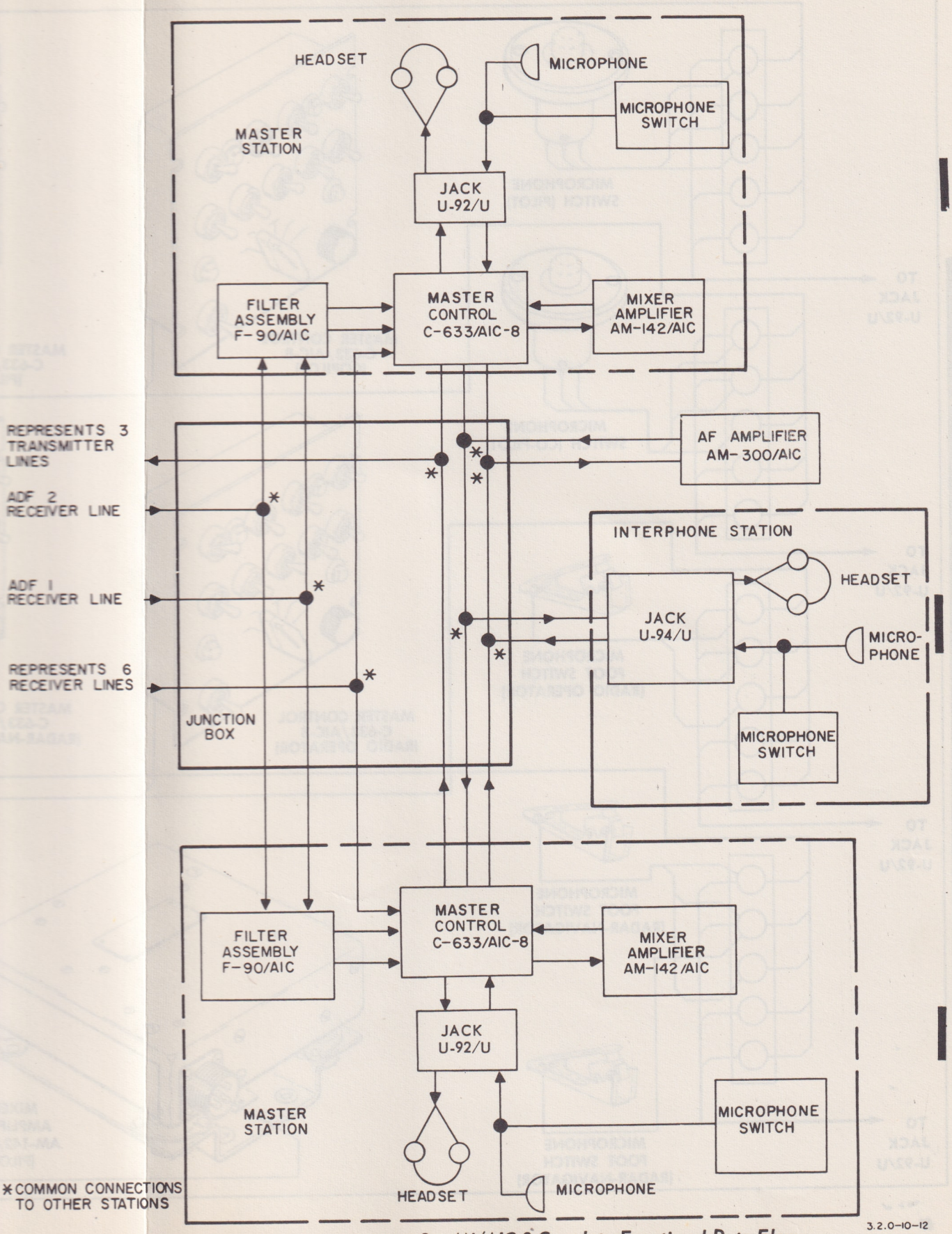

Figure 15–2. Intercommunication Set AN/AIC-8 Complete Functional Data Flow

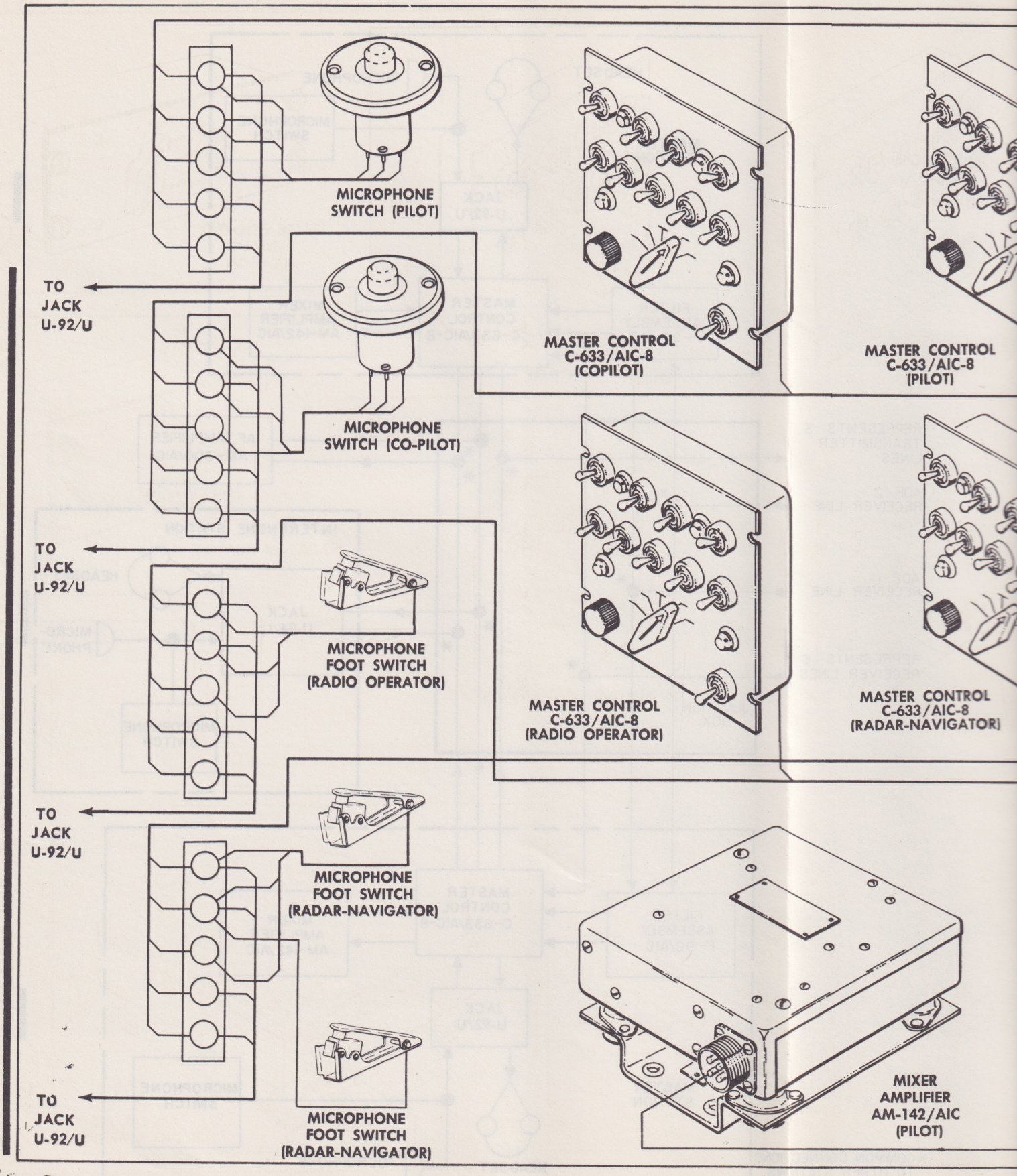
MICROPHONE SWITCH (PILOT)
TO JACK U-92/U
MICROPHONE SWITCH (CO-PILOT)
TO JACK U-92/U
MICROPHONE FOOT SWITCH (RADIO OPERATOR)
TO JACK U-92/U
MICROPHONE FOOT SWITCH (RADAR-NAVIGATOR)
TO JACK U-92/U
MICROPHONE FOOT SWITCH (RADAR-NAVIGATOR)
MASTER CONTROL C-633/AIC-8 (COPILOT)
MASTER CONTROL C-633/AIC-8 (PILOT)
MASTER CONTROL C-633/AIC-8 (RADIO OPERATOR)
MASTER CONTROL C-633/AIC-8 (RADAR-NAVIGATOR)
MIXER AMPLIFIER AM-142/AIC (PILOT)

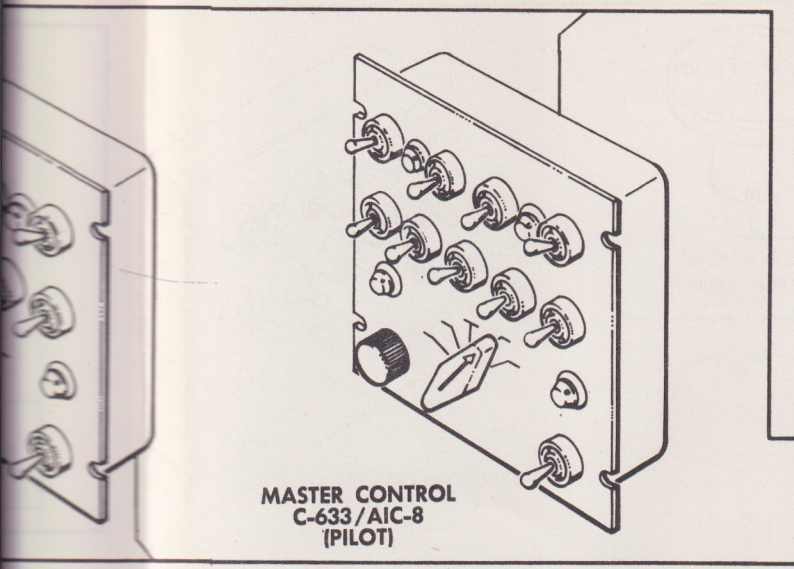

MASTER CONTROL
C-633/AIC-8
(PILOT)

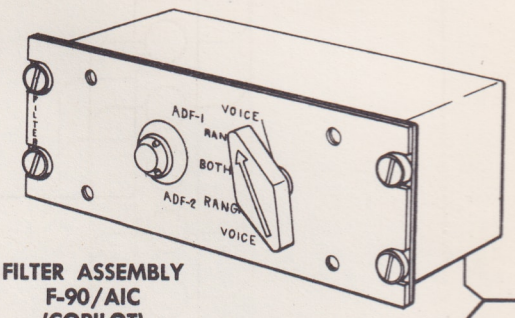

FILTER ASSEMBLY
F-90/AIC
(COPILOT)

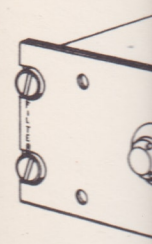

FILTER ASSEMBL
F-90/AIC
(PILOT)

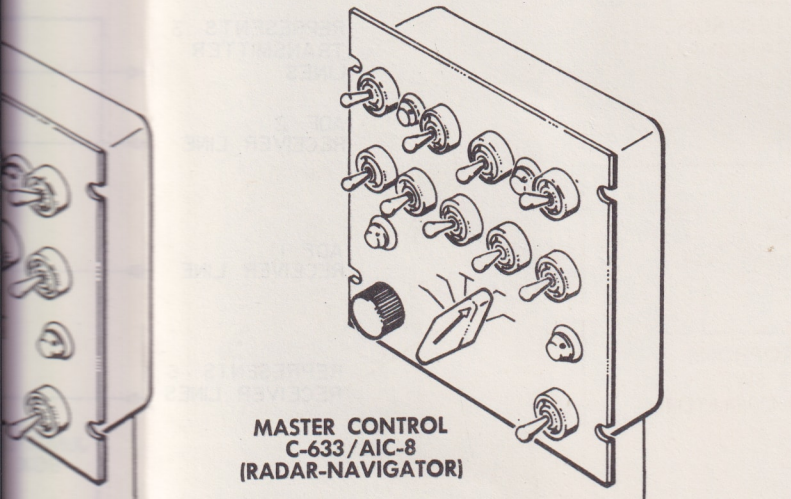

MASTER CONTROL
C-633/AIC-8
(RADAR-NAVIGATOR)

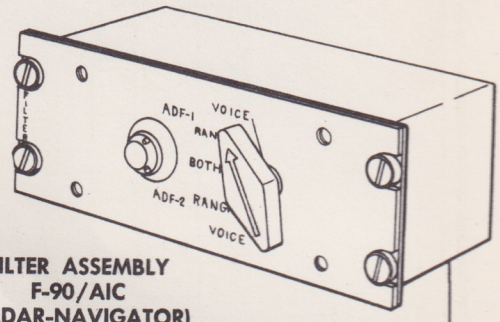

FILTER ASSEMBLY
F-90/AIC
(RADAR-NAVIGATOR)

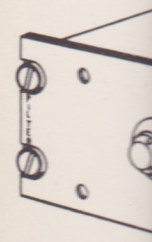

FILTER ASSEM
F-90/AIC
(RADIO OPERA

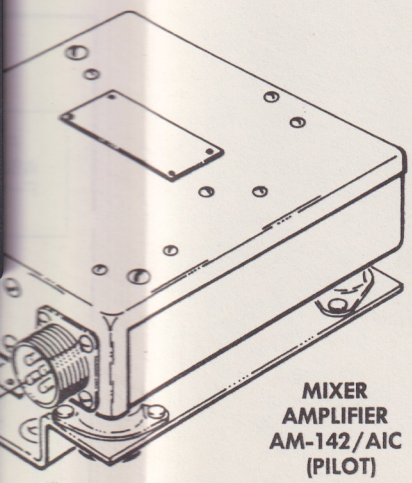

MIXER
AMPLIFIER
AM-142/AIC
(PILOT)

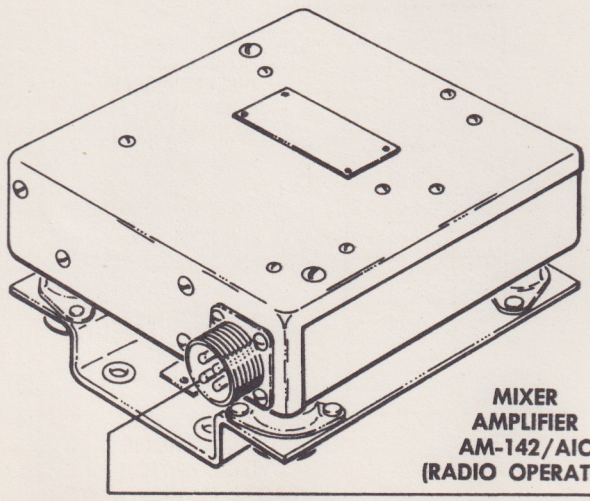

MIXER
AMPLIFIER
AM-142/AIC
(RADIO OPERATOR)

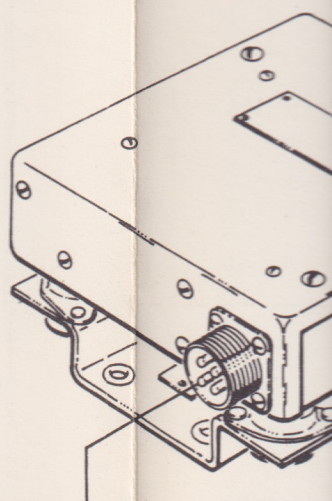

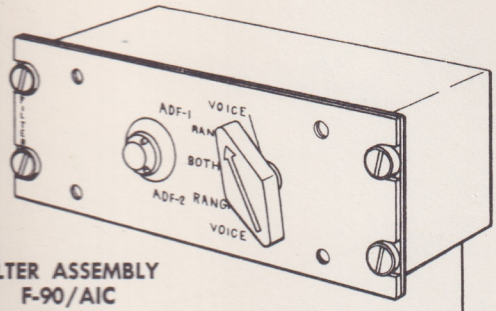

FILTER ASSEMBLY
F-90/AIC
(PILOT)

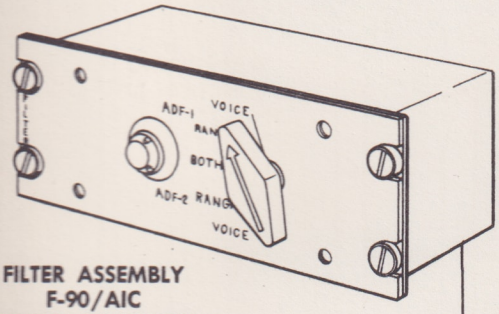

FILTER ASSEMBLY
F-90/AIC
(RADIO OPERATOR)

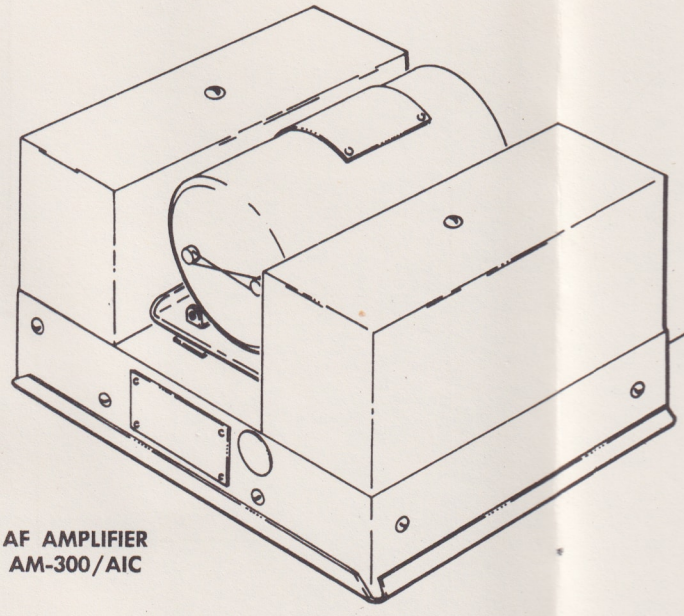

AF AMPLIFIER
AM-300/AIC

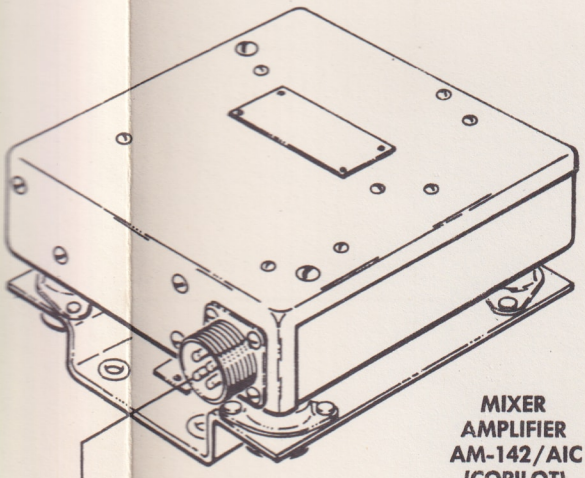

MIXER
AMPLIFIER
AM-142/AIC
(COPILOT)

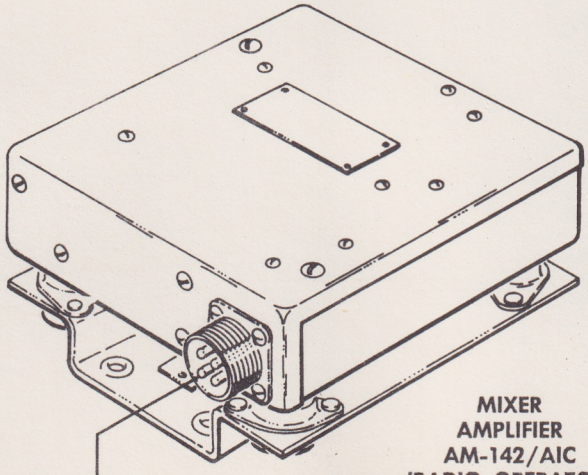

MIXER
AMPLIFIER
AM-142/AIC
(RADIO OPERATOR)



JACK
U-92/U

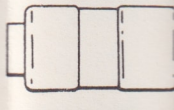

MICROPHONE
SWITCH SA-26/
(LEFT-HAND OBSE

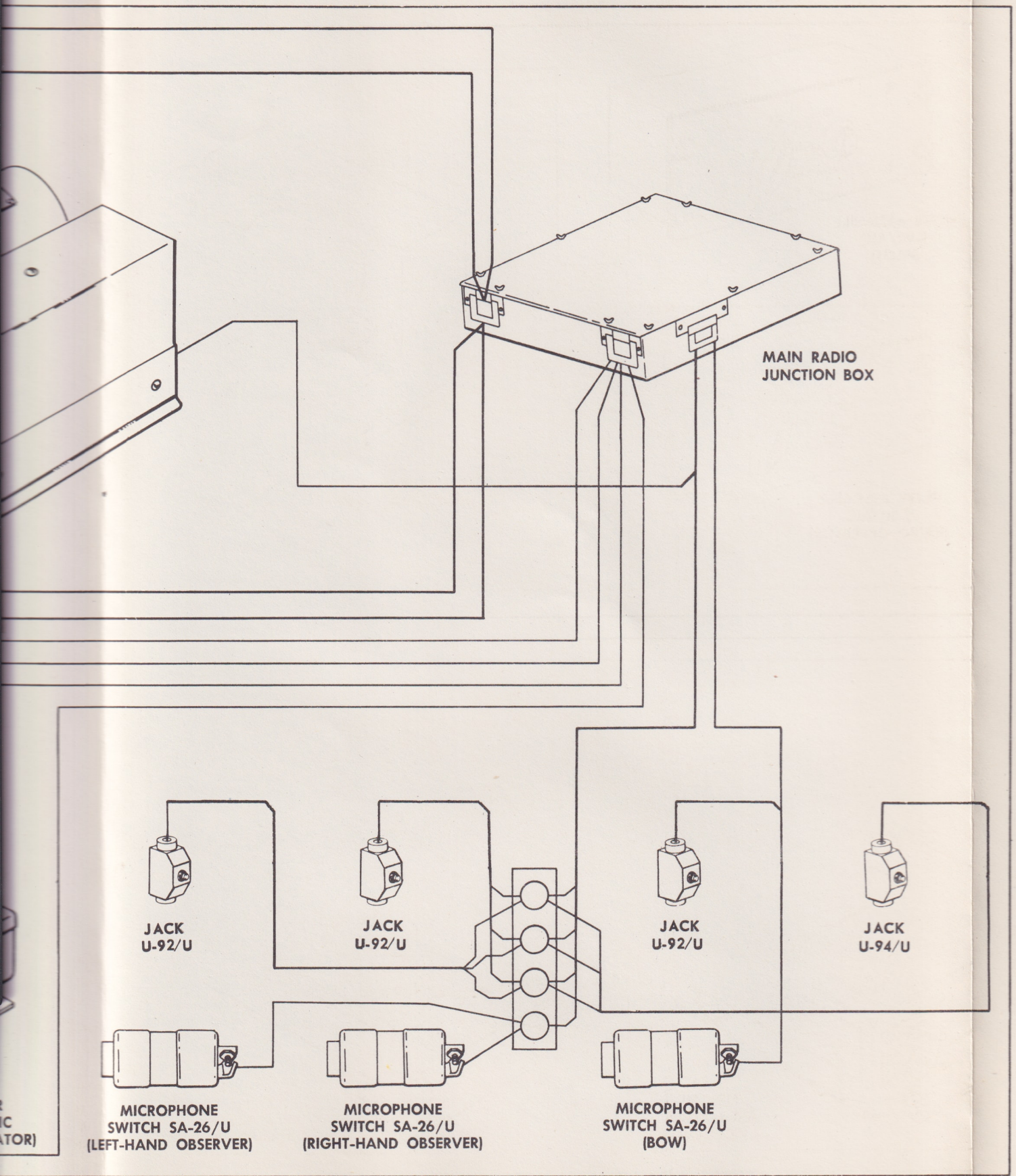

3. 2. 0-10-103

Figure 15-3. Intercommunication Set AN/AIC-8 Cabling Diagram

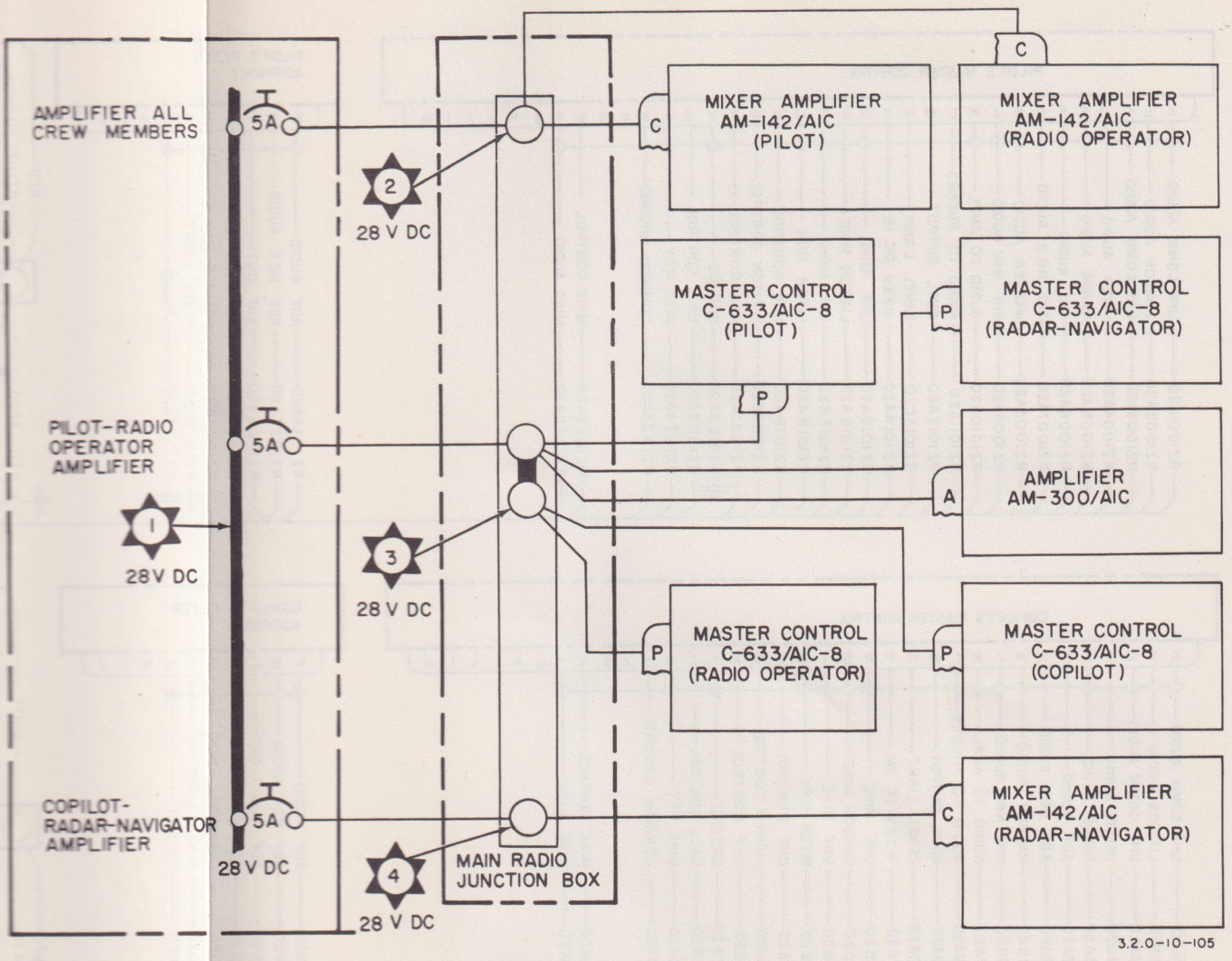

Figure 15–4. Intercommunication Set AN/AIC-8 Power Distribution, Connection to Aircraft

selector switch of remaining master station to CALL. Press microphone switch and talk.

RESULT: All stations should hear call overriding other audio.

f. At each of master stations place receiver audio toggle switches at ON.

RESULT: Output of all receivers operating should be heard.

g. Establish radio contact with another aircraft or ground station.

RESULT: Voice communications should be sent and received through each master station.

h. Disconnect electrical power source.

15–12. SYSTEM ANALYSIS.

TEST EQUIPMENT REQUIRED

Figure and Index NO.	Name	Type Designation	Alternate	Use and Application
(None)	MULTIMETER	AN/PSM-6	Multimeter, Federal Stock NO. 6625-649-4593	Troubleshooting intercommunication set AN/AIC-8.

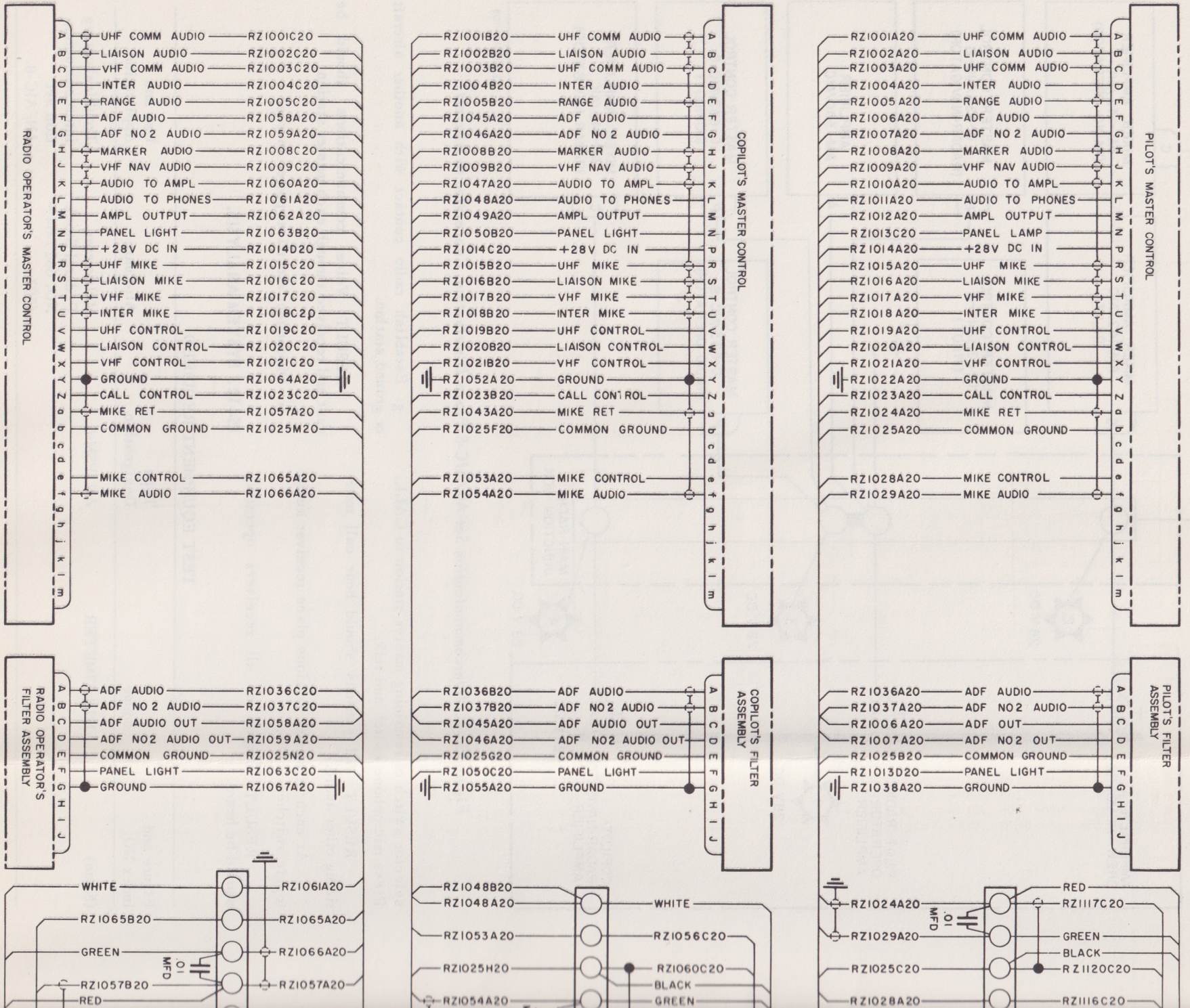
RADIO OPERATOR'S MASTER CONTROL
UHF COMM AUDIO RZ1001C20
LIAISON AUDIO RZ1002C20
VHF COMM AUDIO RZ1003C20
INTER AUDIO RZ1004C20
RANGE AUDIO RZ1005C20
ADF AUDIO RZ1058A20
ADF NO 2 AUDIO RZ1059A20
MARKER AUDIO RZ1008C20
VHF NAV AUDIO RZ1009C20
AUDIO TO AMPL RZ1060A20
AUDIO TO PHONES RZ1061A20
AMPL OUTPUT RZ1062A20
PANEL LIGHT RZ1063B20
+28V DC IN RZ1014D20
UHF MIKE RZ1015C20
LIAISON MIKE RZ1016C20
VHF MIKE RZ1017C20
INTER MIKE RZ1018C20
UHF CONTROL RZ1019C20
LIAISON CONTROL RZ1020C20
VHF CONTROL RZ1021C20
GROUND RZ1064A20
CALL CONTROL RZ1023C20
MIKE RET RZ1057A20
COMMON GROUND RZ1025M20
MIKE CONTROL RZ1065A20
MIKE AUDIO RZ1066A20
RADIO OPERATOR'S FILTER ASSEMBLY
ADF AUDIO RZ1036C20
ADF NO 2 AUDIO RZ1037C20
ADF AUDIO OUT RZ1058A20
ADF NO2 AUDIO OUT RZ1059A20
COMMON GROUND RZ1025N20
PANEL LIGHT RZ1063C20
GROUND RZ1067A20
WHITE RZ1061A20
RZ1065B20 RZ1065A20
GREEN RZ1066A20
.01 MFD
RZ1057B20 RZ1057A20
RED
COPILOT'S MASTER CONTROL
RZ1001B20 UHF COMM AUDIO
RZ1002B20 LIAISON AUDIO
RZ1003B20 UHF COMM AUDIO
RZ1004B20 INTER AUDIO
RZ1005B20 RANGE AUDIO
RZ1045A20 ADF AUDIO
RZ1046A20 ADF NO 2 AUDIO
RZ1008B20 MARKER AUDIO
RZ1009B20 VHF NAV AUDIO
RZ1047A20 AUDIO TO AMPL
RZ1048A20 AUDIO TO PHONES
RZ1049A20 AMPL OUTPUT
RZ1050B20 PANEL LIGHT
RZ1014C20 +28V DC IN
RZ1015B20 UHF MIKE
RZ1016B20 LIAISON MIKE
RZ1017B20 VHF MIKE
RZ1018B20 INTER MIKE
RZ1019B20 UHF CONTROL
RZ1020B20 LIAISON CONTROL
RZ1021B20 VHF CONTROL
RZ1052A20 GROUND
RZ1023B20 CALL CONTROL
RZ1043A20 MIKE RET
RZ1025F20 COMMON GROUND
RZ1053A20 MIKE CONTROL
RZ1054A20 MIKE AUDIO
COPILOT'S FILTER ASSEMBLY
RZ1036B20 ADF AUDIO
RZ1037B20 ADF NO2 AUDIO
RZ1045A20 ADF AUDIO OUT
RZ1046A20 ADF NO2 AUDIO OUT
RZ1025G20 COMMON GROUND
RZ1050C20 PANEL LIGHT
RZ1055A20 GROUND
RZ1048B20
RZ1048A20 WHITE
RZ1053A20 RZ1056C20
RZ1025H20 RZ1060C20
BLACK
RZ1054A20 GREEN
PILOT'S MASTER CONTROL
RZ1001A20 UHF COMM AUDIO
RZ1002A20 LIAISON AUDIO
RZ1003A20 UHF COMM AUDIO
RZ1004A20 INTER AUDIO
RZ1005A20 RANGE AUDIO
RZ1006A20 ADF AUDIO
RZ1007A20 ADF NO 2 AUDIO
RZ1008A20 MARKER AUDIO
RZ1009A20 VHF NAV AUDIO
RZ1010A20 AUDIO TO AMPL
RZ1011A20 AUDIO TO PHONES
RZ1012A20 AMPL OUTPUT
RZ1013C20 PANEL LAMP
RZ1014A20 +28V DC IN
RZ1015A20 UHF MIKE
RZ1016A20 LIAISON MIKE
RZ1017A20 VHF MIKE
RZ1018A20 INTER MIKE
RZ1019A20 UHF CONTROL
RZ1020A20 LIAISON CONTROL
RZ1021A20 VHF CONTROL
RZ1022A20 GROUND
RZ1023A20 CALL CONTROL
RZ1024A20 MIKE RET
RZ1025A20 COMMON GROUND
RZ1028A20 MIKE CONTROL
RZ1029A20 MIKE AUDIO
PILOT'S FILTER ASSEMBLY
RZ1036A20 ADF AUDIO
RZ1037A20 ADF NO2 AUDIO
RZ1006A20 ADF OUT
RZ1007A20 ADF NO2 OUT
RZ1025B20 COMMON GROUND
RZ1013D20 PANEL LIGHT
RZ1038A20 GROUND
RZ1024A20 RED
.01 MFD
RZ1117C20
RZ1029A20 GREEN
BLACK
RZ1025C20 RZ1120C20
RZ1028A20 RZ1116C20

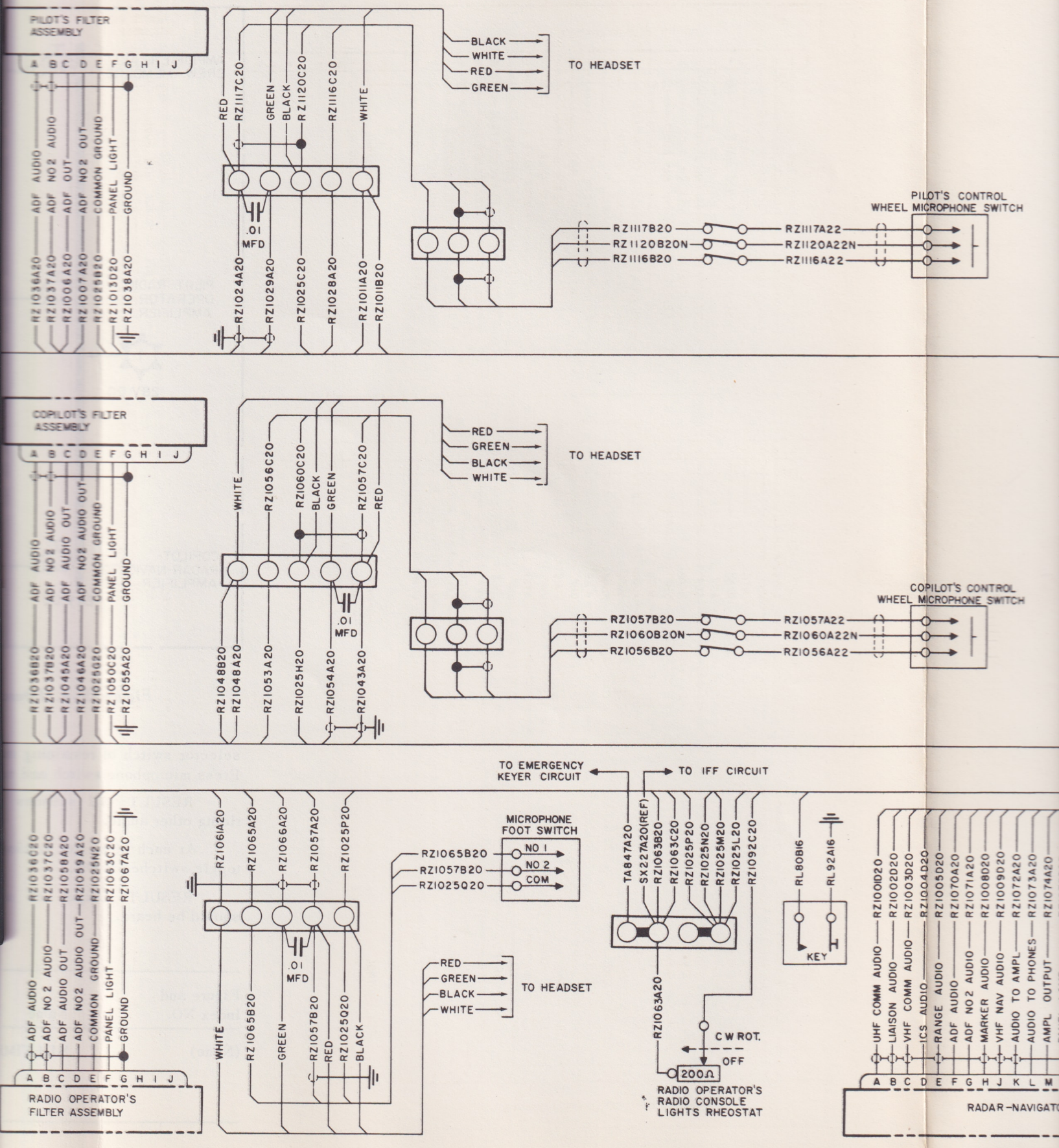

Figure 15-5. Inte

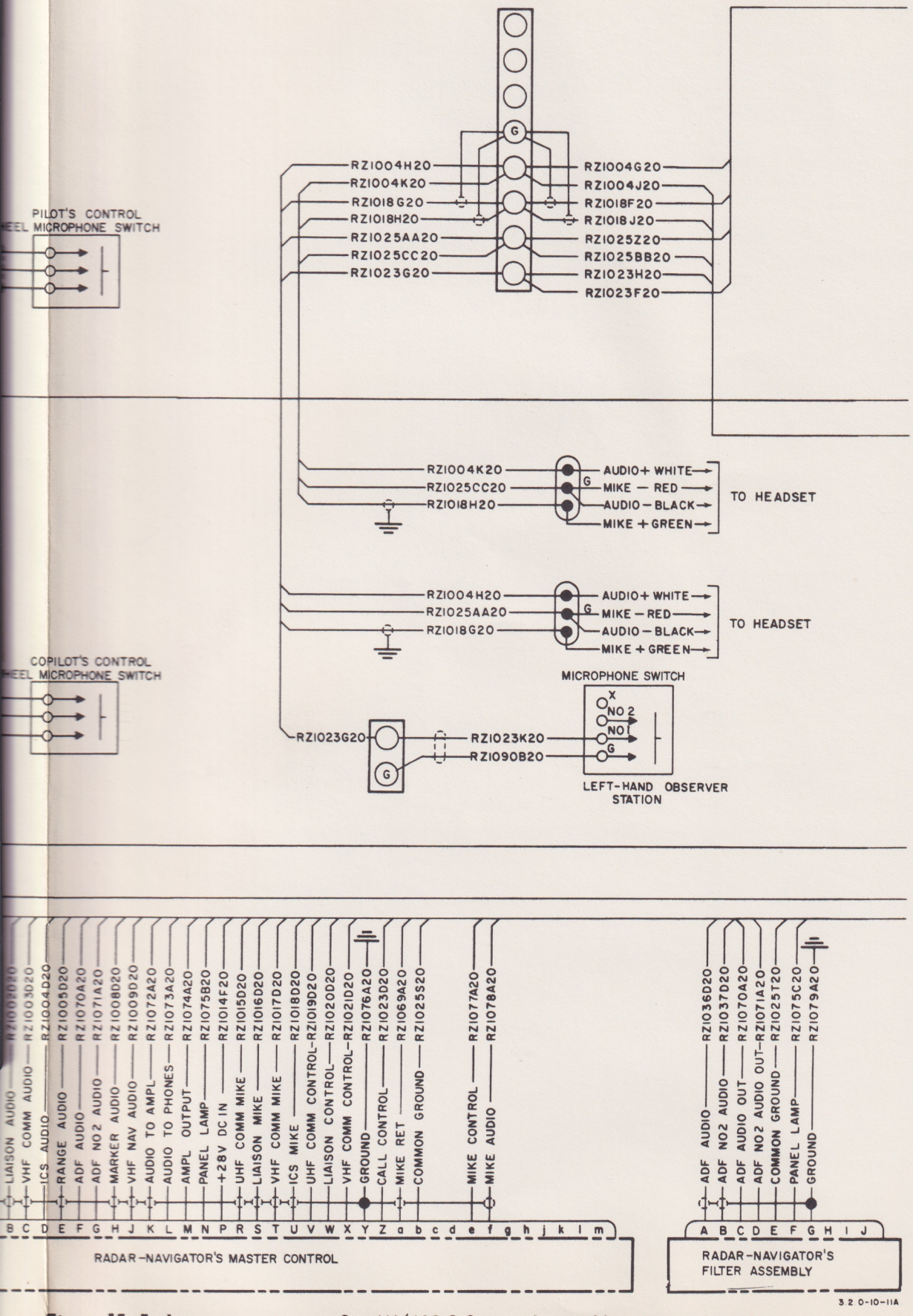

Figure 15-5. Intercommunication Set AN/AIC-8 System Intercabling (Sheet 1 of 2)

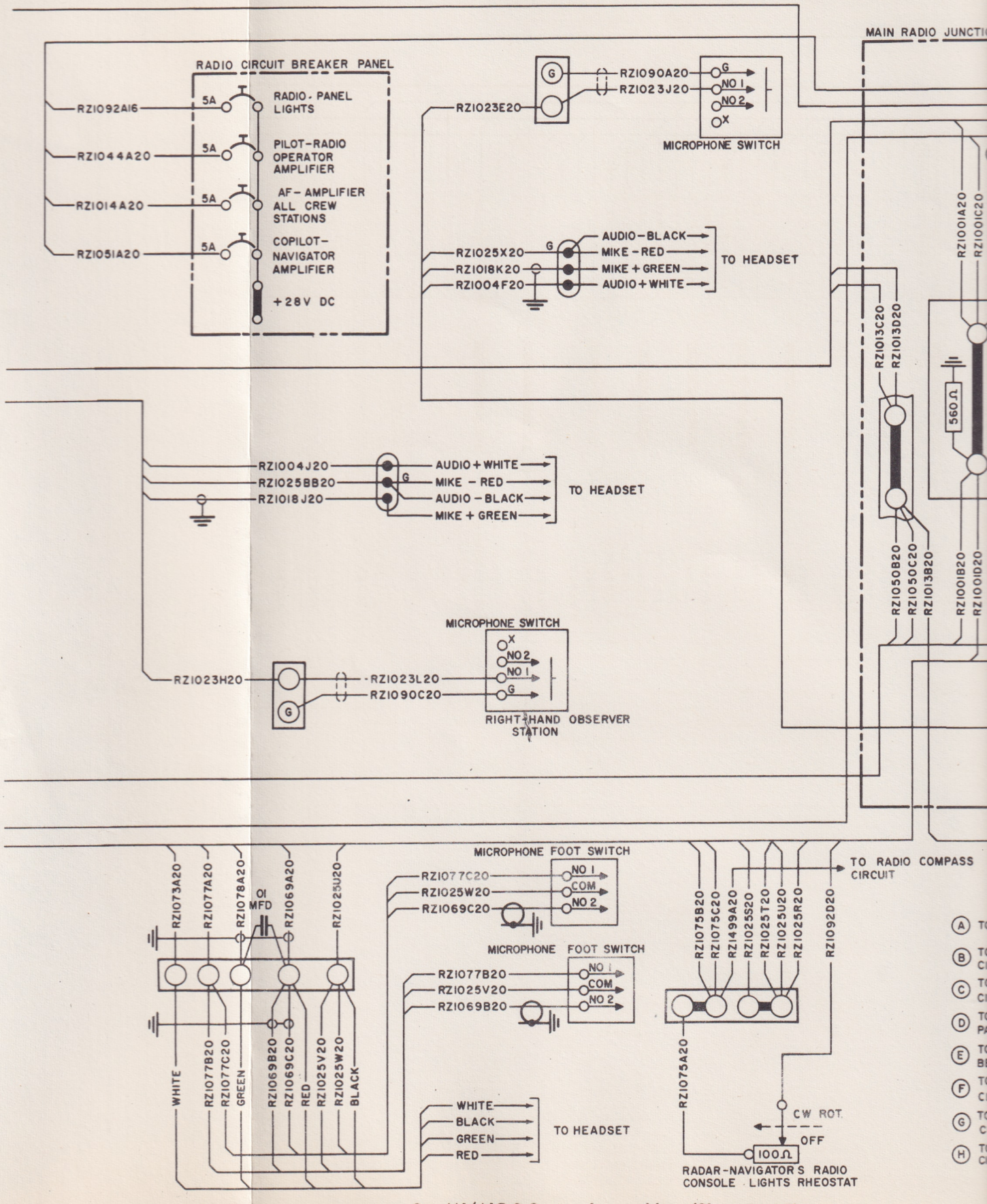

Figure 15-5. Intercommunication Set AN/AIC-8 System Intercabling (Sheet 2 of 2)

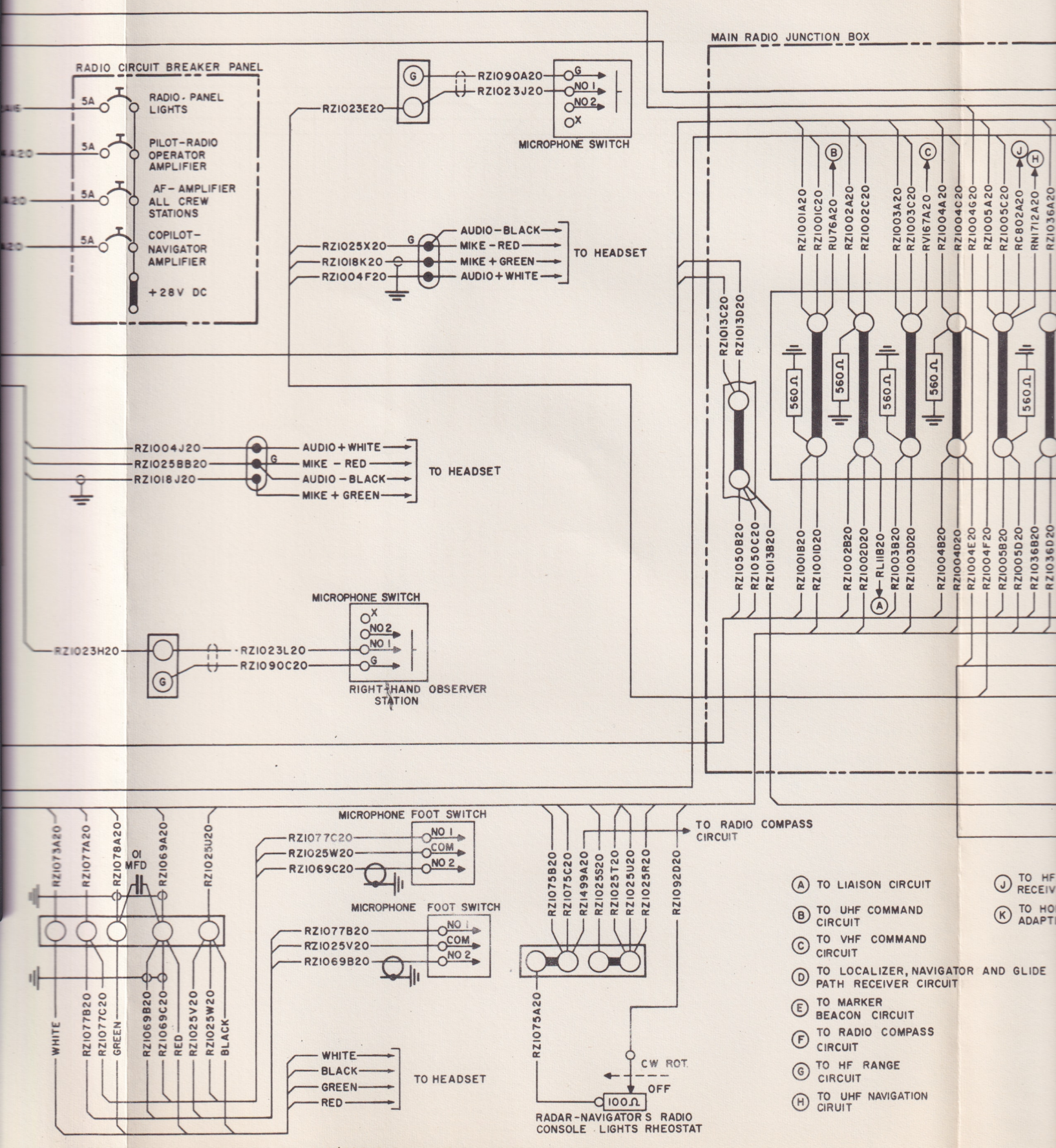

Figure 15-5. Intercommunication Set AN/AIC-8 System Intercabling (Sheet 2 of 2)

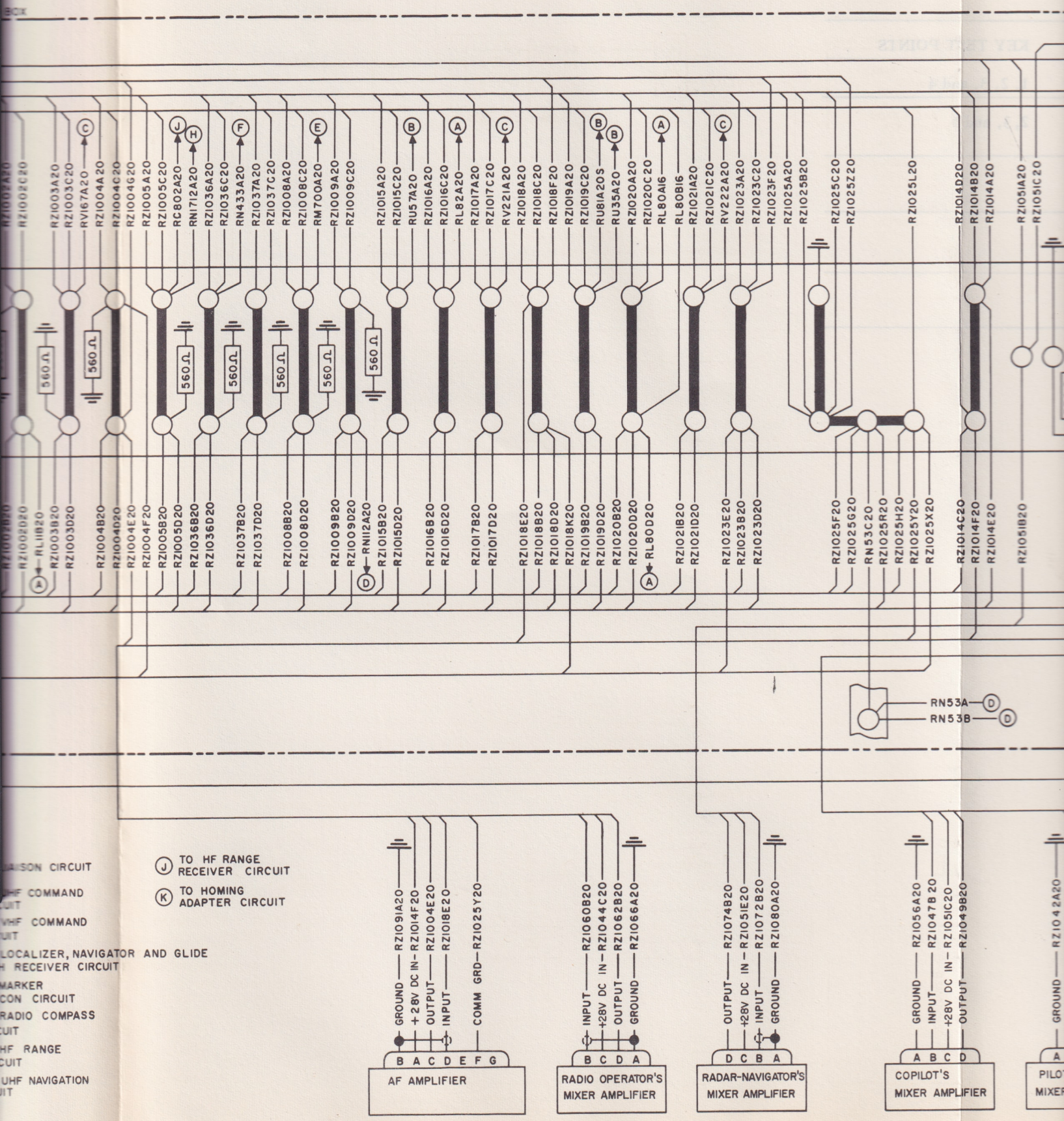

RZ1002A20
RZ1002C20
RZ1003A20
RZ1003C20
RV167A20
RZ1004A20
RZ1004C20
RZ1004G20
RZ1005A20
RZ1005C20
RC802A20
RN1712A20
RZ1036A20
RZ1036C20
RN433A20
RZ1037A20
RZ1037C20
RZ1008A20
RZ1008C20
RM700A20
RZ1009A20
RZ1009C20
RZ1015A20
RZ1015C20
RU57A20
RZ1016A20
RZ1016C20
RL82A20
RZ1017A20
RZ1017C20
RV221A20
RZ1018A20
RZ1018C20
RZ1018F20
RZ1019A20
RZ1019C20
RU81A20S
RU35A20
RZ1020A20
RZ1020C20
RL80A16
RL80B16
RZ1021A20
RZ1021C20
RV222A20
RZ1023A20
RZ1023C20
RZ1023F20
RZ1025A20
RZ1025B20
RZ1025C20
RZ1025Z20
RZ1025L20
RZ1014D20
RZ1014B20
RZ1014A20
RZ1051A20
RZ1051C20
560 Ω
RZ1002D20
RL11B20
RZ1003B20
RZ1003D20
RZ1004B20
RZ1004D20
RZ1004E20
RZ1004F20
RZ1005B20
RZ1005D20
RZ1036B20
RZ1036D20
RZ1037B20
RZ1037D20
RZ1008B20
RZ1008D20
RZ1009B20
RZ1009D20
RN112A20
RZ1015B20
RZ1015D20
RZ1016B20
RZ1016D20
RZ1017B20
RZ1017D20
RZ1018E20
RZ1018B20
RZ1018D20
RZ1018K20
RZ1019B20
RZ1019D20
RZ1020B20
RZ1020D20
RL80D20
RZ1021B20
RZ1021D20
RZ1023E20
RZ1023B20
RZ1023D20
RZ1025F20
RZ1025G20
RN53C20
RZ1025R20
RZ1025H20
RZ1025Y20
RZ1025X20
RZ1014C20
RZ1014F20
RZ1014E20
RZ1051B20
RN53A
RN53B
GROUND
+28V DC IN
OUTPUT
INPUT
COMM GRD
RZ1091A20
RZ1014F20
RZ1004E20
RZ1018E20
RZ1025Y20
B A C D E F G
AF AMPLIFIER
INPUT
+28V DC IN
OUTPUT
GROUND
RZ1060B20
RZ1044C20
RZ1062B20
RZ1066A20
B C D A
RADIO OPERATOR'S MIXER AMPLIFIER
OUTPUT
+28V DC IN
INPUT
GROUND
RZ1074B20
RZ1051E20
RZ1072B20
RZ1080A20
D C B A
RADAR-NAVIGATOR'S MIXER AMPLIFIER
GROUND
INPUT
+28V DC IN
OUTPUT
RZ1056A20
RZ1047B20
RZ1051C20
RZ1049B20
A B C D
COPILOT'S MIXER AMPLIFIER
GROUND
RZ1042A20
PILOT'S MIXER
J TO HF RANGE RECEIVER CIRCUIT
K TO HOMING ADAPTER CIRCUIT
AISON CIRCUIT
HF COMMAND
UIT
VHF COMMAND
UIT
LOCALIZER, NAVIGATOR AND GLIDE
H RECEIVER CIRCUIT
MARKER
CON CIRCUIT
RADIO COMPASS
UIT
HF RANGE
CUIT
UHF NAVIGATION
IT

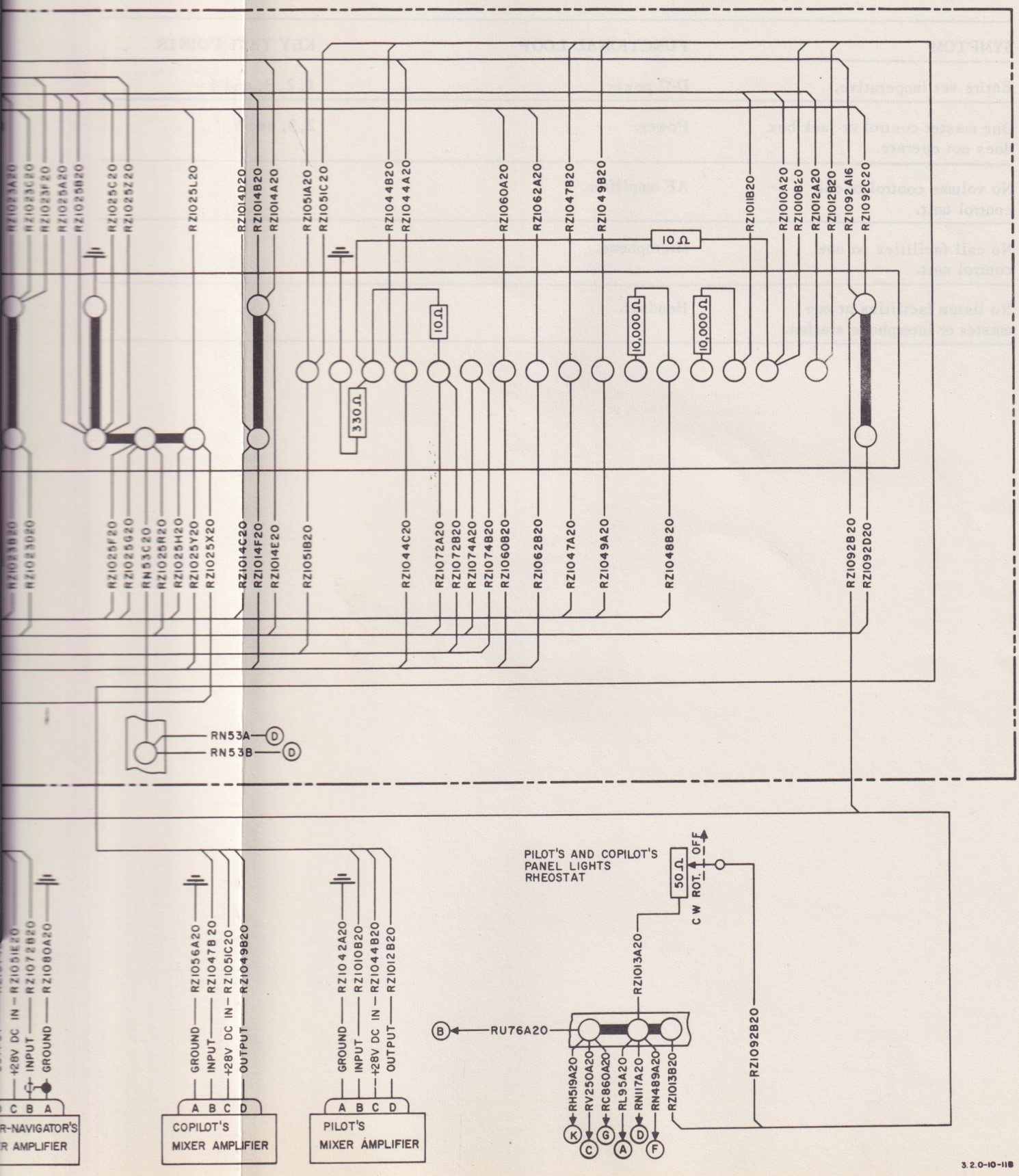
RZ1023A20
RZ1023C20
RZ1023F20
RZ1025A20
RZ1025B20
RZ1025C20
RZ1025Z20
RZ1025L20
RZ1014D20
RZ1014B20
RZ1014A20
RZ1051A20
RZ1051C20
RZ1044B20
RZ1044A20
RZ1060A20
RZ1062A20
RZ1047B20
RZ1049B20
10 Ω
RZ1011B20
RZ1010A20
RZ1010B20
RZ1012A20
RZ1012B20
RZ1092A16
RZ1092C20
330 Ω
10 Ω
10,000 Ω
10,000 Ω
RZ1023B20
RZ1023D20
RZ1025F20
RZ1025G20
RN53C20
RZ1025R20
RZ1025H20
RZ1025Y20
RZ1025X20
RZ1014C20
RZ1014F20
RZ1014E20
RZ1051B20
RZ1044C20
RZ1072A20
RZ1072B20
RZ1074A20
RZ1074B20
RZ1060B20
RZ1062B20
RZ1047A20
RZ1049A20
RZ1048B20
RZ1092B20
RZ1092D20
RN53A
RN53B
D
D
PILOT'S AND COPILOT'S
PANEL LIGHTS
RHEOSTAT
50 Ω
OFF
C W ROT
RZ1013A20
RZ1092B20
B
RU76A20
RH519A20
RV250A20
RC860A20
RL95A20
RN117A20
RN489A20
RZ1013B20
K
C
G
A
D
F
+28V DC IN — RZ1051E20
INPUT — RZ1072B20
GROUND — RZ1060A20
C B A
R-NAVIGATOR'S
R AMPLIFIER
GROUND — RZ1056A20
INPUT — RZ1047B20
+28V DC IN — RZ1051C20
OUTPUT — RZ1049B20
A B C D
COPILOT'S
MIXER AMPLIFIER
GROUND — RZ1042A20
INPUT — RZ1010B20
+28V DC IN — RZ1044B20
OUTPUT — RZ1012B20
A B C D
PILOT'S
MIXER AMPLIFIER

3.2.0-10-118

15–13. TROUBLESHOOTING AN/AIC-8. (See figures 15–4 and 15–5.)

SYMPTOM	FUNCTIONAL LOOP	KEY TEST POINTS
Entire set inoperative.	D-C power.	1, 2, 3, and 4
One master control or jack box does not operate.	Power.	2, 3, and 4
No volume control on one control unit.	AF amplifier.	
No call facilities on one control unit.	Microphone.	
No listen facilities at one master or interphone station.	Headset.	

SECTION XVI

INTERCOMMUNICATION SET AN/AIC-10

16–1. DESCRIPTION AND LEADING PARTICULARS.

16–2. This section comprises maintenance instructions for intercommunication set AN/AIC-10, installed in SA-16A and SA-16B aircraft. (See figure 16–1.) The set provides intercommunication facilities within the aircraft and between all crew member stations. Voice communication outside the aircraft is accomplished by using the set in conjunction with any one of the several radio-transmitter systems. Provision is made for crew members to monitor one or more channels simultaneously by use of the intercommunication set. Each crew member may interrupt any radio signal on the communication channel for purpose of intercommunication. Principal components of the set are four master control panels, four auxiliary control panels, four filters, three interphone controls, two dynamotors, and eight headset-microphones.

16–3. The normal and auxiliary listen channels are series, talk-listen circuits between a centrally located radio junction box and each master control panel and interphone control of the system. On normal channel, a three-stage audio amplifier, located in each master control panel and each interphone control, amplifies audio signals and provides for volume control. Plate voltage for the amplifier tubes is furnished by two dynamotors, each serving approximately half of the amplifiers. On the auxiliary listen channel the amplifiers are bypassed for emergency operation. Monitor channels are series-listen channels between a centrally located radio junction box and each master control panel switches are provided for channel selection. Figure 16–2 illustrates complete system data flow.

16–4. MASTER CONTROL PANEL C-824/AIC-10. (See figure 16–3.) The master control panel provides the operator with functional and channel selection over the intercommunication set. There are four master control panels in the aircraft, one each for the pilot, copilot, radio operator, and radar-navigator. A microphone, press-to-talk switch, located on the pilot's and copilot's control wheels provides talk-and-listen function for the channel selected. Microphone foot switches are provided for this purpose at the radio operator's and radar-navigator's station. The panel contains a six-position, microphone selector switch, a normal-auziliary listen switch, a volume control, and a three-stage audio amplifier. The microphone selector switch is labeled VHF, COMM, LIA UHF COMM, and INTER. Included is a CALL position to enable any of these four stations to call all other stations, including the three interphone controls, by voice communication, regardless ot the setting of microphone or audio selector switches at the other stations. Five audio switches are installed on the master control panel to provide selection of interphone, UHF communication, liaison, ADF and VHF communication.

16–5. AUXILIARY CONTROL PANEL C-826/AIC-10. (See figure 16–3.) An auxiliary control panel is used with each master control panel to provide audio selector switches for marker, range, VHF navigation, and two spares.

16–6. FILTER F-90/AIC. (See figure 16–3.) The filter F-90/AIC, filters signals received from the radio compass before the signals are applied to the intercommunication set. The filter contains a selector switch. There are four filters in the aircraft, one located adjacent to each master control panel.

16–7. INTERPHONE CONTROL C-821/AIC-10. (See figure 16–3.) The interphone control panel provides facilities for inter-aircraft voice communication only. The interphone control contains a call switch, a normal-auxiliary listen switch safety wired to NORM, a volume control, and a three-stage audio amplifier. There are three interphone controls in the aircraft, one in the bow compartment and one each at the right-hand and left-hand observer's stations.

16–8. DYNAMOTOR DY-77/AIC-10. (See figure 16–3.) Dynamotor DY-77/AIC-10 is used to supply voltage to the master control panels at the pilot's and radio operator's station and the left-hand observer's interphone control. The dynamotor receives power from the aircraft 28-volt D-C system. The dynamotor output is 170 volts D-C for plate voltage in the audio frequency amplifiers.

16–9. DYNAMOTOR DY-76/AIC-10. (See figure 16–3.) Dynamotor DY-76/AIC-10 is used to supply voltage to the master controls at the copilot's and radar-navigator's stations and the right-hand observer's interphone control. The dynamotor receives power from the aircraft 28-volt D-C system. The output of the dynamotor is 170 volts D-C for plate voltage in the audio frequency amplifiers.

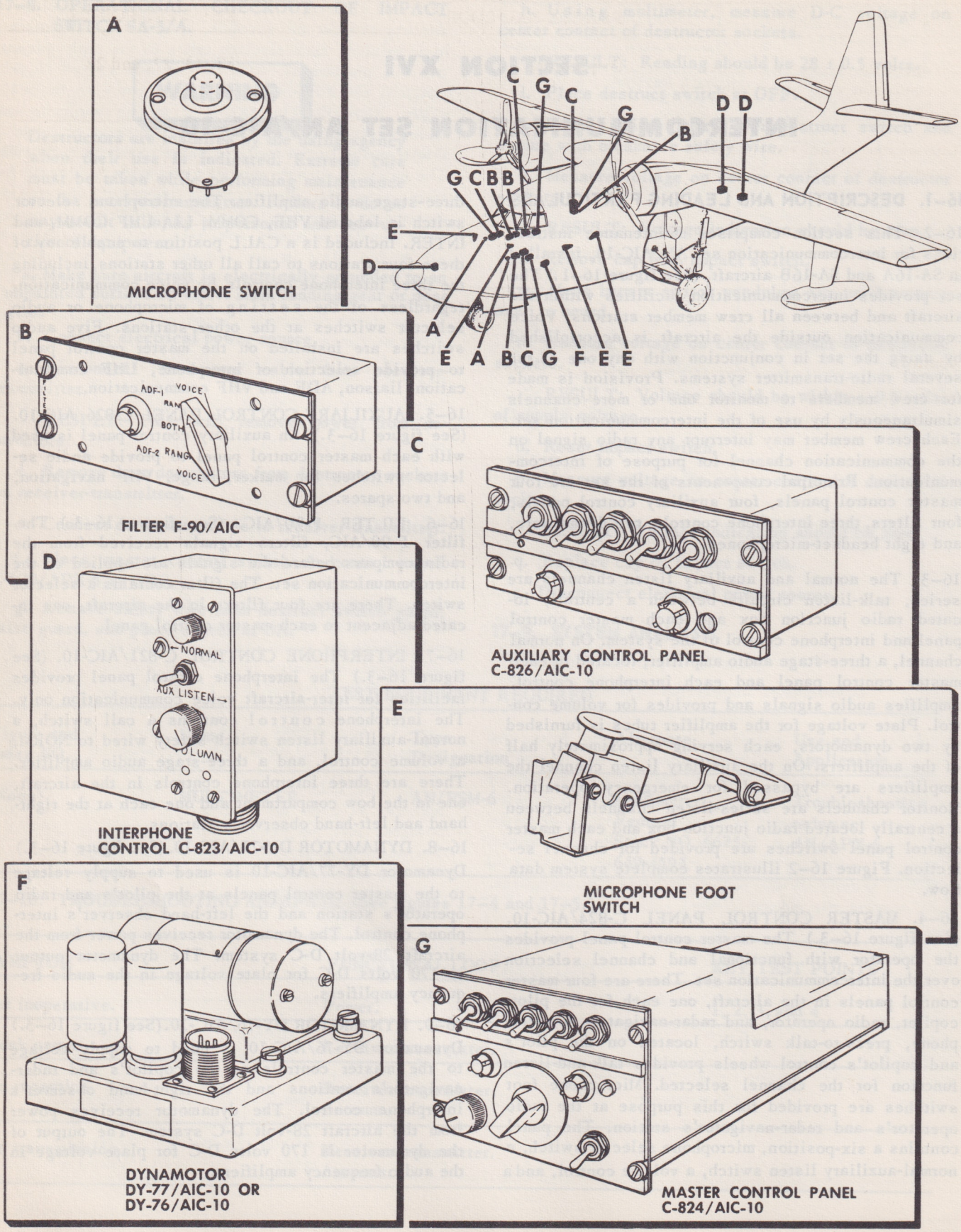

Figure 16–1. Intercommunication Set AN/AIC-10 Component Locations

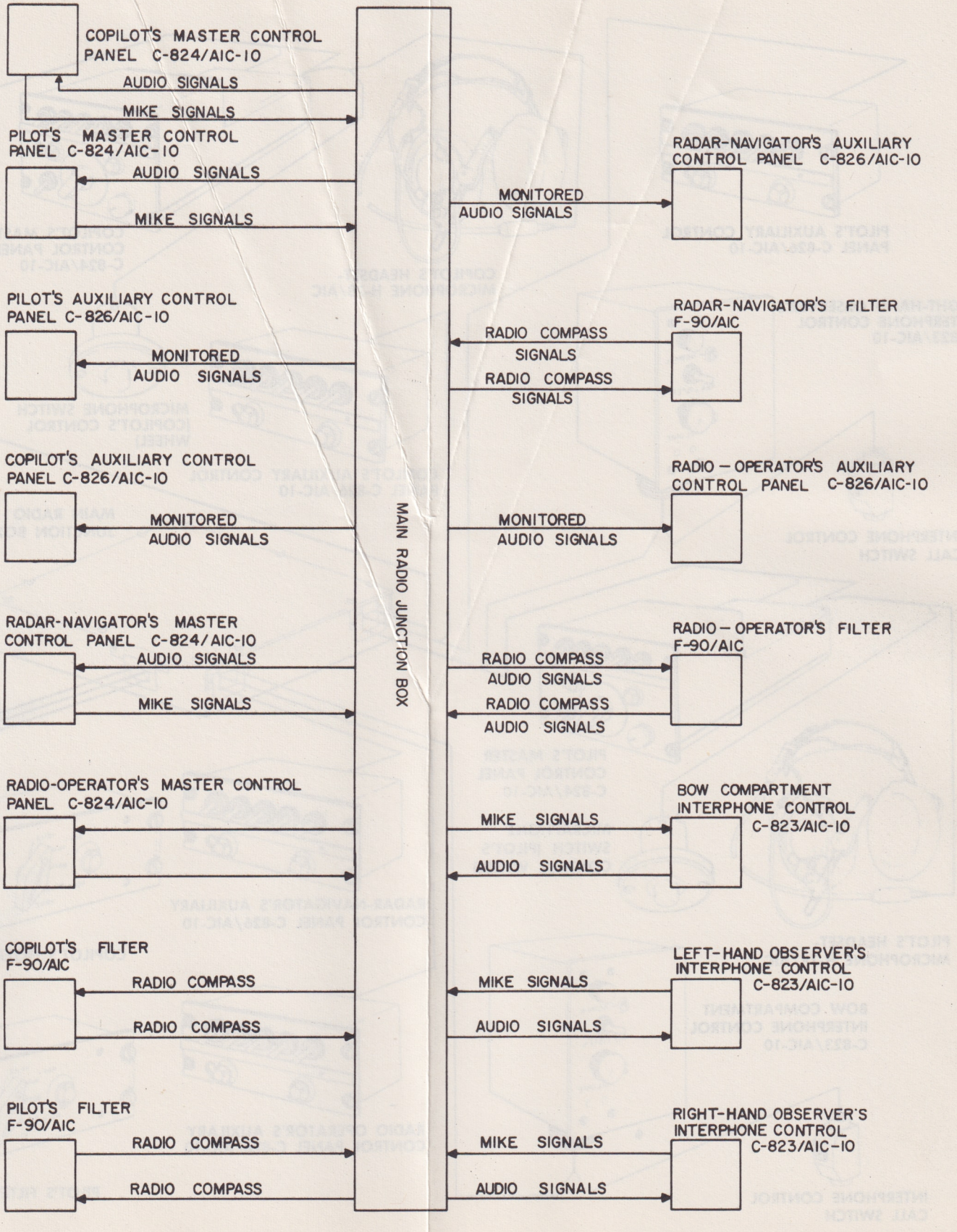

Figure 16-2. Intercommunication Set AN/AIC-10 Complete Functional Data Flow

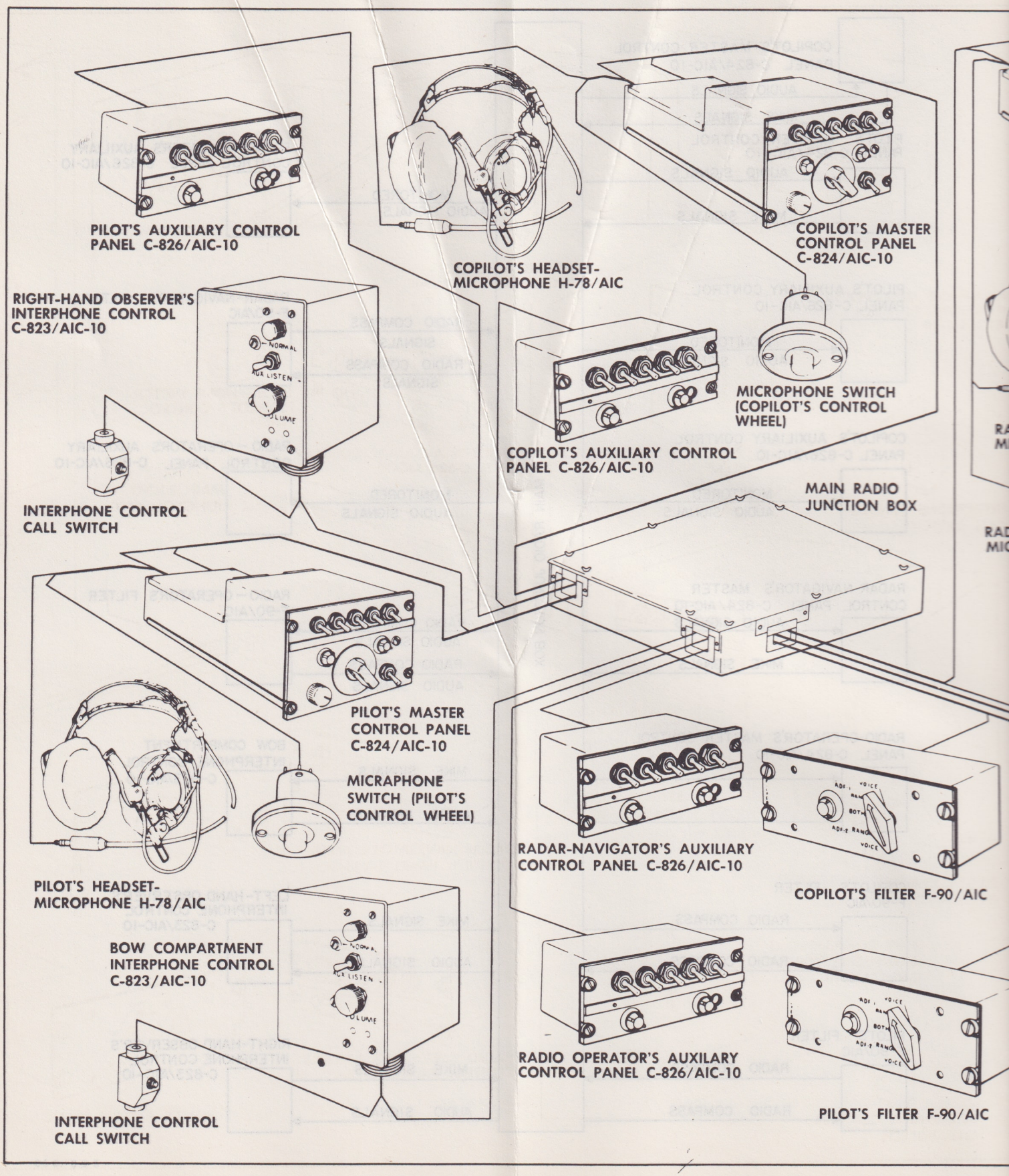
PILOT'S AUXILIARY CONTROL PANEL C-826/AIC-10
COPILOT'S HEADSET-MICROPHONE H-78/AIC
COPILOT'S MASTER CONTROL PANEL C-824/AIC-10
RIGHT-HAND OBSERVER'S INTERPHONE CONTROL C-823/AIC-10
NORMAL
AUX LISTEN
VOLUME
MICROPHONE SWITCH (COPILOT'S CONTROL WHEEL)
COPILOT'S AUXILIARY CONTROL PANEL C-826/AIC-10
INTERPHONE CONTROL CALL SWITCH
MAIN RADIO JUNCTION BOX
PILOT'S MASTER CONTROL PANEL C-824/AIC-10
MICRAPHONE SWITCH (PILOT'S CONTROL WHEEL)
RADAR-NAVIGATOR'S AUXILIARY CONTROL PANEL C-826/AIC-10
COPILOT'S FILTER F-90/AIC
PILOT'S HEADSET-MICROPHONE H-78/AIC
BOW COMPARTMENT INTERPHONE CONTROL C-823/AIC-10
RADIO OPERATOR'S AUXILARY CONTROL PANEL C-826/AIC-10
PILOT'S FILTER F-90/AIC
INTERPHONE CONTROL CALL SWITCH

Figure 16–3.

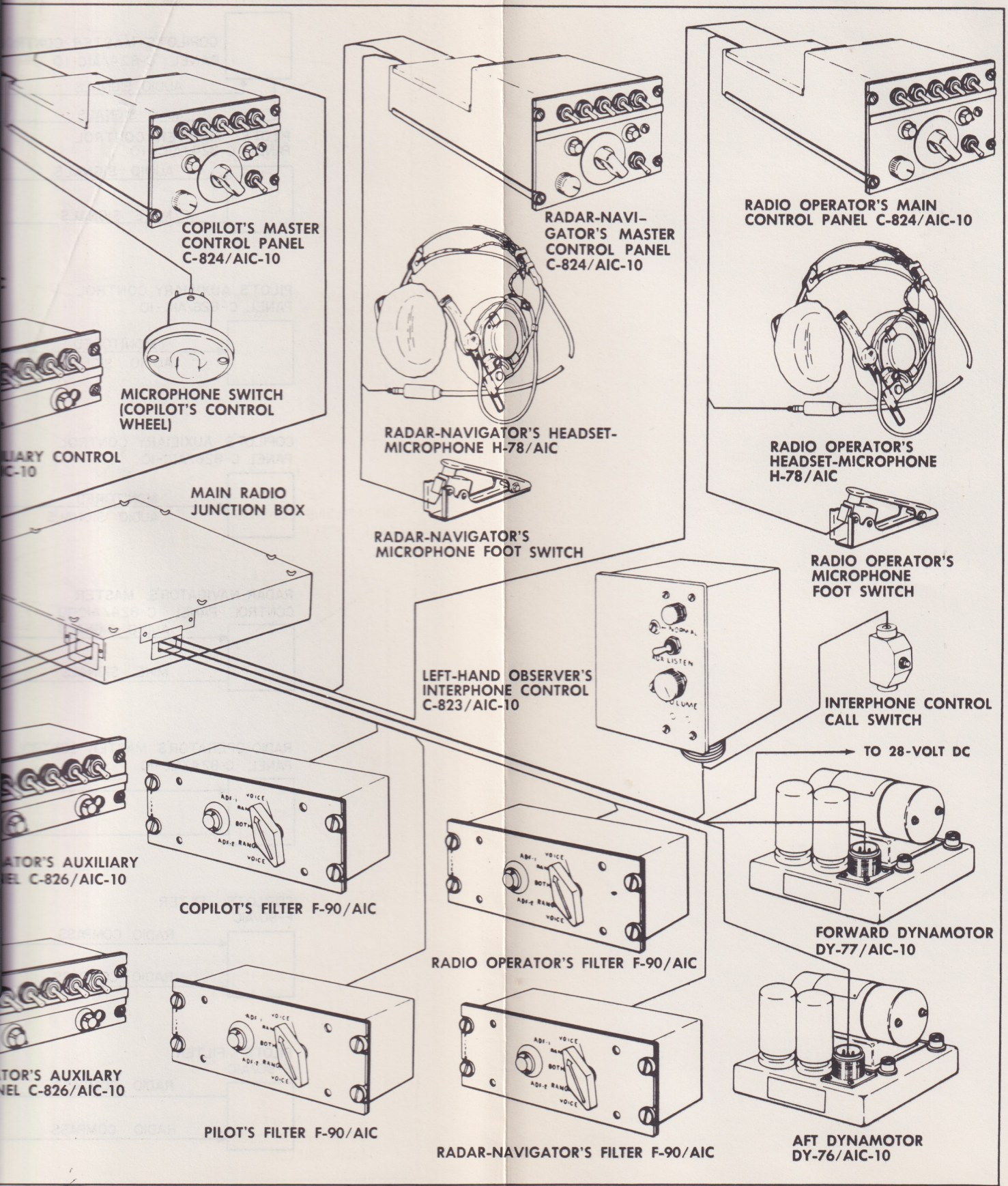

Figure 16–3. Intercommunication Set AN/AIC-10 Cabling Diagram

3.2.0-10-40

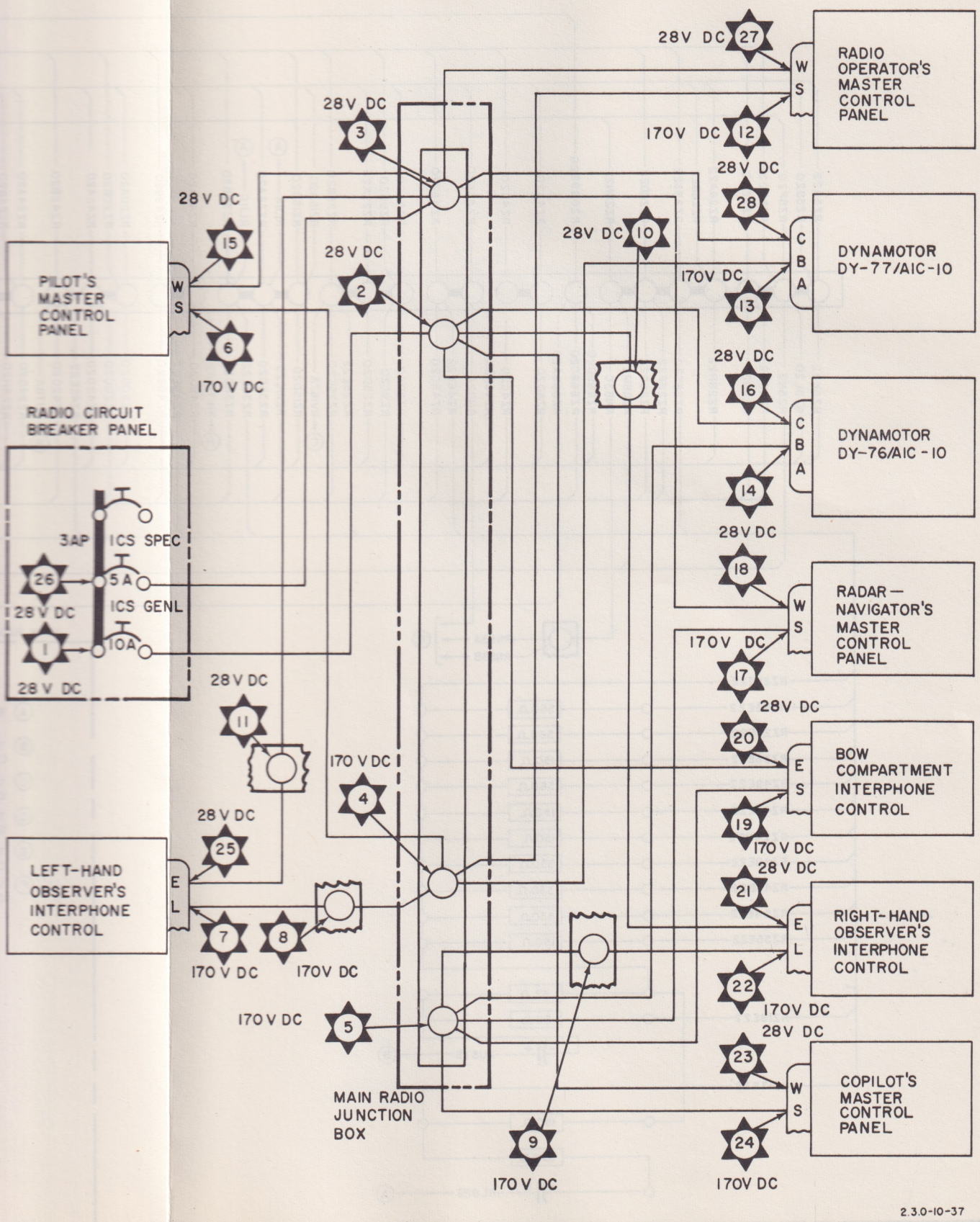

Figure 16–4. Intercommunication Set AN/AIC-10 Power Distribution, Connection to Aircraft

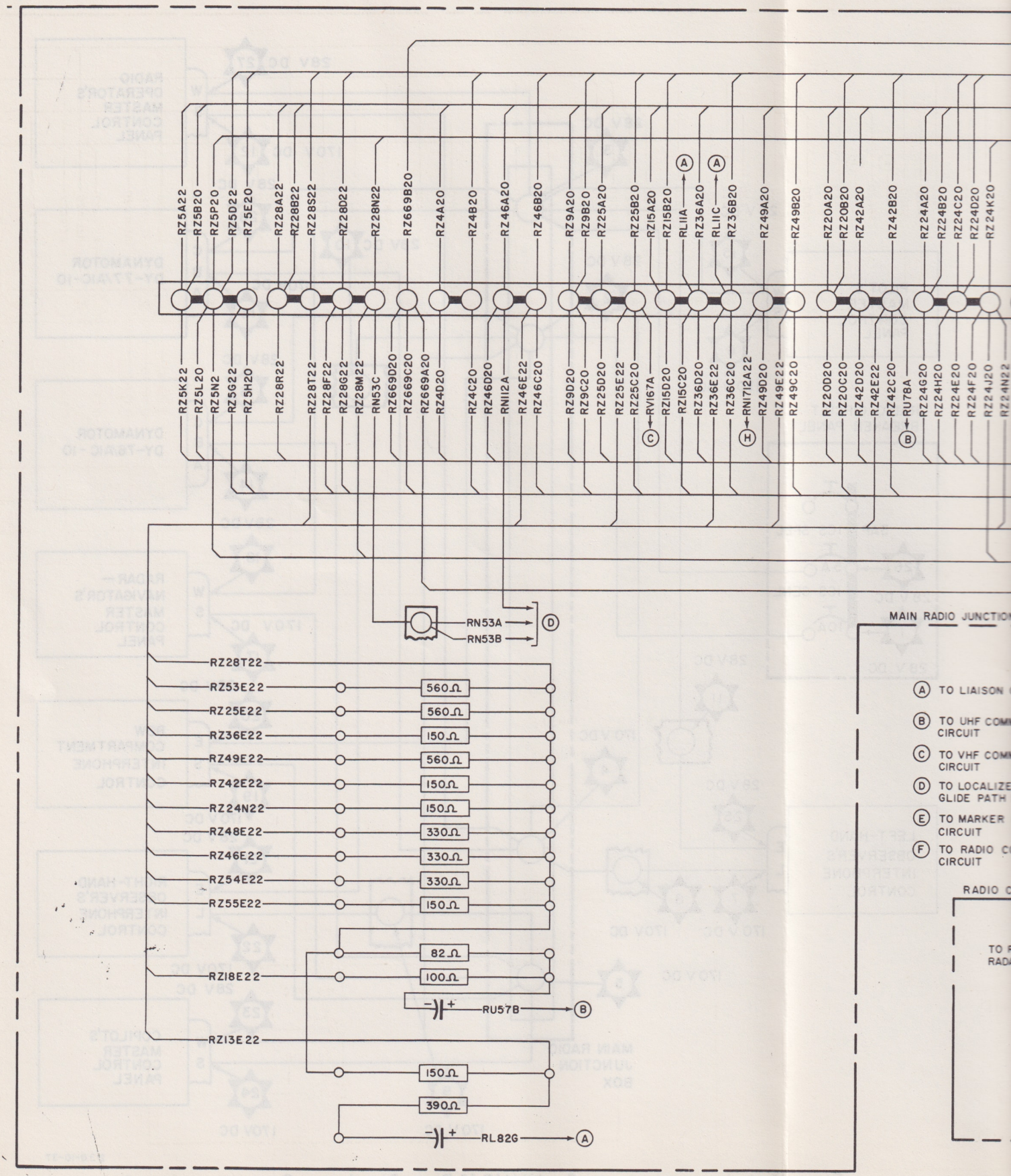
RZ5A22
RZ5B20
RZ5P20
RZ5D22
RZ5E20
RZ28A22
RZ28B22
RZ28S22
RZ28D22
RZ28N22
RZ669B20
RZ4A20
RZ4B20
RZ46A20
RZ46B20
RZ9A20
RZ9B20
RZ25A20
RZ25B20
RZI5A20
RZI5B20
RLIIA
RZ36A20
RLIIC
RZ36B20
RZ49A20
RZ49B20
RZ20A20
RZ20B20
RZ42A20
RZ42B20
RZ24A20
RZ24B20
RZ24C20
RZ24D20
RZ24K20
RZ5K22
RZ5L20
RZ5N2
RZ5G22
RZ5H20
RZ28R22
RZ28T22
RZ28F22
RZ28G22
RZ28M22
RN53C
RZ669D20
RZ669C20
RZ669A20
RZ4D20
RZ4C20
RZ46D20
RNII2A
RZ46E22
RZ46C20
RZ9D20
RZ9C20
RZ25D20
RZ25E22
RZ25C20
RVI67A
RZI5D20
RZI5C20
RZ36D20
RZ36E22
RZ36C20
RNI7I2A22
RZ49D20
RZ49E22
RZ49C20
RZ20D20
RZ20C20
RZ42D20
RZ42E22
RZ42C20
RU78A
RZ24G20
RZ24H20
RZ24E20
RZ24F20
RZ24J20
RZ24N22
RN53A
RN53B
D
RZ28T22
RZ53E22
560Ω
RZ25E22
560Ω
RZ36E22
150Ω
RZ49E22
560Ω
RZ42E22
150Ω
RZ24N22
150Ω
RZ48E22
330Ω
RZ46E22
330Ω
RZ54E22
330Ω
RZ55E22
150Ω
82Ω
RZI8E22
100Ω
RU57B
B
RZI3E22
150Ω
390Ω
RL82G
A
MAIN RADIO JUNCTION
A TO LIAISON
B TO UHF COMM CIRCUIT
C TO VHF COMM CIRCUIT
D TO LOCALIZE GLIDE PATH
E TO MARKER CIRCUIT
F TO RADIO C CIRCUIT
RADIO C
TO R RADA

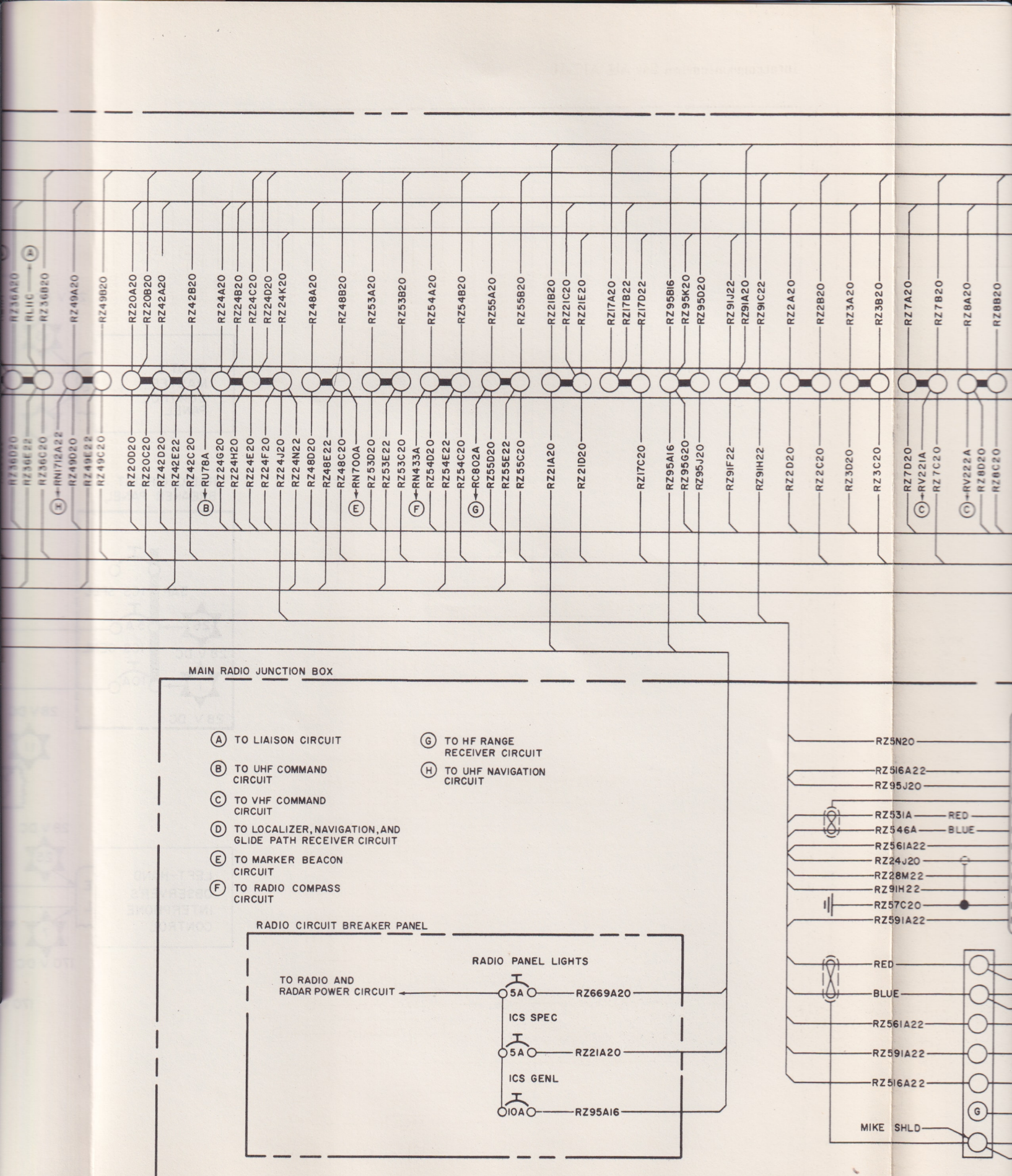
MAIN RADIO JUNCTION BOX
A TO LIAISON CIRCUIT
B TO UHF COMMAND CIRCUIT
C TO VHF COMMAND CIRCUIT
D TO LOCALIZER, NAVIGATION, AND GLIDE PATH RECEIVER CIRCUIT
E TO MARKER BEACON CIRCUIT
F TO RADIO COMPASS CIRCUIT
G TO HF RANGE RECEIVER CIRCUIT
H TO UHF NAVIGATION CIRCUIT
RADIO CIRCUIT BREAKER PANEL
RADIO PANEL LIGHTS
TO RADIO AND RADAR POWER CIRCUIT
5A
RZ669A20
ICS SPEC
5A
RZ21A20
ICS GENL
10A
RZ95A16
RZ5N20
RZ5I6A22
RZ95J20
RZ53IA
RED
RZ546A
BLUE
RZ56IA22
RZ24J20
RZ28M22
RZ9IH22
RZ57C20
RZ59IA22
RED
BLUE
RZ56IA22
RZ59IA22
RZ5I6A22
G
MIKE SHLD

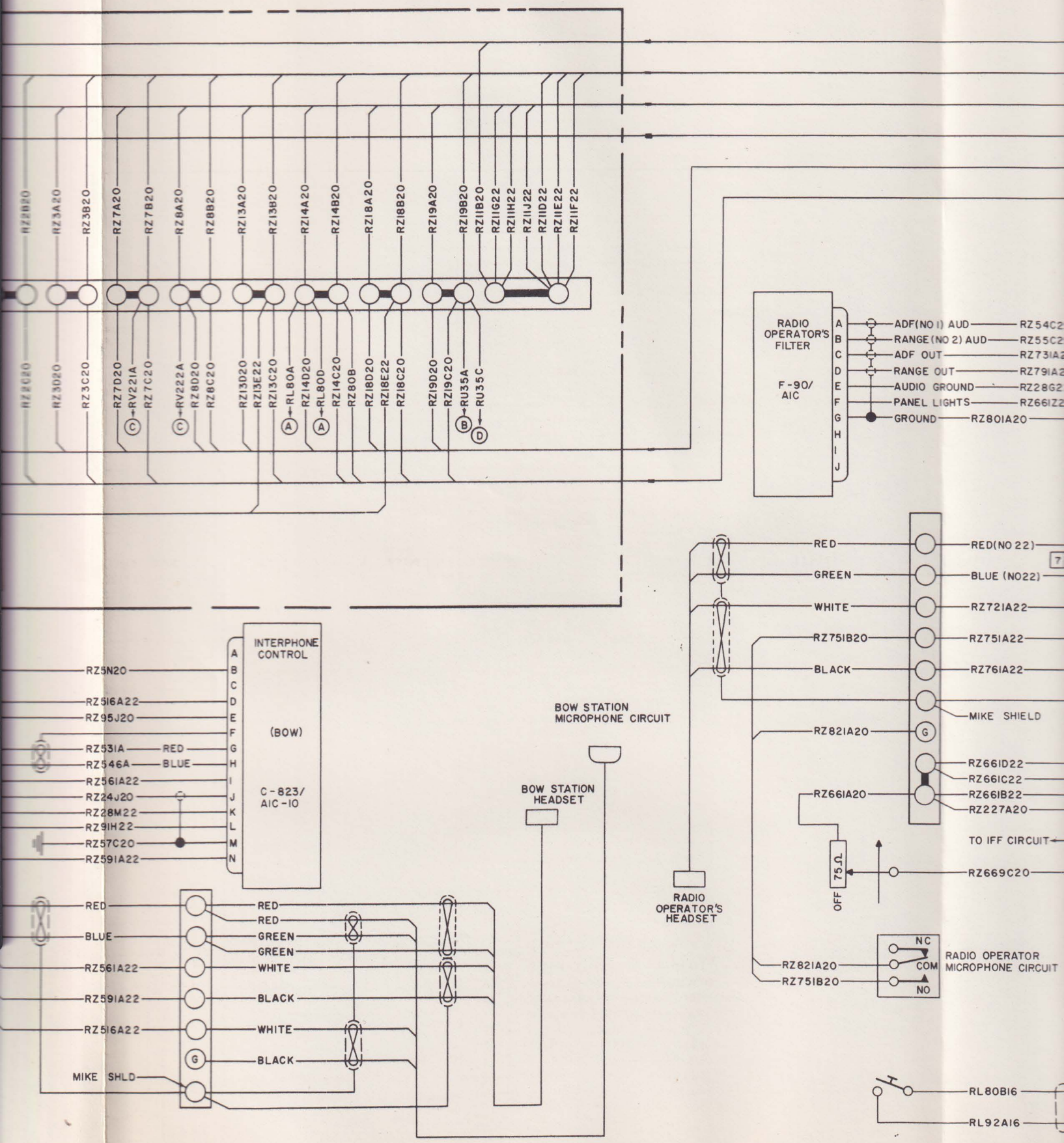
RZ2B20
RZ3A20
RZ3B20
RZ7A20
RZ7B20
RZ8A20
RZ8B20
RZI3A20
RZI3B20
RZI4A20
RZI4B20
RZI8A20
RZI8B20
RZI9A20
RZI9B20
RZIIB20
RZIIG22
RZIIH22
RZIIJ22
RZIID22
RZIIE22
RZIIF22
RZ2C20
RZ3D20
RZ3C20
RZ7D20
RV221A
RZ7C20
RV222A
RZ8D20
RZ8C20
RZI3D20
RZI3E22
RZI3C20
RL80A
RZI4D20
RL80D
RZI4C20
RZ80B
RZI8D20
RZI8E22
RZI8C20
RZI9D20
RZI9C20
RU35A
RU35C
RADIO OPERATOR'S FILTER
F-90/ AIC
A ADF(NO 1) AUD RZ54C2
B RANGE(NO 2) AUD RZ55C2
C ADF OUT RZ731A2
D RANGE OUT RZ791A2
E AUDIO GROUND RZ28G2
F PANEL LIGHTS RZ661Z2
G GROUND RZ801A20
H
I
J
RED
GREEN
WHITE
RZ751B20
BLACK
RED(NO 22)
BLUE (NO22)
RZ721A22
RZ751A22
RZ761A22
MIKE SHIELD
RZ821A20
RZ661D22
RZ661C22
RZ661A20
RZ661B22
RZ227A20
TO IFF CIRCUIT
75Ω
OFF
RZ669C20
INTERPHONE CONTROL
(BOW)
C-823/ AIC-10
RZ5N20
RZ516A22
RZ95J20
RZ531A RED
RZ546A BLUE
RZ561A22
RZ24J20
RZ28M22
RZ91H22
RZ57C20
RZ591A22
BOW STATION MICROPHONE CIRCUIT
BOW STATION HEADSET
RADIO OPERATOR'S HEADSET
RED
BLUE
RZ561A22
RZ591A22
RZ516A22
MIKE SHLD
RED
RED
GREEN
GREEN
WHITE
BLACK
WHITE
BLACK
NC
COM
NO
RADIO OPERATOR MICROPHONE CIRCUIT
RZ821A20
RZ751B20
RL80B16
RL92A16

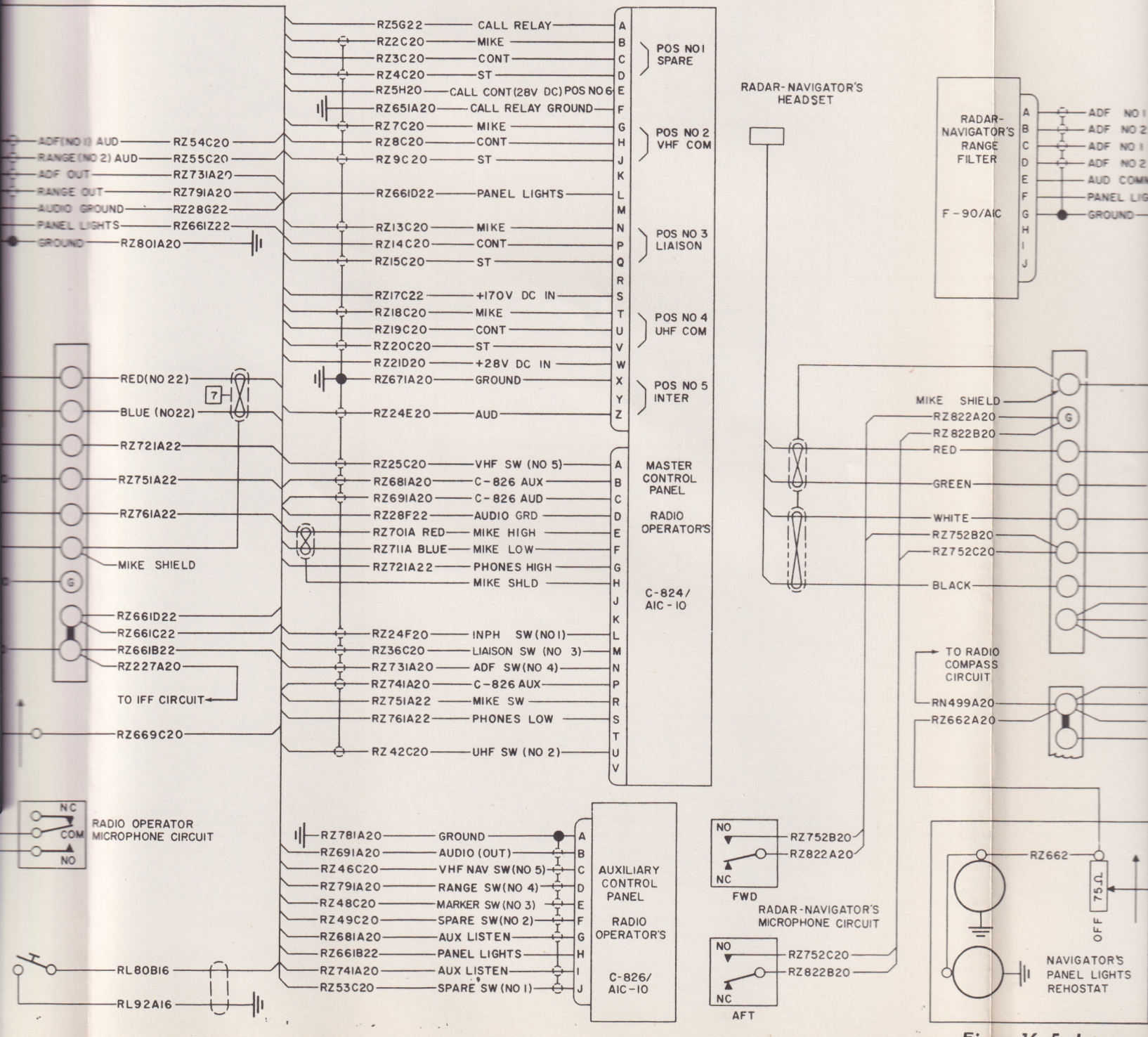

Figure 16–5. Intercom

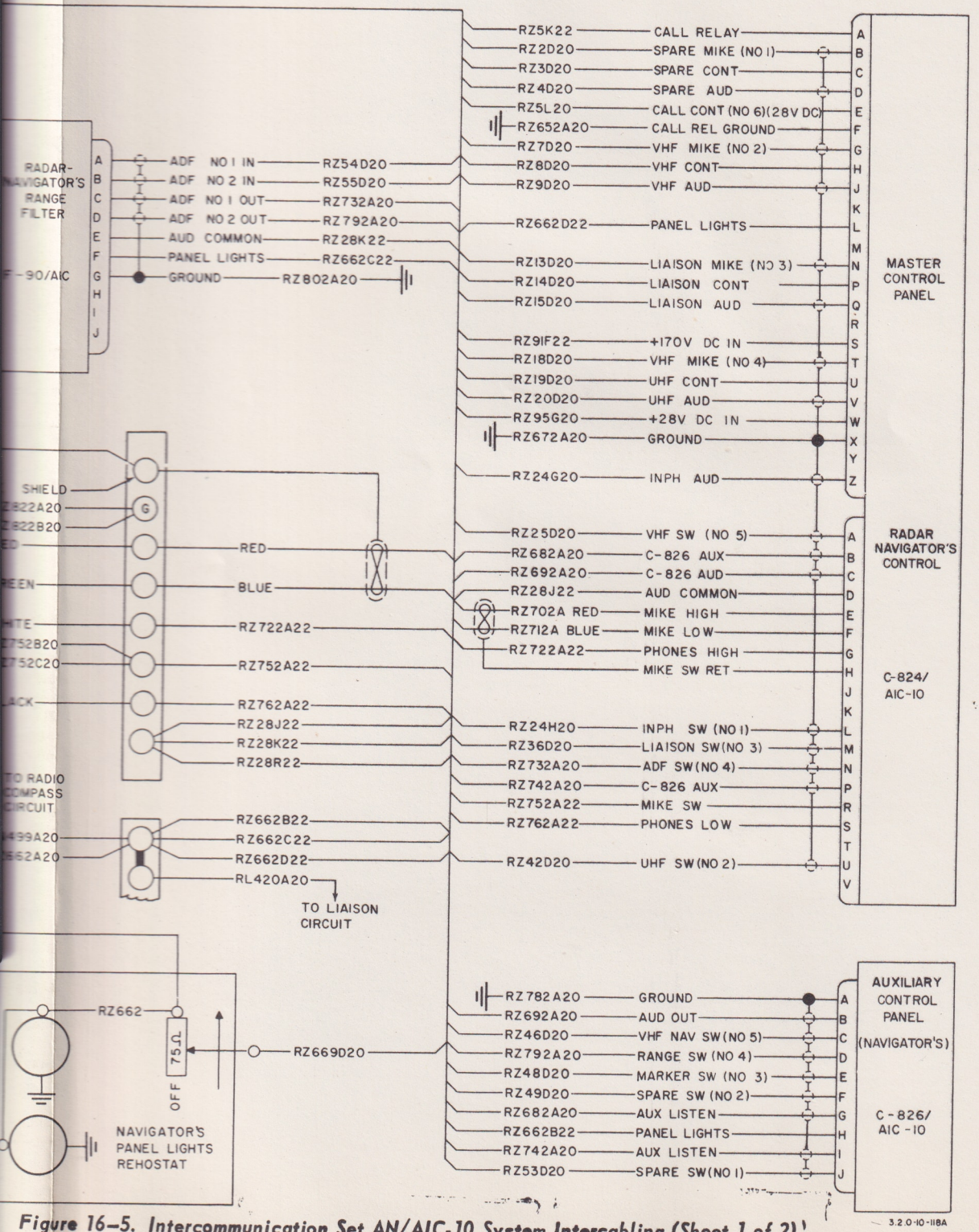

Figure 16–5. Intercommunication Set AN/AIC-10 System Intercabling (Sheet 1 of 2)

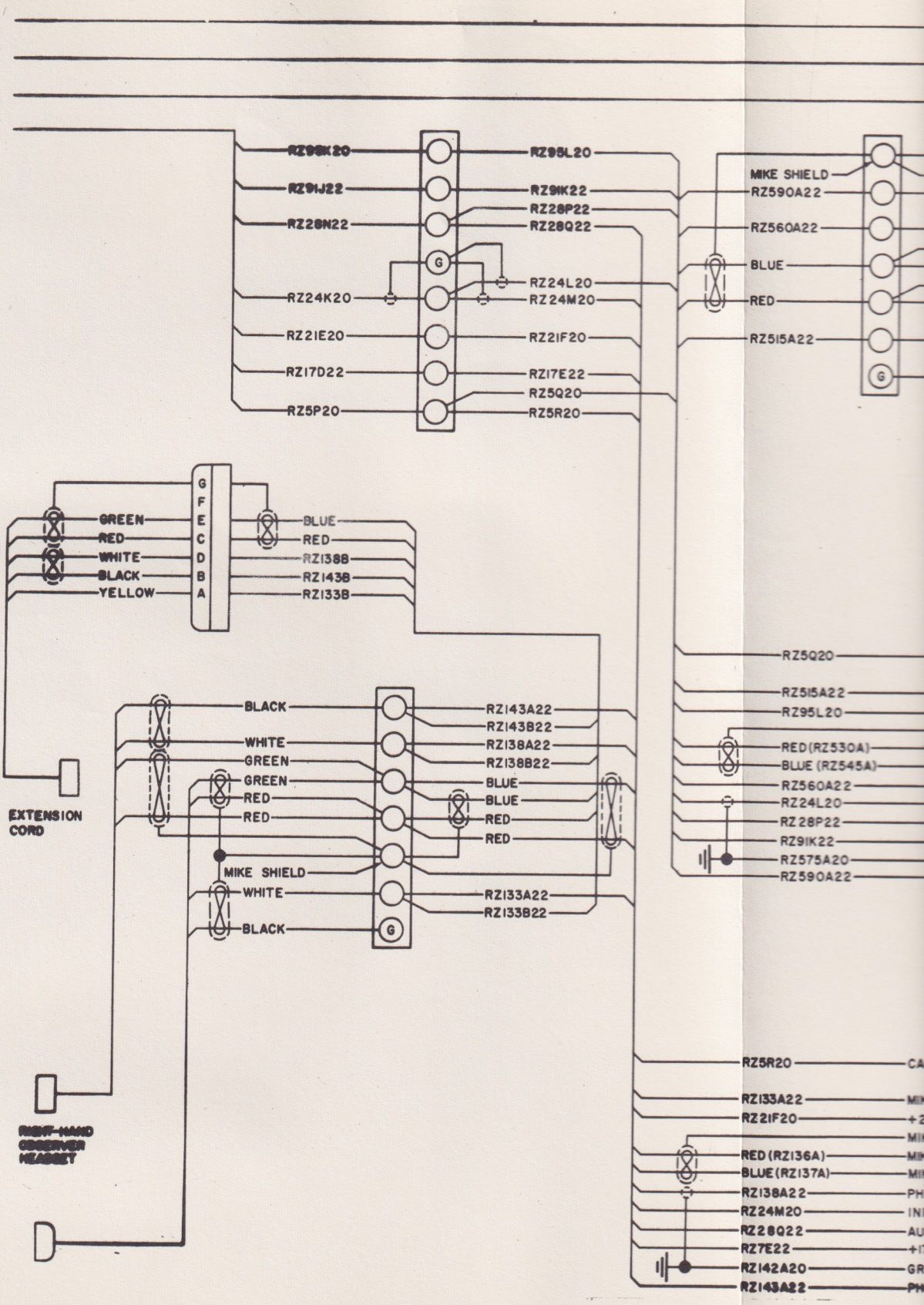

Figure 16–5. Intercommunication Set AN/AIC-10 System Interconnection (Sheet 2 of 2)

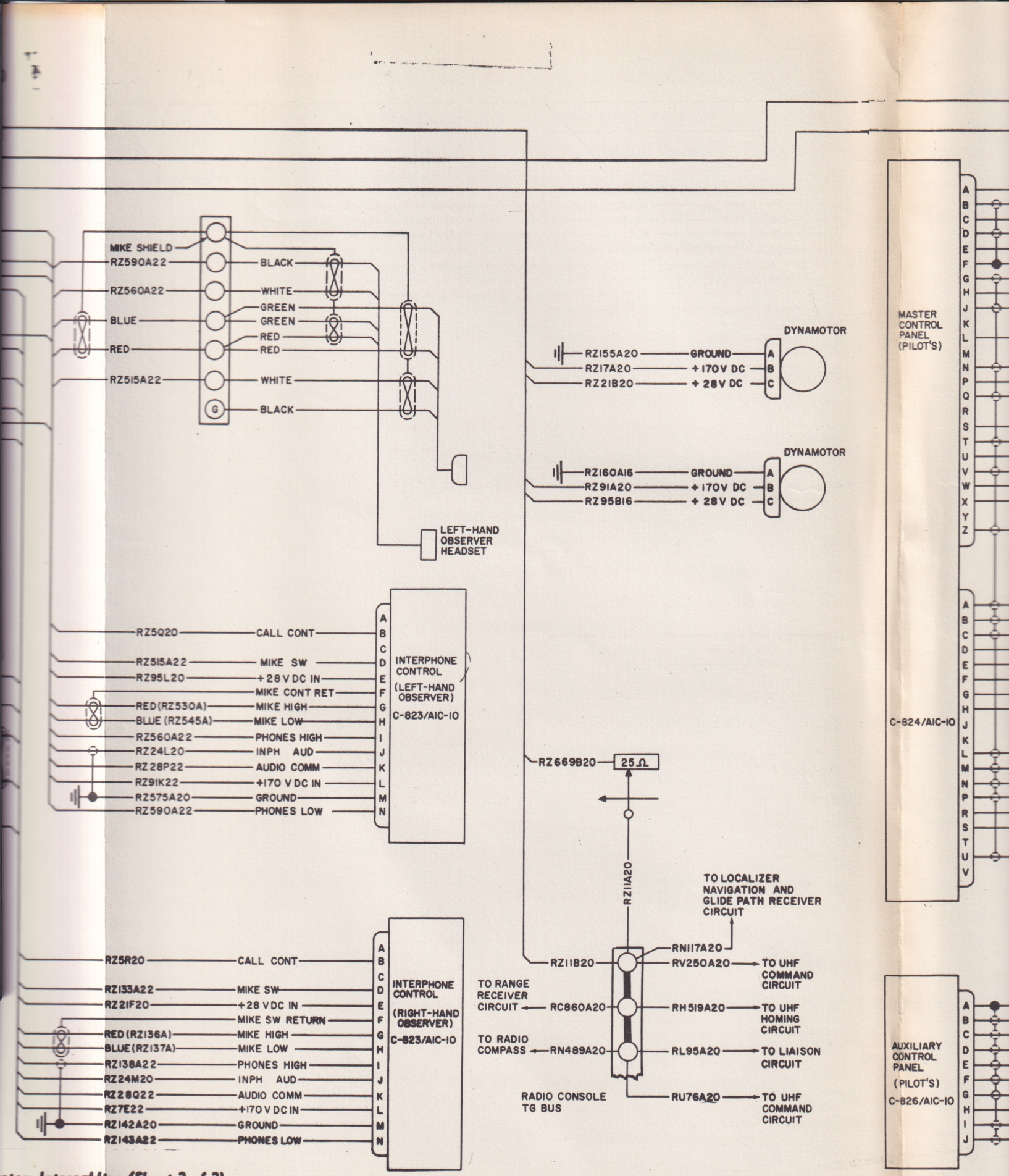

stem Interconnecting (Sheet 2 of 2)

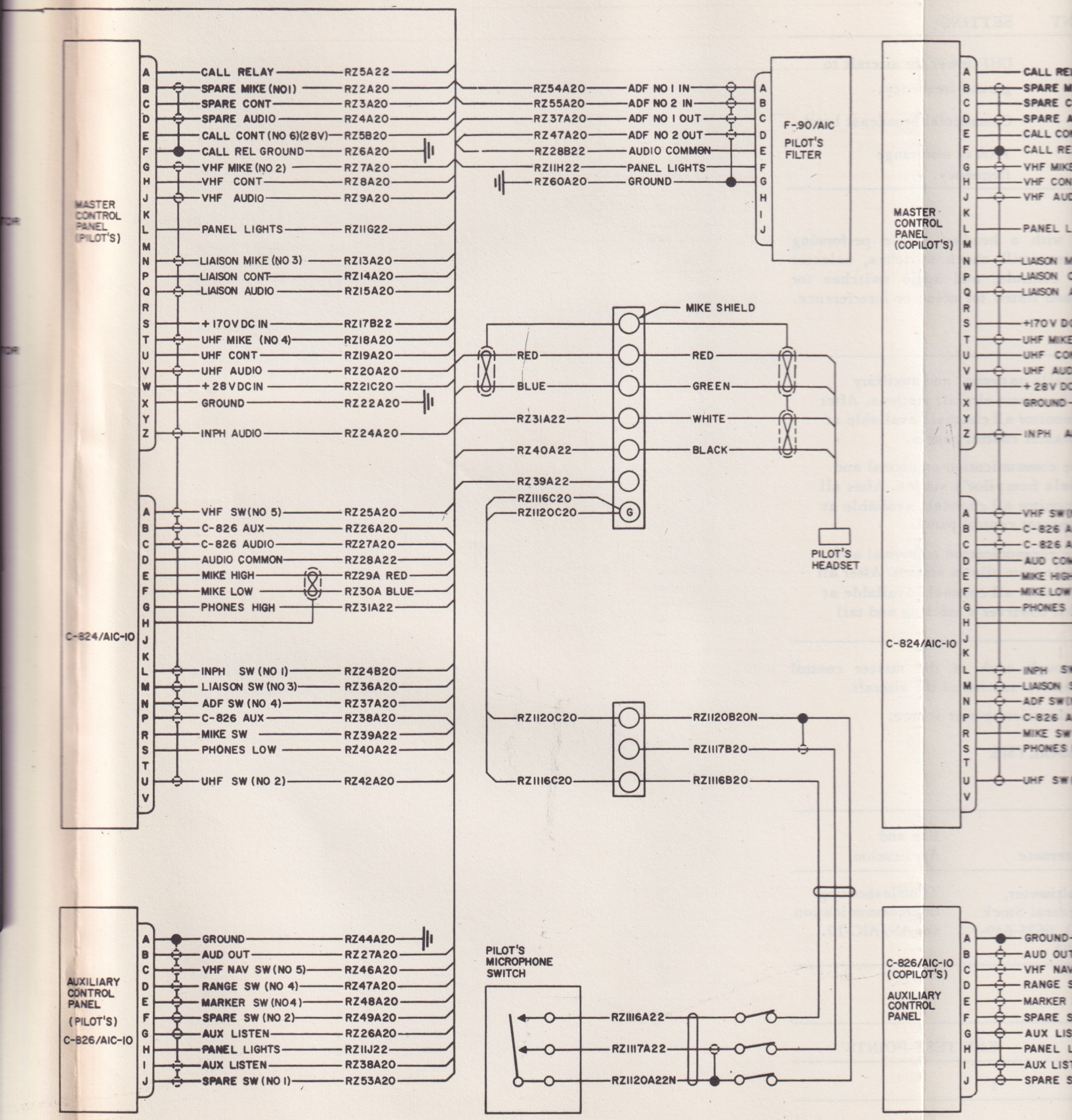
MASTER CONTROL PANEL (PILOT'S)
A CALL RELAY RZ5A22
B SPARE MIKE (NO1) RZ2A20
C SPARE CONT RZ3A20
D SPARE AUDIO RZ4A20
E CALL CONT (NO 6)(28V) RZ5B20
F CALL REL GROUND RZ6A20
G VHF MIKE (NO 2) RZ7A20
H VHF CONT RZ8A20
J VHF AUDIO RZ9A20
K
L PANEL LIGHTS RZ11G22
M
N LIAISON MIKE (NO 3) RZ13A20
P LIAISON CONT RZ14A20
Q LIAISON AUDIO RZ15A20
R
S +170V DC IN RZ17B22
T UHF MIKE (NO 4) RZ18A20
U UHF CONT RZ19A20
V UHF AUDIO RZ20A20
W +28V DC IN RZ21C20
X GROUND RZ22A20
Y
Z INPH AUDIO RZ24A20
C-824/AIC-10
A VHF SW (NO 5) RZ25A20
B C-826 AUX RZ26A20
C C-826 AUDIO RZ27A20
D AUDIO COMMON RZ28A22
E MIKE HIGH RZ29A RED
F MIKE LOW RZ30A BLUE
G PHONES HIGH RZ31A22
H
J
K
L INPH SW (NO 1) RZ24B20
M LIAISON SW (NO 3) RZ36A20
N ADF SW (NO 4) RZ37A20
P C-826 AUX RZ38A20
R MIKE SW RZ39A22
S PHONES LOW RZ40A22
T
U UHF SW (NO 2) RZ42A20
V
RZ54A20 ADF NO 1 IN
RZ55A20 ADF NO 2 IN
RZ37A20 ADF NO 1 OUT
RZ47A20 ADF NO 2 OUT
RZ28B22 AUDIO COMMON
RZ11H22 PANEL LIGHTS
RZ60A20 GROUND
A B C D E F G H I J
F-90/AIC PILOT'S FILTER
MIKE SHIELD
RED RED
BLUE GREEN
RZ31A22 WHITE
RZ40A22 BLACK
RZ39A22
RZ111 6C20
RZ112 0C20
G
PILOT'S HEADSET
RZ112 0C20 RZ112 0B20N
RZ111 7B20
RZ111 6C20 RZ111 6B20
MASTER CONTROL PANEL (COPILOT'S)
CALL RE
SPARE M
SPARE C
SPARE A
CALL CO
CALL RE
VHF MIKE
VHF CON
VHF AUD
PANEL L
LIAISON M
LIAISON C
LIAISON A
+170V DC
UHF MIKE
UHF CO
UHF AUD
+28V DC
GROUND
INPH A
C-824/AIC-10
VHF SW (
C-826 A
C-826 A
AUD CO
MIKE HIG
MIKE LOW
PHONES
INPH SW
LIAISON S
ADF SW (
C-826 A
MIKE SW
PHONES
UHF SW
AUXILIARY CONTROL PANEL (PILOT'S) C-826/AIC-10
A GROUND RZ44A20
B AUD OUT RZ27A20
C VHF NAV SW (NO 5) RZ46A20
D RANGE SW (NO 4) RZ47A20
E MARKER SW (NO4) RZ48A20
F SPARE SW (NO 2) RZ49A20
G AUX LISTEN RZ26A20
H PANEL LIGHTS RZ11J22
I AUX LISTEN RZ38A20
J SPARE SW (NO 1) RZ53A20
PILOT'S MICROPHONE SWITCH
RZ111 6A22
RZ111 7A22
RZ112 0A22N
C-826/AIC-10 (COPILOT'S) AUXILIARY CONTROL PANEL
GROUND
AUD OUT
VHF NAV
RANGE S
MARKER
SPARE S
AUX LIS
PANEL L
AUX LIST
SPARE S

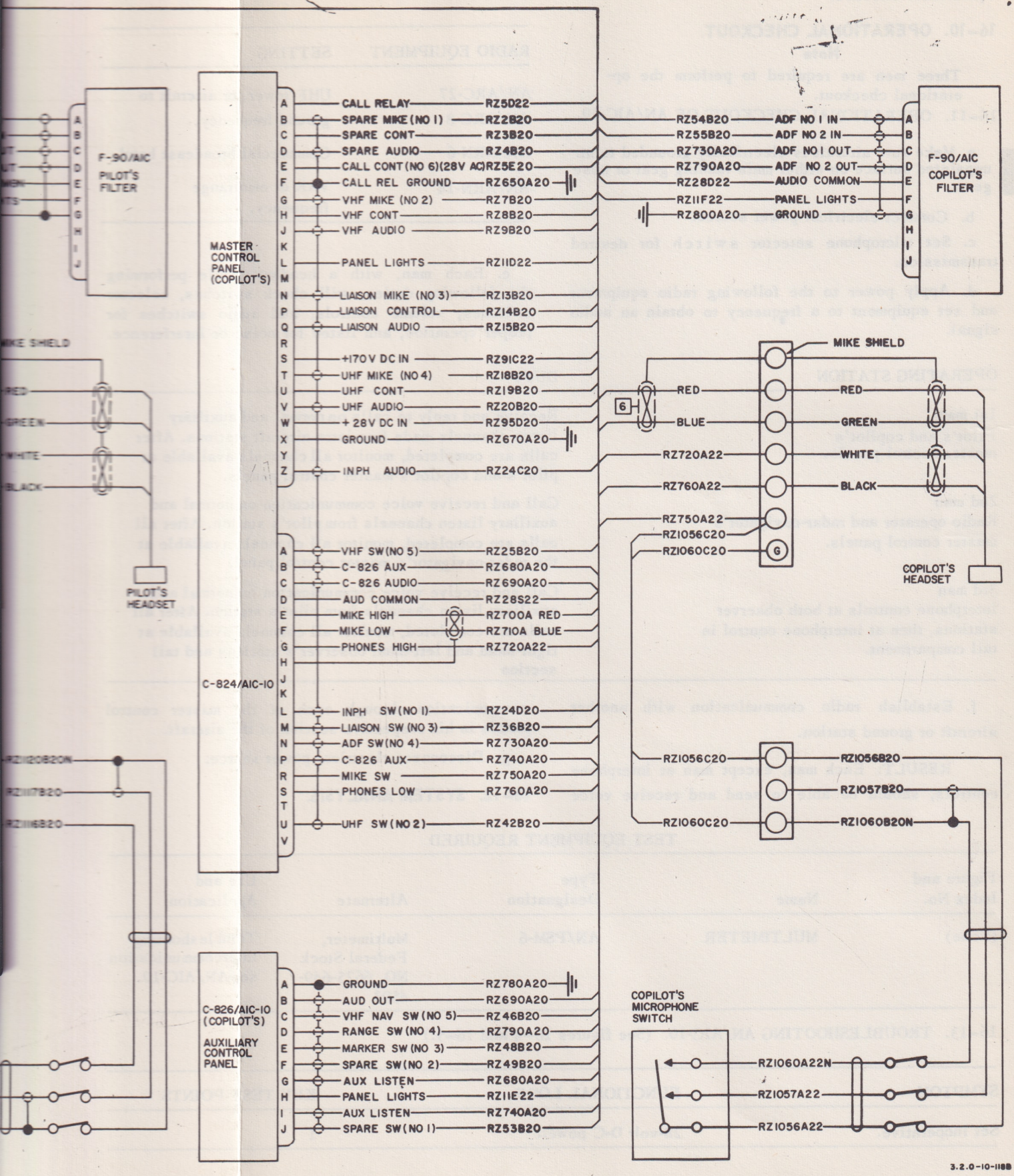
F-90/AIC PILOT'S FILTER
MASTER CONTROL PANEL (COPILOT'S)
A CALL RELAY RZ5D22
B SPARE MIKE (NO 1) RZ2B20
C SPARE CONT RZ3B20
D SPARE AUDIO RZ4B20
E CALL CONT (NO 6)(28V AC) RZ5E20
F CALL REL GROUND RZ650A20
G VHF MIKE (NO 2) RZ7B20
H VHF CONT RZ8B20
J VHF AUDIO RZ9B20
L PANEL LIGHTS RZIID22
N LIAISON MIKE (NO 3) RZI3B20
P LIAISON CONTROL RZI4B20
Q LIAISON AUDIO RZI5B20
S +170V DC IN RZ9IC22
T UHF MIKE (NO 4) RZI8B20
U UHF CONT RZI9B20
V UHF AUDIO RZ20B20
W +28V DC IN RZ95D20
X GROUND RZ670A20
Z INPH AUDIO RZ24C20
RZ54B20 ADF NO 1 IN
RZ55B20 ADF NO 2 IN
RZ730A20 ADF NO 1 OUT
RZ790A20 ADF NO 2 OUT
RZ28D22 AUDIO COMMON
RZIIF22 PANEL LIGHTS
RZ800A20 GROUND
F-90/AIC COPILOT'S FILTER
MIKE SHIELD
RED
GREEN
WHITE
BLACK
PILOT'S HEADSET
COPILOT'S HEADSET
RZ720A22
RZ760A22
RZ750A22
RZI056C20
RZI060C20
C-824/AIC-10
A VHF SW (NO 5) RZ25B20
B C-826 AUX RZ680A20
C C-826 AUDIO RZ690A20
D AUD COMMON RZ28S22
E MIKE HIGH RZ700A RED
F MIKE LOW RZ710A BLUE
G PHONES HIGH RZ720A22
L INPH SW (NO 1) RZ24D20
M LIAISON SW (NO 3) RZ36B20
N ADF SW (NO 4) RZ730A20
P C-826 AUX RZ740A20
R MIKE SW RZ750A20
S PHONES LOW RZ760A20
U UHF SW (NO 2) RZ42B20
RZI056B20
RZI057B20
RZI060B20N
C-826/AIC-10 (COPILOT'S) AUXILIARY CONTROL PANEL
A GROUND RZ780A20
B AUD OUT RZ690A20
C VHF NAV SW (NO 5) RZ46B20
D RANGE SW (NO 4) RZ790A20
E MARKER SW (NO 3) RZ48B20
F SPARE SW (NO 2) RZ49B20
G AUX LISTEN RZ680A20
H PANEL LIGHTS RZIIE22
I AUX LISTEN RZ740A20
J SPARE SW (NO 1) RZ53B20
COPILOT'S MICROPHONE SWITCH
RZI060A22N
RZI057A22
RZI056A22
3.2.0-10-118B

16–10. OPERATIONAL CHECKOUT.

Note

Three men are required to perform the operational checkout.

16–11. OPERATIONAL CHECKOUT OF AN/AIC-10.

a. Make sure aircraft is electrically grounded to an unpainted surface on either main landing gear or nose gear.

b. Connect electrical power source.

c. Set microphone selector switch for desired transmission.

d. Apply power to the following radio equipment and set equipment to a frequency to obtain an audio signal.

RADIO EQUIPMENT	SETTING
AN/ARC-27 AN/ARC-8	UHF tower, or aircraft to ground frequency.
AN/ARN-6	Commercial broadcast band.
AN/ARN-14	VAR or omnirange frequency.

e. Each man, with a headset, while performing the following duties, will check switches, selector switches, volume controls, and audio switches for proper operation, and listen for noise or interference.

OPERATING STATION	DUTY
1st man Pilot's and copilot's master control panels.	Receive and reply to calls on normal and auxiliary listen channels made from intra-aircraft stations. After calls are completed, monitor all channels available at pilot's and copilot's master control panels.
2nd man Radio operator and radar-navigator's master control panels.	Call and receive voice communication on normal and auxiliary listen channels from pilot's station. After all calls are completed, monitor all channels available at the radar-navigator's master control panel.
3rd man Interphone controls at both observer stations, then at interphone control in tail compartment.	Call and receive voice communication on normal and auxiliary listen channels from pilot's station. After all calls are completed, monitor all channels available at right-hand and left-hand observer's stations and tail section

f. Establish radio communication with another aircraft or ground station.

RESULT: Each man, except man at interphone controls, should be able to send and receive voice communication through each of the master control panels in his respective section of the aircraft.

g. Disconnect electrical power source.

16–12. SYSTEM ANALYSIS.

TEST EQUIPMENT REQUIRED

Figure and Index No.	Name	Type Designation	Alternate	Use and Application
(None)	MULTIMETER	AN/PSM-6	Multimeter, Federal Stock NO. 6625-649-4593	Troubleshooting intercommunication set AN/AIC-10.

16–13. TROUBLESHOOTING AN/AIC-10. (See figures 16–4 and 16–5.)

SYMPTOM	FUNCTIONAL LOOP	KEY TEST POINTS
Set inoperative.	28-volt D-C power.	1

SYMPTOM	FUNCTIONAL LOOP	KEY TEST POINTS
No operation on normal channel by equipment with power supplied by dynamotor.	Dynamotor.	12, 13, 27, and 28
One master control panel or interphone control does not operate.	Power.	2, 3, 4, 5, 6, 7, 8, 9, 10, 11, 12, 13, 14, 15, 16, 17, 18, 19, 20, 21, 22, 23, 24, 25, 26, 27, and 28
No volume on one master control panel.	Amplifier. Dynamotor.	
No call facilities at one master control panel or interphone control.	Microphone.	
No listen facilities at one master control panel or interphone control.	Headset.	

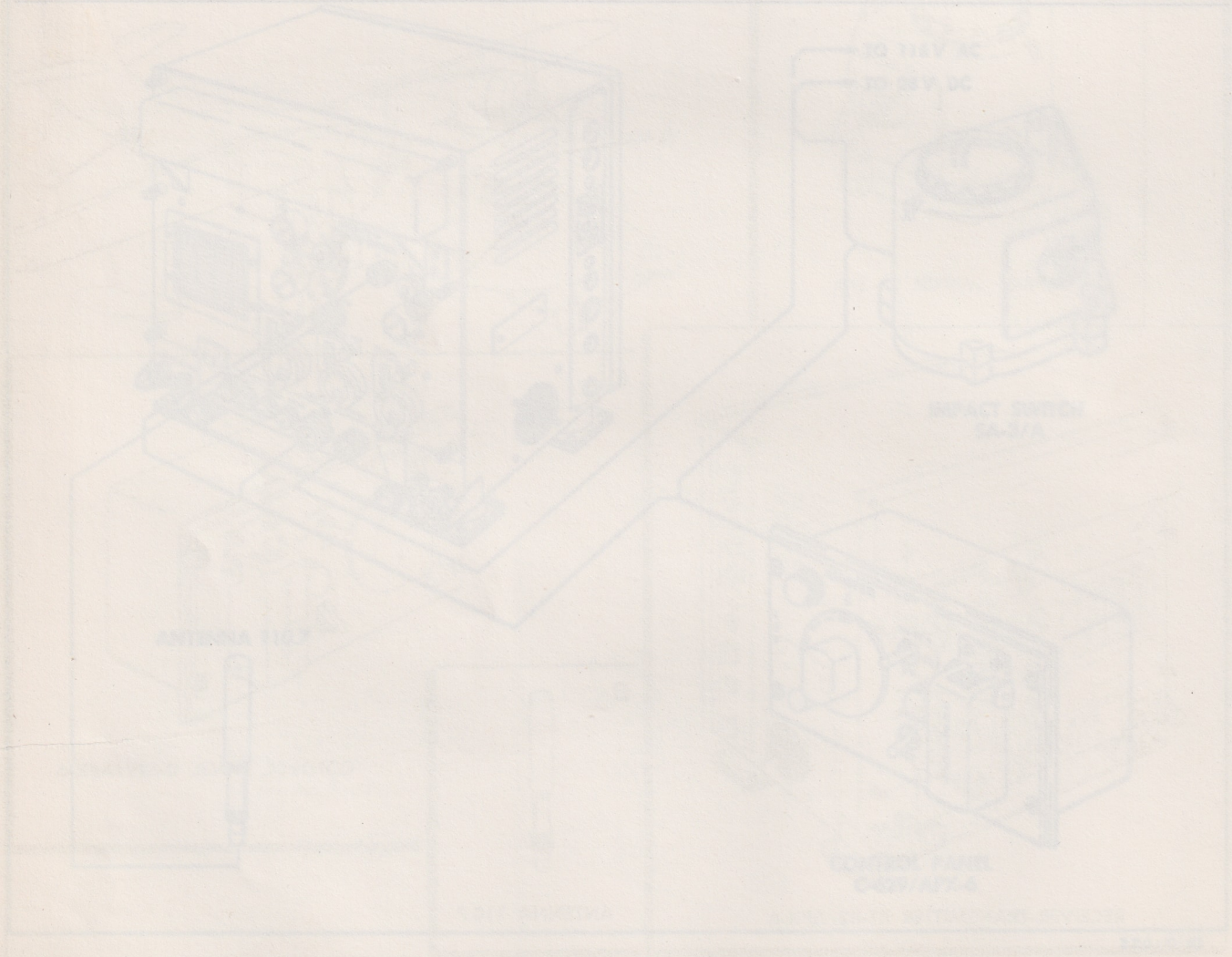

SECTION XVII

RADAR SET AN/APX-6

17–1. DESCRIPTION AND LEADING PARTICULARS.

17–2. This section comprises maintenance instructions for radar set AN/APX-6 installed in SA-16A and SA-16B aircraft. (See figure 17–1.) The set provides automatic radar identification of the aircraft when challenged by surface or airborne radar installations. It also provides identification of friendly aircraft in which similar equipment is installed. The set can transmit an emergency reply in which a specially coded aircraft identification signal is transmitted for any authenic interrogation. Principal components of the set are a receiver-transmitter, control panel, impact switch, and an antenna. Figure 17–2 illustrates complete system data flow.

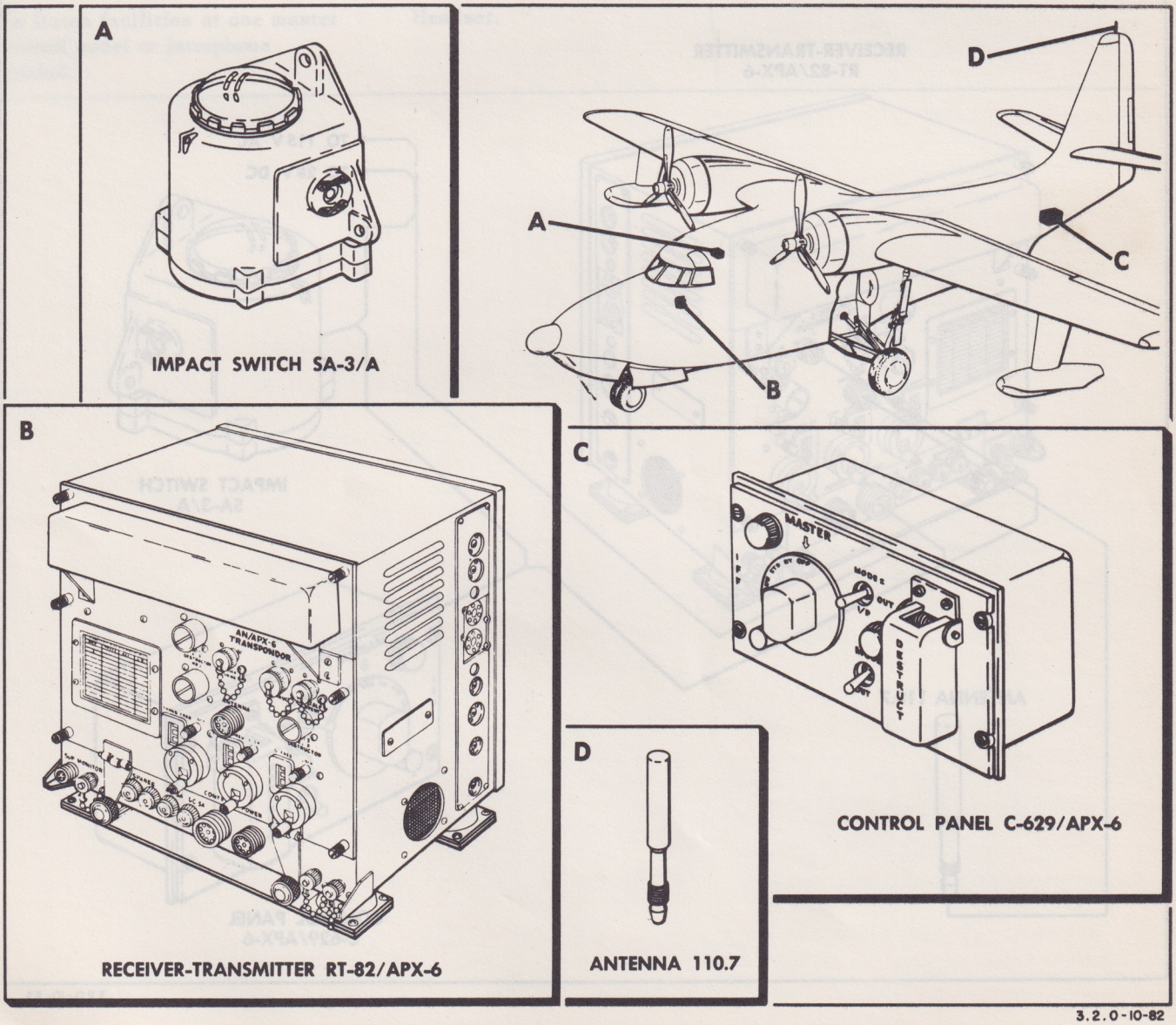

Figure 17–1. Radar Set AN/APX-6 Component Locations

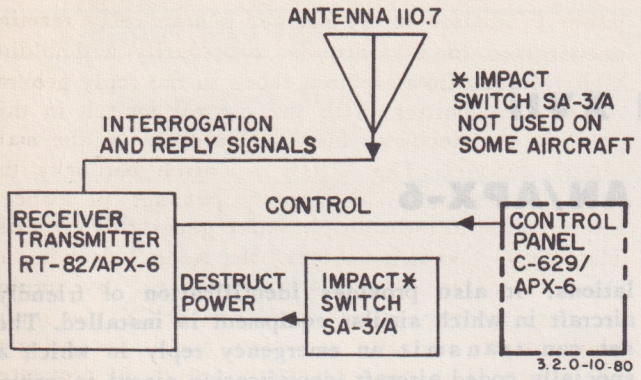

Figure 17–2. Radar Set AN/APX-6 Complete Functional Data Flow

17–3. RECEIVER-TRANSMITTER RT-82/APX-6. (See figure 17–3.) The receiver-transmitter is of the pulse type, connected to a common omnidirectional transmitting and receiving antenna. It has heterodyne circuits and amplifiers that prepare the interrogation signals for application to the decoding circuits. Three decoder circuits block the main channel of all signals except pairs of pulses from an interrogator set having the proper characteristics. Signal output from the decoders is fed to the pulse generator, producing a reply pulse or pulse group. Receptacles are provided in the receiver-transmitter for three destructors. The receiver-transmitter is located in the tail compartment.

17–4. CONTROL PANEL C-629/APX-6. (See figure 17–3.) The control panel provides complete remote control of the set. A five-position master control

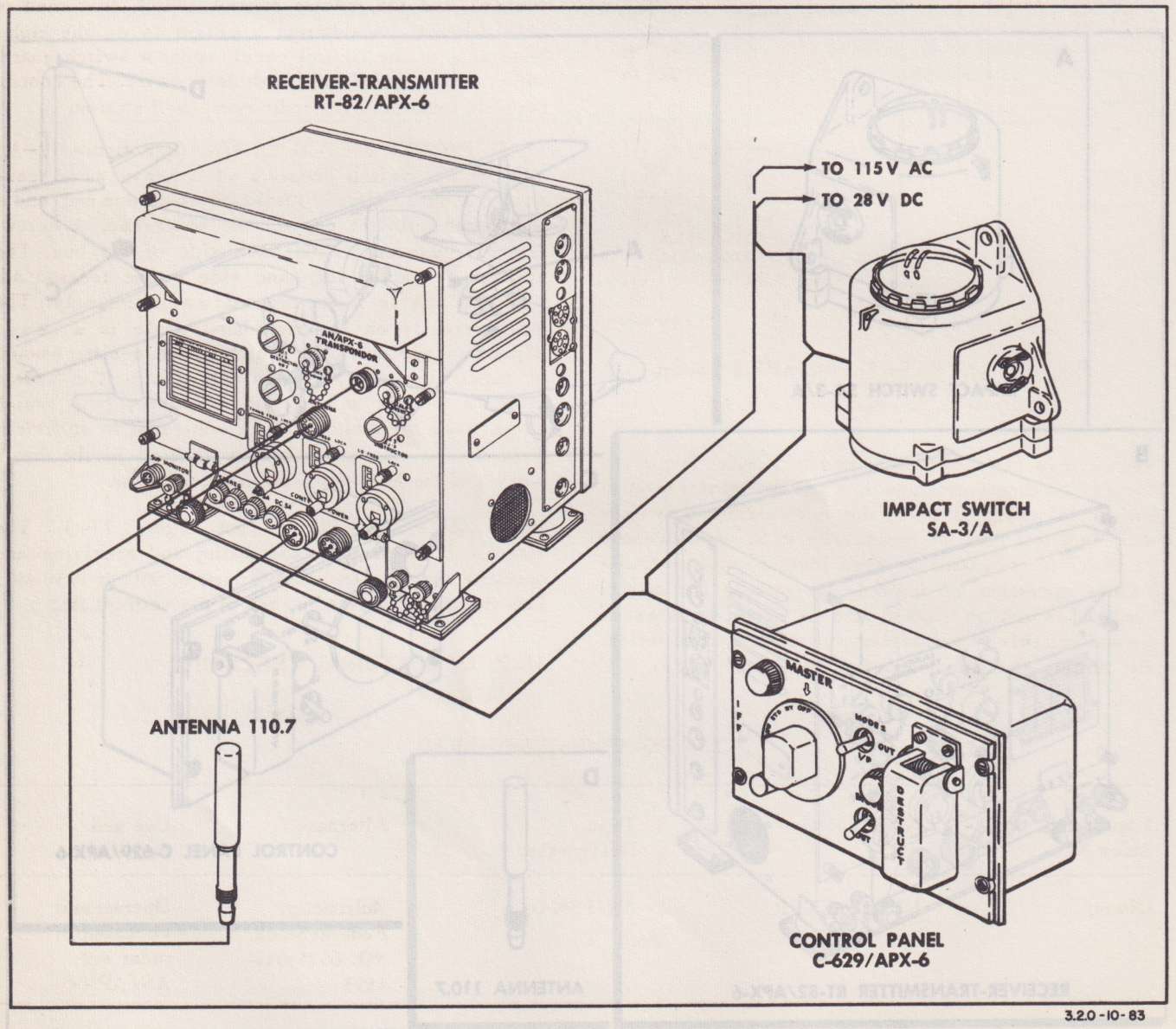

Figure 17–3. Radar Set AN/APX-6 Cabling Diagram

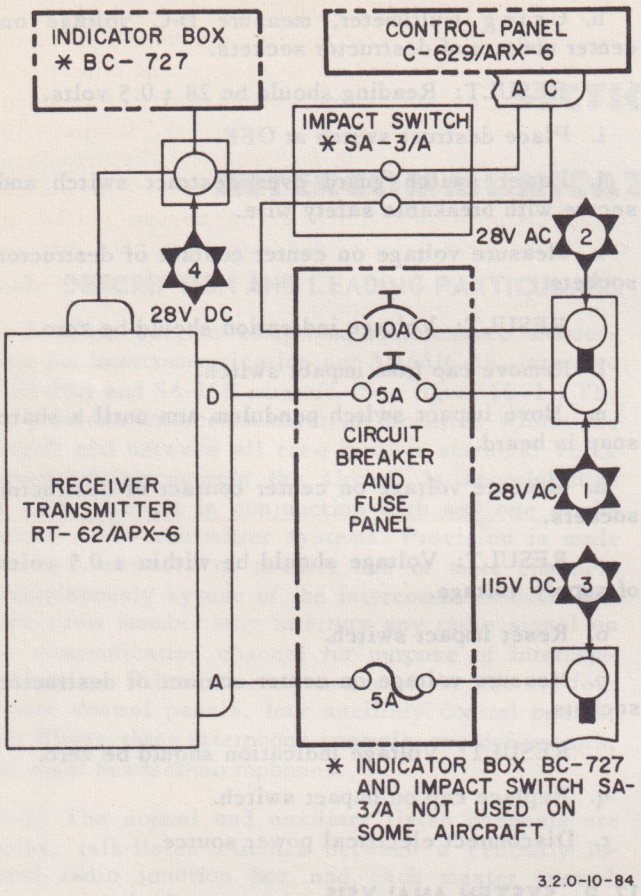

Figure 17–4. Radar Set AN/APX-6 Power Distribution, Connection to Aircraft

switch, two mode switches, and two panel lamps are located on the control panel. When the master control switch is turned to LOW, the intermediate frequency strip is altered for low sensitivity to be used in areas of heavy interrogation or when limited range of transponder operation is desired. By turning the master control switch to NORM, the receiver operates at normal sensitivity and replies to mode 1 interrogation. By turning the master control switch to STBY, A-C power is applied to the set and a start relay remains deenergized for 60 seconds, temporarily withholding high voltages from electron tubes in the reply generator and transmitter. With the control switch in this position the decoders block all signals on the main signal channel. The MODE 2 switch unblocks the mode 2 decoder which permits passage of mode 2 interrogation to the multiple pulse generating circuits. The MODE 3 switch unblocks the mode 3 decoder for more extensive identification purposes. By turning the master control switch to EMERGENCY, the equipment remains normally sensitive, and is receptive to all modes. The master control switch is prevented from being accidentally placed in the EMERGENCY position by a mechanical stop. A release button is in the lower left-hand corner of the control panel. For emergency operation, this release button is depressed and the master control switch is turned to EMERGENCY. A destruct switch is on the right-hand side of the control panel, under a switch guard, which is always secured with safety wire. The control panel is located at the radio operator's station.

17–5. IMPACT SWITCH SA-3/A. (See figure 17–3.) The impact switch consists of a heavy metal case having a dark colored plastic cover on one end and a transparent plastic cap on the other end. A screwdriver adjustment is on each side of the box. The adjustment on the left-hand side is the tension adjustment and is a factory adjustment only. The adjustment on the right-hand side is a reset adjustment, the setting of which determines the amount of impact necessary to trip the switch. The switch contacts in this unit are of the impact type, which close when the switch box is subjected to sufficient force. The impact switch is located in the lower portion of the hull below the radio operator.

17–6. ANTENNA 110-7. (See figure 17–3.) The antenna is used for transmitting and receiving and operates over the frequency range of 950 to 1250 MC. The antenna is located on top of the vertical fin.

17–7. OPERATIONAL CHECKOUT.

TEST EQUIPMENT REQUIRED

Figure and Index NO.	Name	Type Designation	Alternate	Use and Application
(None)	MULTIMETER	AN/PSM-6	Multimeter, Federal Stock NO. 6625-649-4593	Operational checkout of radar set. AN/APX-6.

17-8. OPERATIONAL CHECKOUT OF IMPACT SWITCH SA-3/A.

WARNING

Destructors are installed by the using agency when their use is indicated. Extreme care must be taken while performing maintenance on the receiver-transmitter. Failure to do so may result in injury to personel and destruction of equipment.

a. Make sure aircraft is electrically grounded to an unpainted surface on either main landing gear or nose gear.

b. Connect electrical power source.

c. Disconnect destructor cable from receiver-transmitter.

RESULT: This will remove power from destructors.

d. Remove three destructors from destructor sockets on receiver-transmitter.

e. Connect destructor cable to receiver-transmitter.

f. Place master control switch on control panel C-629/APX-6 at OFF.

g. Remove safety wire from destruct switch guard; raise guard, and place switch at ON.

h. Using multimeter, measure D-C voltage on center contact of destructor sockets.

RESULT: Reading should be 28 ± 0.5 volts.

i. Place destruct switch at OFF.

j. Lower switch guard over destruct switch and secure with breakable safety wire.

k. Measure voltage on center contact of destructor sockets.

RESULT: Voltage indication should be zero.

l. Remove cap from impact switch.

m. Move impact switch pendulum arm until a sharp snap is heard.

n. Measure voltage on center contact of destructor sockets.

RESULT: Voltage should be within ± 0.5 volts of supply voltage.

o. Reset impact switch.

p. Measure voltage on center contact of destructor sockets.

RESULT: Voltage indication should be zero.

q. Replace cap on impact switch.

r. Disconnect electrical power source.

17-9. SYSTEM ANALYSIS.

TEST EQUIPMENT REQUIRED

Figure and Index NO.	Name	Type Designation	Alternate	Use and Application
(None)	MULTIMETER	AN/PSM-6	Multimeter, Federal Stock NO. 6625-649-4593	Troubleshooting radar set AN/APX-6.

17-10. TROUBLESHOOTING AN/APX-6. (See figures 17-4 and 17-5.)

SYMPTOM	FUNCTIONAL LOOP	KEY TEST POINTS
Set inoperative.	Power.	1, 2, 3, and 4
Weak output.	Receiver-transmitter.	
No reception.	Receiver-transmitter. Antenna.	
No transmission.	Receiver-transmitter. Antenna.	

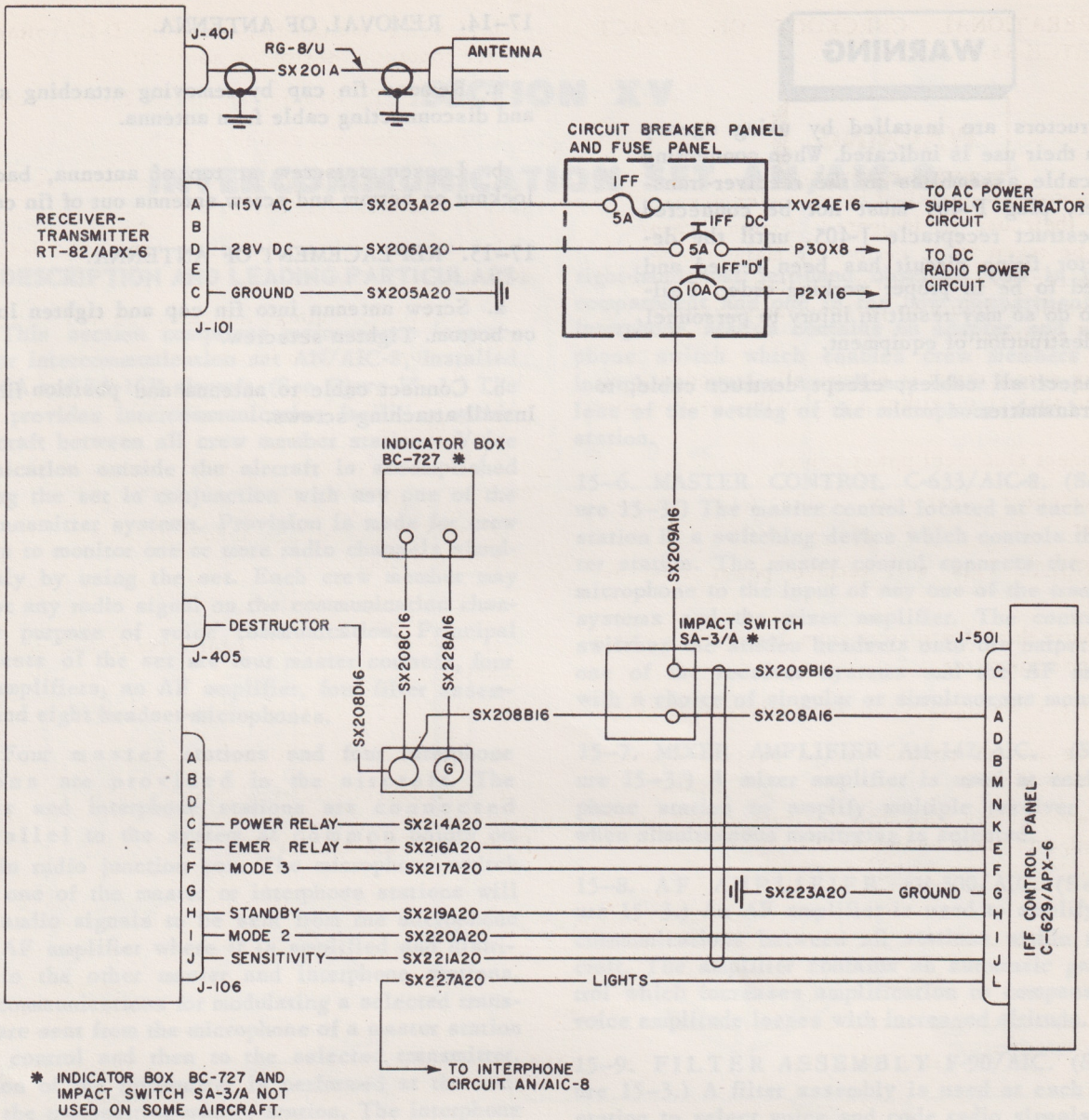

Figure 17–5. Radar Set AN/APX-6 System Intercabling

17–11. REMOVAL AND REPLACEMENT.

17–12. REMOVAL OF RECEIVER-TRANSMITTER RT-82/APX-6.

a. Make sure aircraft is electrically grounded to an unpainted surface on either main landing gear or nose gear and all electrical power is OFF.

b. Remove all cable connections.

c. Remove safety wire from two clamping collars.

d. Unscrew two clamping collars and disengage holddown lugs; allow collars to drop clear.

e. Pull receiver-transmitter slightly forward on mount to disengage tapered pins in rear and remove receiver-transmitter.

17–13. REPLACEMENT OF RECEIVER-TRANSMITTER RT-82/APX-6.

a. Make sure aircraft is electrically grounded to an unpainted surface on either main landing gear or nose gear and all electrical power is OFF.

b. Position receiver-transmitter on mount and secure with holddown lugs. Screw two clamping collars on holddown lugs and secure with safety wire.

WARNING

Destructors are installed by using agency when their use is indicated. When connecting the cable assemblies to the receiver-transmitter, plug P-405 must not be connected to destruct receptacle J-405, until the destructor firing circuit has been tested and proved to be in proper working order. Failure to do so may result in injury to personnel and destruction of equipment.

c. Connect all cables, except destruct cable, to receiver-transmitter.

17–14. REMOVAL OF ANTENNA.

a. Remove fin cap by removing attaching screws and disconnecting cable from antenna.

b. Loosen setscrew at top of antenna, back off locknut on bottom and screw antenna out of fin cap.

17–15. REPLACEMENT OF ANTENNA.

a. Screw antenna into fin cap and tighten locknut on bottom. Tighten setscrew.

b. Connect cable to antenna and position fin cap. Install attaching screws.

SECTION XVIII

INTERROGATOR SET AN/APX-28

18–1. DESCRIPTION AND LEADING PARTICULARS.

18–2. This section comprises maintenance instructions for interrogator set AN/APX-28, installed in SA-16A and SA-16B aircraft. (See figure 18–1.) The set is an IFF interrogation set intended for use in interrogating radar identification set AN/APX-6 or AN/APX-25 and using their replies to present visual indication of range and related azimuth information. Principal components of the set are two antennas, antenna lobe switch, range indicator, receiver-transmitter, and a control panel.

18–3. The transmitter of the set produces interrogating pulses in any of the three Mark 10 modes. These pulses consist of pairs of one-microsecond pulses, the coding being determined by the time-spacing between the pulse pairs. The interrogating pulse-pairs are directed to the antenna lobe switch, which in turn, alternately directs the pulse pairs to first the left-hand antenna, and then to the right-hand antenna. AN/APX-6 or AN/APX-25 radar sets which receive these pulses are in turn, caused to transmit reply pulses. The reply pulses are received by the same antenna from which the challenge was transmitted. The received reply pulses are detected and amplified by the receiver and directed to the cathode-ray tube screen on the range indicator. Reply pulses received on the left-hand antenna cause left deflections and reply pulses received on the right-hand antenna cause right deflections on the indicator screen. When the aircraft is heading directly toward the reply source, both antennas will receive equal signal strength and no deflection will be observed. Figure 18–2 illustrates complete system data flow.

8–4. ANTENNAS RD-R-1114-1 AND RD-R-1114-2. (See figure 18–3.) Antenna RD-R-1114-1 is located on the left-hand side of the nose section and antenna RD-R-1114-2 is located on the right-hand side of the nose section.

18–5. ANTENNA LOBE SWITCH SA-314/APX. (See figure 18–3.) The antenna lobe switch serves to alternately connect the two antennas to the receiver-transmitter, and to alternately connect the video output of the receiver-transmitter to the right-hand and left-hand deflection plates of the range indicator, to provide left-right deviation indication. The antenna lobe switch is located on the middle shelf at the radar-navigator's station.

18–6. RANGE INDICATOR IP-219/APX. (See figure 18–3.) The range indicator contains the cathode-ray tube and its related circuits. Various adjustment controls and operating controls are located on the range indicator. The operating controls consist of a focus control for adjusting anode voltage in the cathode-ray tube for sharp, clear indications on the screen, an intensity control for adjusting sweep trace intensity, a delay range control for controlling delay time between pulses, and a range switch for selecting the range that the set is to present. The range indicator is located on the bottom shelf at the radar-navigator's station.

18–7. RECEIVER-TRANSMITTER RT-198B/UPX-7. (See figure 18–3.) The receiver-transmitter contains the circuits necessary for developing and transmitting interrogation pulses and receiving reply pulses. Controls located on the receiver-transmitter are three tuning controls for tuning of the equipment and a synchronizing switch used to select either an internal or external trigger source. The receiver-transmitter is located on the middle shelf at the radar-navigator's station.

18–8. CONTROL PANEL C-774A/UPX-7. (See figure 18–3.) The control panel contains a receiver gain which controls amplification of the receiver, a challenge switch which energizes the transmitter for operation, and a power switch which controls power to the equipment. The control panel is located beneath the range indicator at the radar-navigator's station.

18–9. OPERATIONAL CHECKOUT.

TEST EQUIPMENT REQUIRED

Figure and Index NO.	Name	Type Designation	Alternate	Use and Application
(None)	RADAR TEST SET	AN/UPM-6A		Operational checkout of interrogator set AN/APX-28.

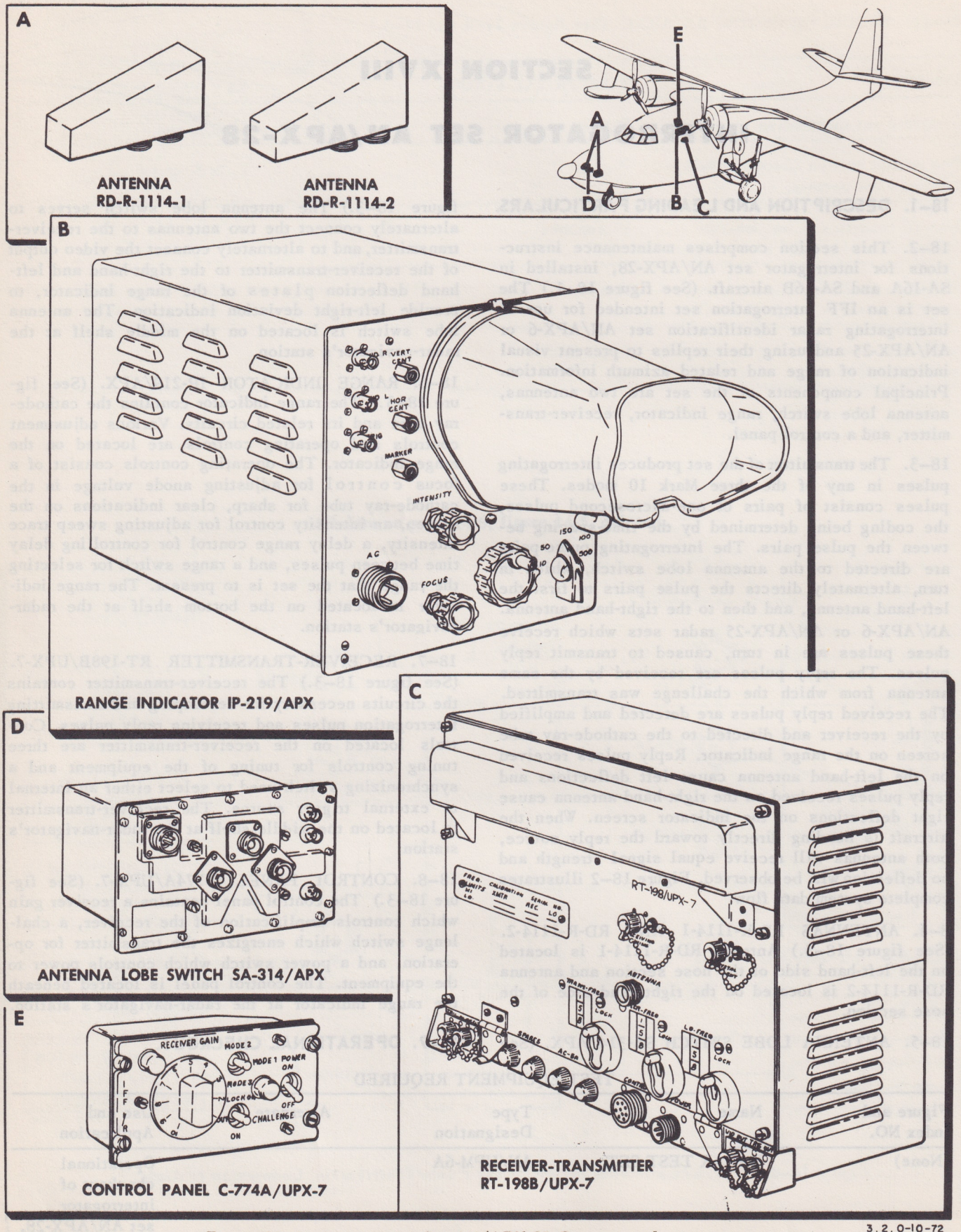

3.2.0-10-72

Figure 18–1. Interrogator Set AN/APX-28 Component Locations

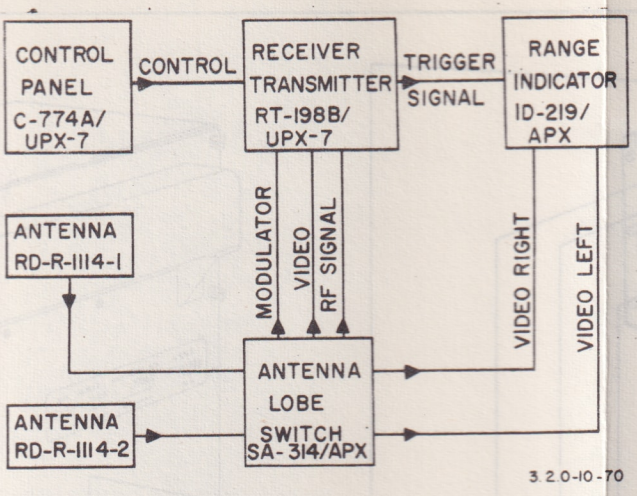

Figure 18–2. Interrogator Set AN/APX-28 Complete

Functional Data Flow

18–10. OPERATIONAL CHECKOUT OF AN/APX-28.

a. Make sure aircraft is electrically grounded to an unpainted surface on either main landing gear or nose gear.

b. Connect electrical power source.

c. Connect the test set to an A-C power source (115V ± 10 percent).

d. Place power switch on test set at ON, allow five minutes for warmup.

e. Adjust input voltage selector so that meter indicates in the green region.

f. Place the SYNC switch at INT.

g. Connect S-G OUT to S-G IN, using R-F jumper cable W-401.

h. Place power switch on interrogator set control panel at ON.

i. Place test selector switch on test set at 4.

j. Place meter range switch on test set at 200.

k. Place mode selector switch on test set at MODE 1.

l. Place mode switch on interrogator set control panel at MODE 1.

m. Adjust meter range selector on test set for highest on-scale peak voltage reading.

RESULT: Decoder indicator lamp should illuminate, showing that interrogator is transmitting correctly shaped mode 1 pulse pairs.

n. Repeat procedure outlined in steps l and m for modes 2 and 3.

o. Read peak voltage meter on test set. Read R-F output of interrogator in DB above one watt, from associated R-F charts on test set. Add 20 DB for attenuation in test probe, also frequency correction in DB (see charts on test set) and R-F power for interconnecting cable (17 DB per 100 feet).

RESULT: This reading should not exceed 24 DB above one watt.

p. Place test selector switch on test set at 6 and wavemeter input switch at TRANSMITTING.

q. Place meter range selector on test set at 0.5 or 1.

r. Rotate wavemeter frequency crank on test set for maximum peak voltage meter reading. Increase meter range if necessary to obtain on-scale reading.

s. Read wavemeter frequency dial on test set. By use of wavemeter calibration chart, determine frequency of interrogator.

RESULT: This reading should not vary more than ±1 MC from center frequency.

t. Set wavemeter frequency dial on test set to correct receiver frequency in accordance with associated charts.

u. Place test selector switch on test set at 6.

v. Place wavemeter input switch on test set at SIGNAL GENERATOR.

w. Rotate bandspread dial on test set to a maximum on-scale peak voltage meter reading, while adjusting meter range switch to an appropriate range.

x. Place test selector switch on test set at 4.

y. Place output level control on test set at 207.

z. Place challenge switch on interrogator control panel at LOCK ON.

aa. Adjust transponder delay control on test set until a single pulse reply is seen to right of sweep trace on range indicator.

ab. While depressing SIG GEN calibrate control on test set, adjust SIG GEN level control until peak voltage meter needle is at red line.

ac. Place wavemeter input switch on test set at OFF.

ad. Rotate bandspread dial on test set in a clockwise direction until pulse displayed on range indicator is at one-half saturation level. Rotate output level control on test set to give a swing in each direction of 10 to 30 degrees. Note dial readings. Rotate band-

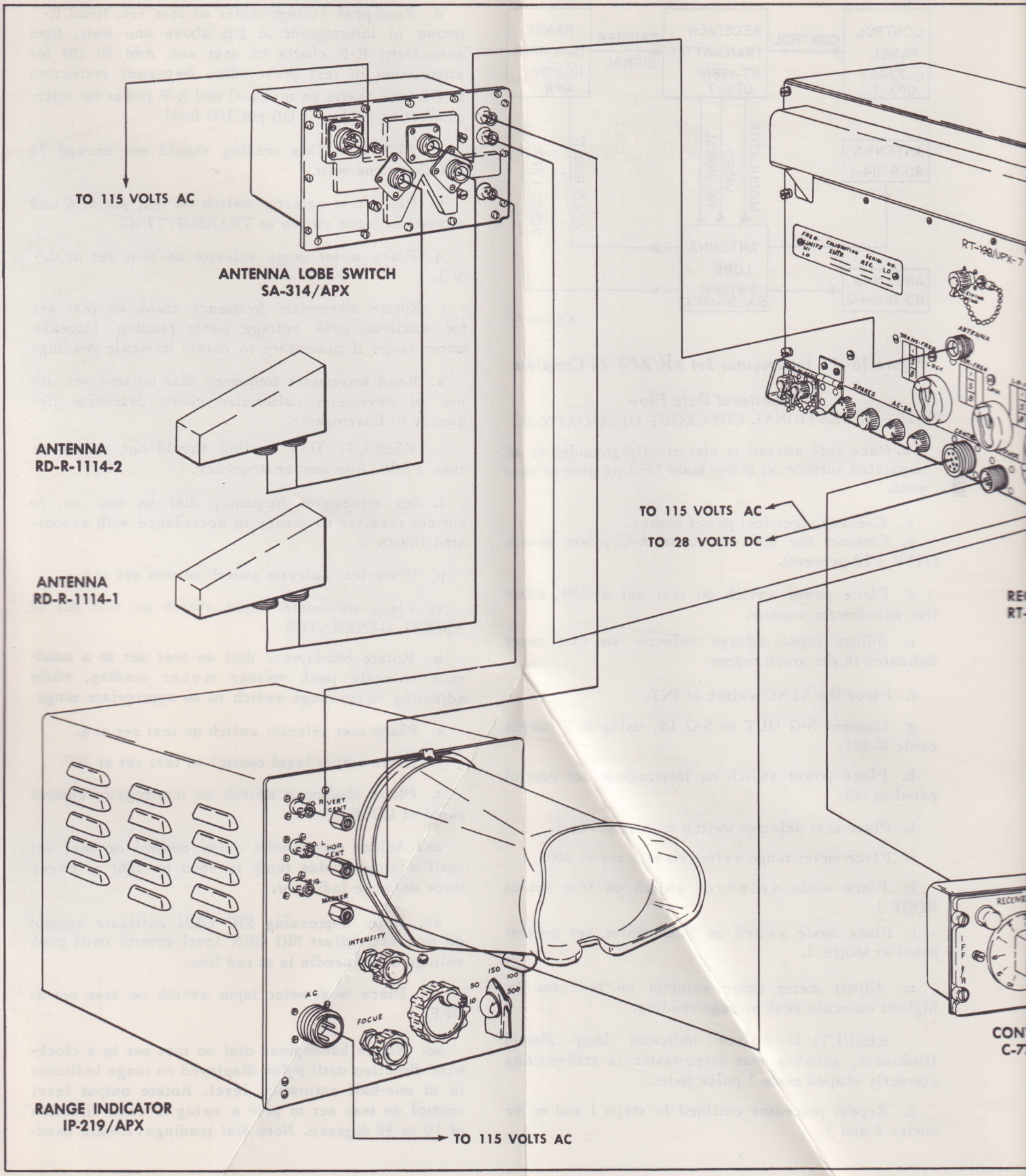

Figure 18–3. Interrogator Set AN/APX-28 Cabling Diag

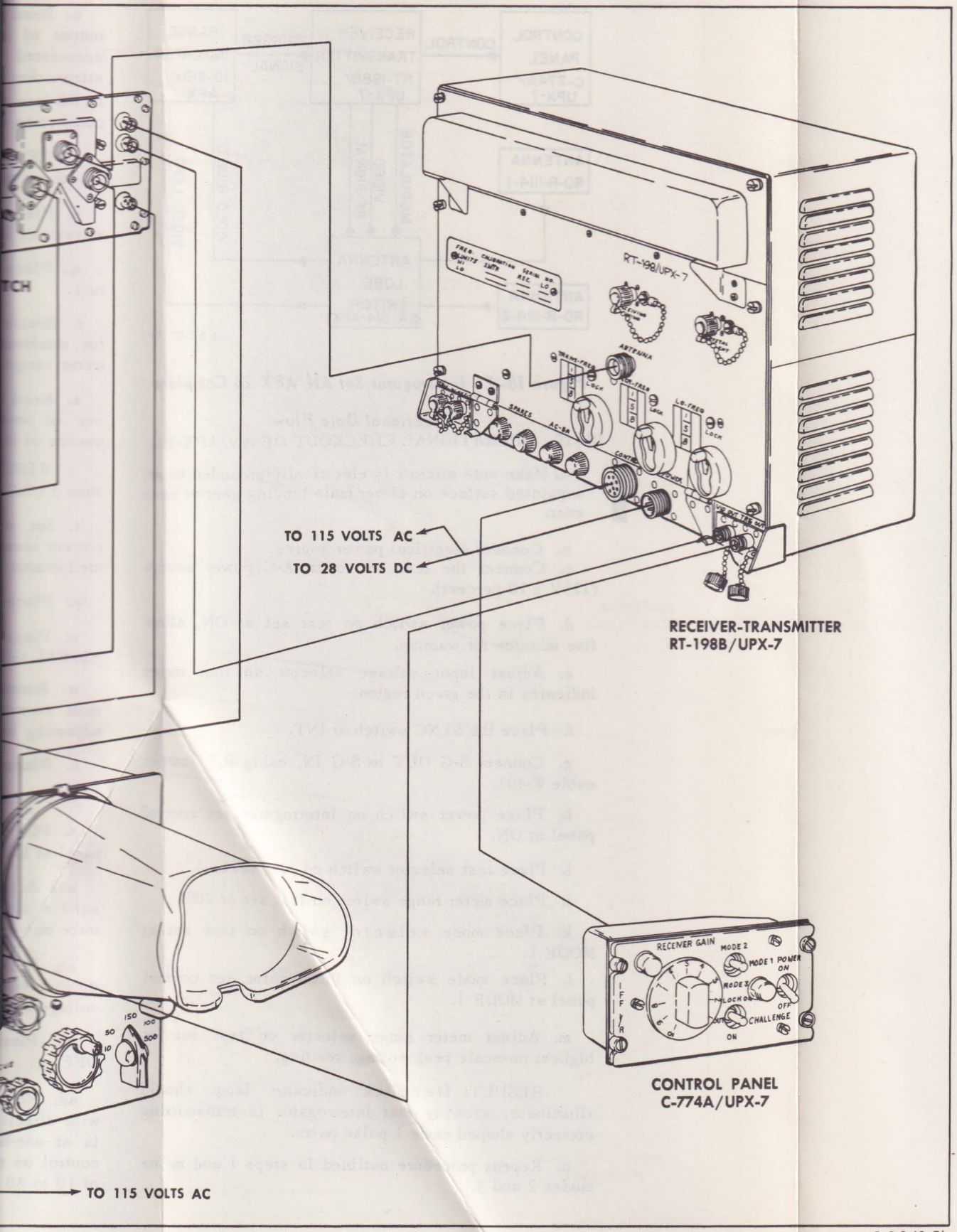

Figure 18–3. Interrogator Set AN/APX-28 Cabling Diagram

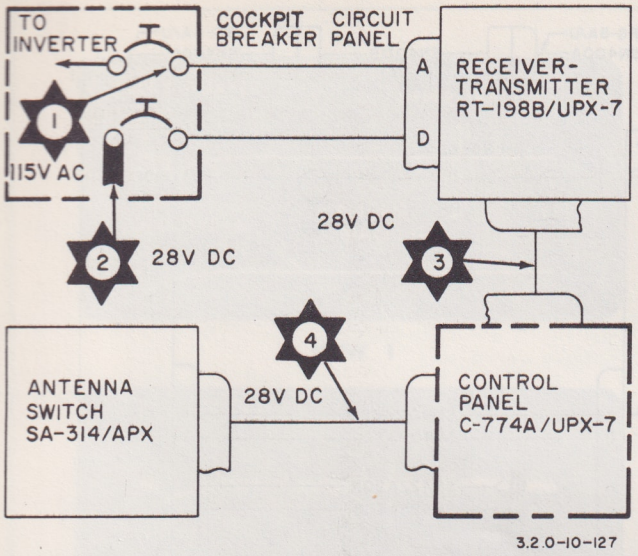

Figure 18–4. Interrogator Set AN/APX-28 Power Distribution, Connection to Aircraft

spread dial midway between two readings, and bandspread index to zero.

ae. Place test selector switch on test set at 6.

af. Place wavemeter input switch on test set at SIGNAL GENERATOR.

ag. Place meter range switch on test set to 0.5.

ah. Rotate wavemeter crank on test set for maximum on-scale peak voltage meter reading. Increase meter range if necessary.

ai. Read wavemeter frequency dial on test set and refer to calibration charts for frequency.

RESULT: This reading should not vary more than ± 1 MC per second from center frequency.

aj. Place test selector switch on test set at 4 and meter range to an appropriate scale.

ak. Rotate output level dial on test set in a counterclockwise direction until pulse viewed on range indicator decreases to one-half saturation amplitude. Read output level dial. Add correction factors of approximately 13 DB (see charts on test set), and 17 DB per 100 feet of R-F cable used.

RESULT: This reading should not exceed 60 DB.

al. Disconnect test set.

am. Disconnect electrical power source.

18–11. SYSTEM ANALYSIS.

TEST EQUIPMENT REQUIRED

Figure and Index NO.	Name	Type Designation	Alternate	Use and Application
(None)	MULTIMETER	AN/PSM-6	Multimeter, Federal Stock NO. 6625-649-4593	Troubleshooting interrogator set AN/APX-28.

18–12. TROUBLESHOOTING AN/APX-28. (See figures 18–4 and 18–5.)

SYMPTOM	FUNCTIONAL LOOP	KEY TEST POINTS
Set completely inoperative.	Power.	1, 2, 3, and 4.
No trace on indicator screen.	Cathode-ray tube.	
Transmission is not alternately from one antenna and then the other.	Antenna lobe switch.	
No left-right deflection on indicator screen.	Antenna lobe switch. Receiver-Transmitter.	

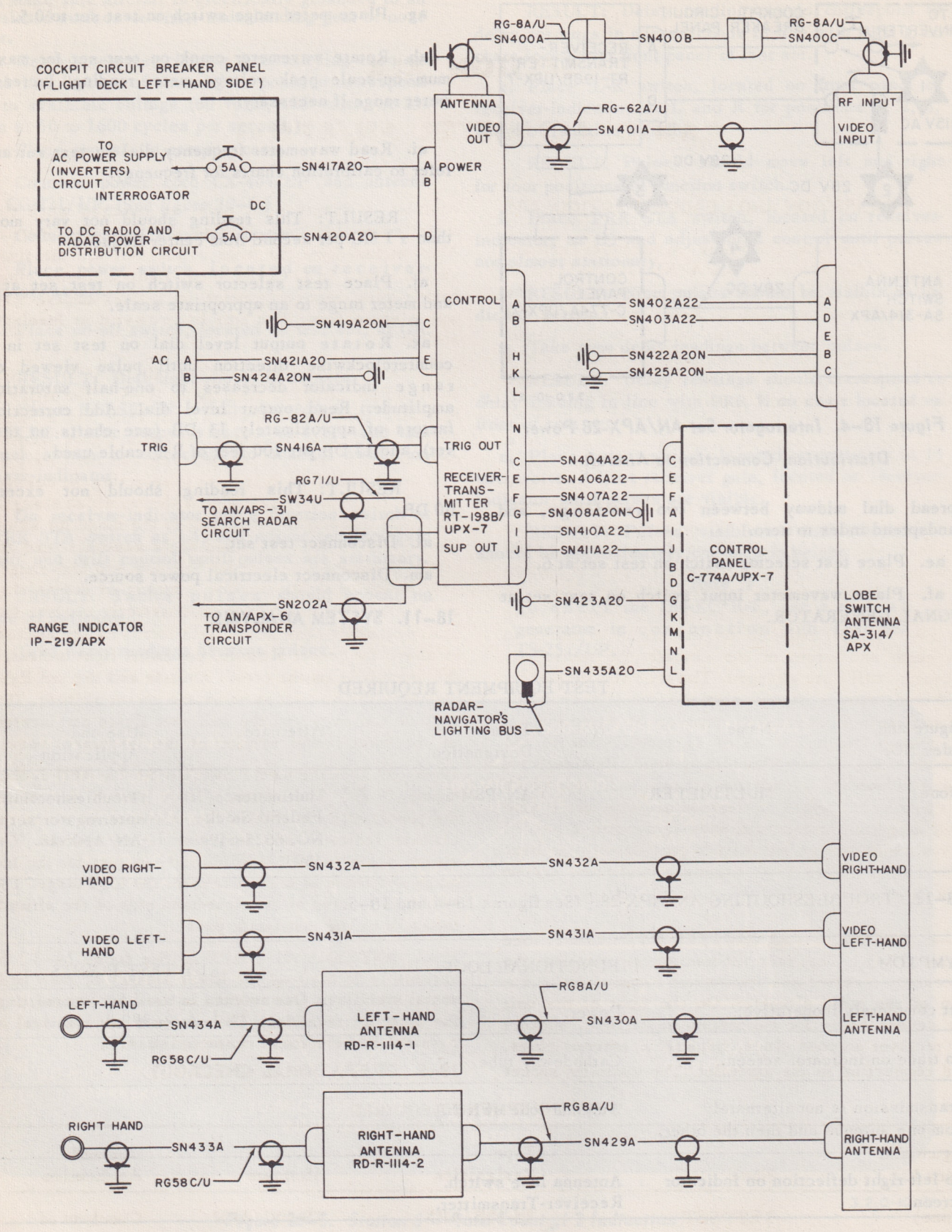

Figure 18–5. Interrogator Set AN/APX-28 System Intercabling

SECTION XIX

RADIO ALTIMETER AN/APN-1

19-1. DESCRIPTION AND LEADING PARTICULARS.

19-2. This section comprises maintenance instructions for radio altimeter AN/APN-1 installed in SA-16A and SA-16B aircraft. (See figure 19-1.) The radio altimeter provides a direct measurement of absolute altitude relative to terrain during flight. Principal components of the radio altimeter are a receiver-transmitter, an altitude indicator, an altitude limit switch, and two antennas.

19-3. The radio altimeter is designed to emit, in a downward direction from the transmitter antenna, a radio frequency carrier which is frequency modulated at a rate of 120 cycles per second between the approximate limit of 420 and 460 MC on the low range (0 to 400 feet) and 443 to 447 MC on the high range (400 to 4000 feet). The earth's surface reflects a portion of this radiated carrier, and the reflected signal is received by means of the receiver antenna. During the time interval required for the signal to travel to the earth and return to the aircraft, the transmitter frequency will have changed. The received frequency, combined with a signal obtained directly from the transmitter will result, by process of detection, in an average frequency which is proportional to the altitude of the aircraft above the ground. This detected signal is used to operate the altitude indicator which is directly calibrated in feet of altitude. It is also used at certain preset altitudes to operate a pair of relays which in turn are used to provide altitude limit indications. Figure 19-2 illustrates complete system data flow.

19-4. RECEIVER-TRANSMITTER RT-7/APN-1. (See figure 19-3.) The receiver-transmitter contains the necessary receiver and transmitter circuits for operation of the radio altimeter. On the front of the unit are access holes for calibration adjustment, sockets for receiver antenna plugs, transmitter antenna plugs, and connection to the autopilot. The autopilot socket contains a dummy pilot plug, as required when the installation does not include the autopilot system. Also included on the front of the unit are the limit switch plug, indicator plug, limit indicator plug, battery plug, and receptacles for a three-ampere fuse and a spare fuse. The unit is located at fuselage station 591.

19-5. ALTITUDE INDICATOR ID-14/APN-1 AND INDICATOR LIGHTS. (See figure 19-3.) The altitude indicator contains a power switch knob and a range switch knob and has three indicator lights located next to it for use with the indicator and limit switch. The range switch knob is used in selecting the desired altitude range and is geared to a shutter which changes the scale numeral to correspond to the range for which the control is set. The fixed-scale numerals read directly in hundreds of feet for both low and high range. The indicator lights provide a means of determining the altitude without having to constantly observe the indicator scale. The green light indicates the aircraft is above the preset altitude, the amber light indicates the aircraft is on the preset altitude and the red light indicates the aircraft is below the preset altitude. The altitude indicator and the indicator lights are located on the main center section of the instrument panel.

19-6. ALTITUDE LIMIT SWITCH SA-1A/APN-1. (See figure 19-3.) The altitude limit switch determines the preset altitude that is the reference to which the altitude indicator and indicator lights operate. The switch scale is calibrated directly in feet for the low range and reads in tens of feet for the high range. The switch is located at the right-hand side of the altitude indicator on the instrument panel.

19-7. ANTENNA AT-4/APN-1. (See figure 14-3.) An antenna is located on the lower surface of each horizontal stabilizer. One antenna is used for transmitting, the other for receiving. The antennas are identical in physical and electrical characteristics.

19-8. OPERATIONAL CHECKOUT.

TEST EQUIPMENT REQUIRED

Figure and Index NO.	Name	Type Designation	Alternate	Use and Application
(None)	TEST SET	TS-10B/APN	TS-10C/APN	Checkout of AN/APN-1.

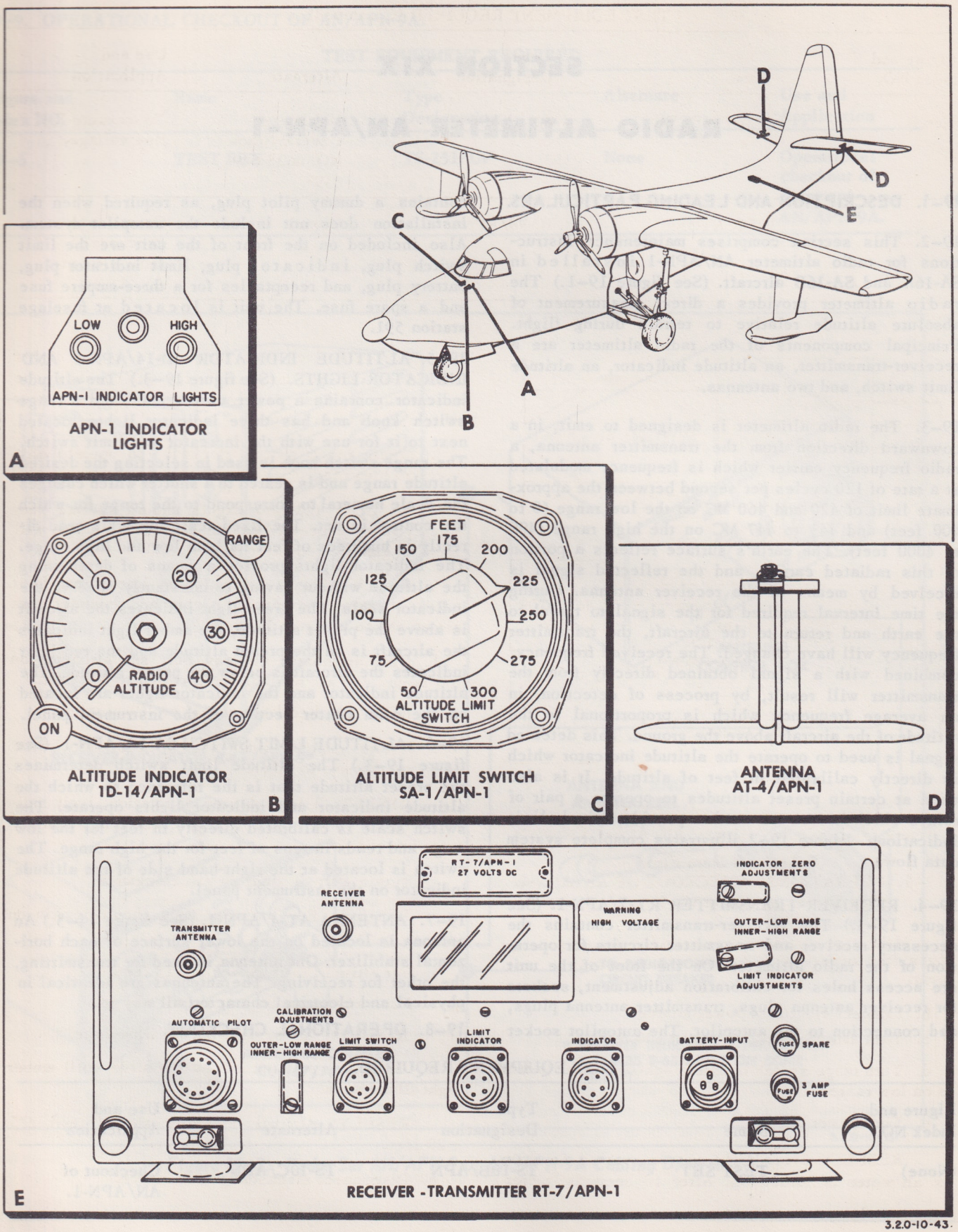

3.2.0-10-43.

Figure 19–1. Radio Altimeter AN/APN-1 Component Locations

TEST EQUIPMENT REQUIRED (Continued)

Figure and Index NO.	Name	Type Designation	Alternate	Use and Application
(None)	MULTIMETER	AN/PSM-6	Multimeter, Federal Stock NO. 6625-649-4593	To measure D-C line voltage.
19–4	INDICATOR	ID-98/APN-1	(None)	Operational checkout of radar altimeter AN/APN-1.

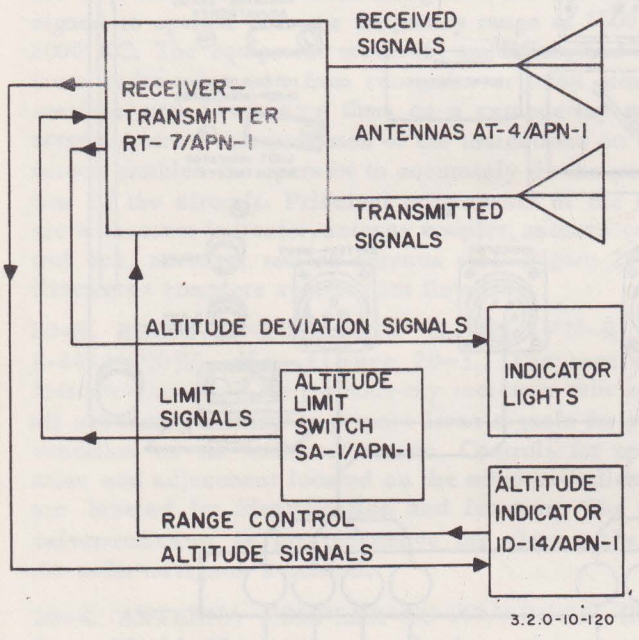

Figure 19–2. Radio Altimeter AN/APN-1 Complete Functional Data Flow

19–9. OPERATIONAL CHECKOUT OF AN/APN-1. (See figures 19–4 and 19–5.)

a. Make sure aircraft is electrically grounded to an unpainted surface on either main landing gear or nose gear.

b. Connect electrical power source.

c. Turn altitude limit switch to 300 feet.

d. Turn range switch counterclockwise so altimeter is on low range.

e. Turn power on.

RESULT: Green light should operate as soon as altimeter is turned on. After 10 seconds, meter reading should rise, then return to zero and lights change to red. Reading on meter will possibly be erratic due to indirect signals when plane is near other objects or in hanger.

f. Rotate range switch clockwise to operate altimeter on high range.

RESULT: Indicator lights should operate very quickly in sequence–green, amber, red. A change will occur in altitude indicator reading.

g. Remove antenna transmission lines from front panel of receiver-transmitter unit and connect test set as shown in figure 19–5.

h. Pull attenuator all way out, set altimeter on low range, and set altitude limit switch to 300 feet.

RESULT: Red light should be illuminated.

i. Rotate altitude limit switch counterclockwise from one extreme to other.

RESULT: For each step of rotation, limit indicator lights should operate very quickly in sequence (green to red).

j. Rotate altitude limit switch clockwise.

RESULT: Red indicator light should remain on through each step.

k. Set altitude limit switch to 225 feet.

l. Push attenuator on test set all way in.

RESULT: Green light should illuminate.

m. Gradually pull out attenuator slide until amber light illuminates.

RESULT: Altitude indicator should read 225 ± 20 feet.

n. Disconnect electrical power source.

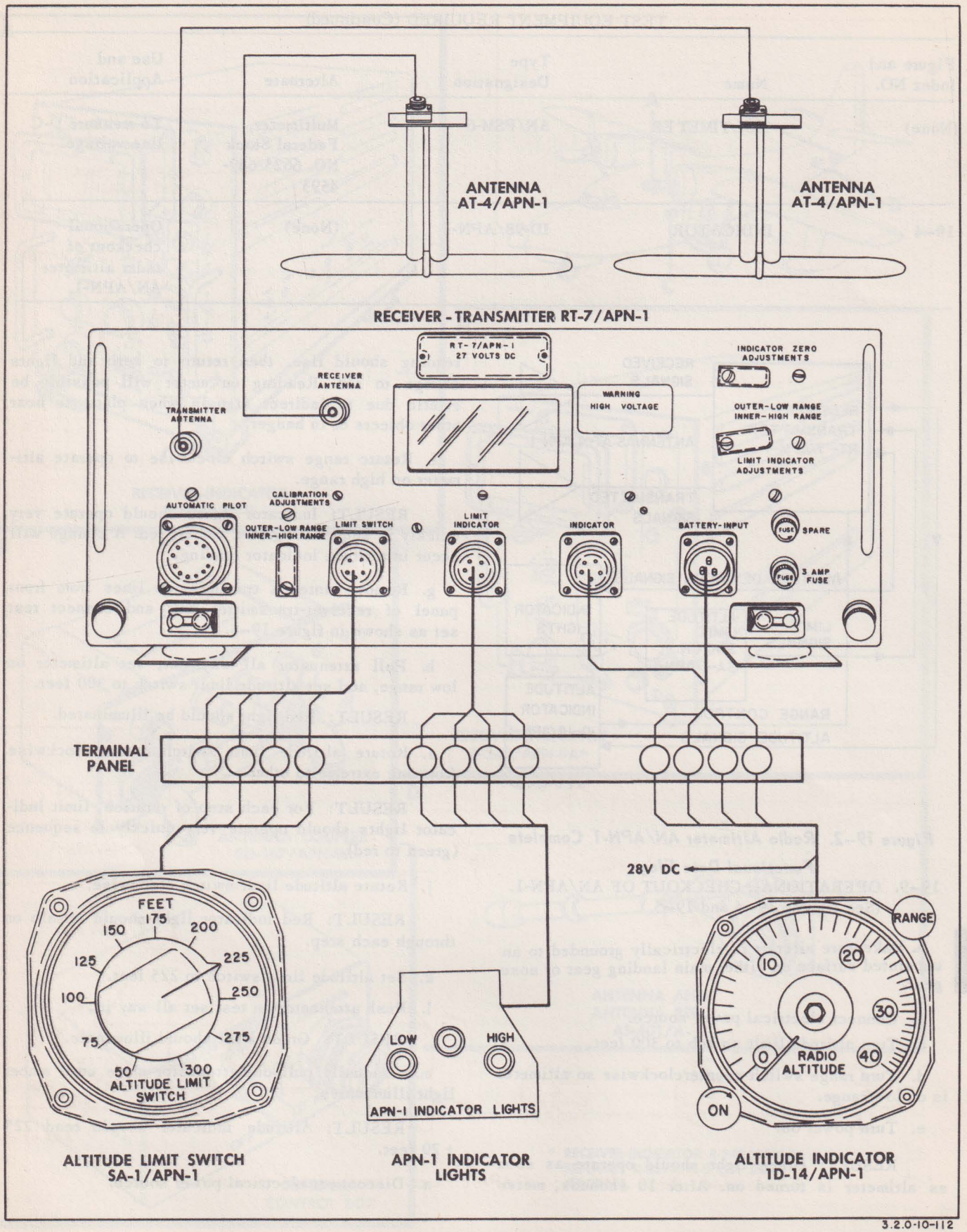

3.2.0-10-112

Figure 19–3. Radio Altimeter AN/APN-1 Cabling Diagram

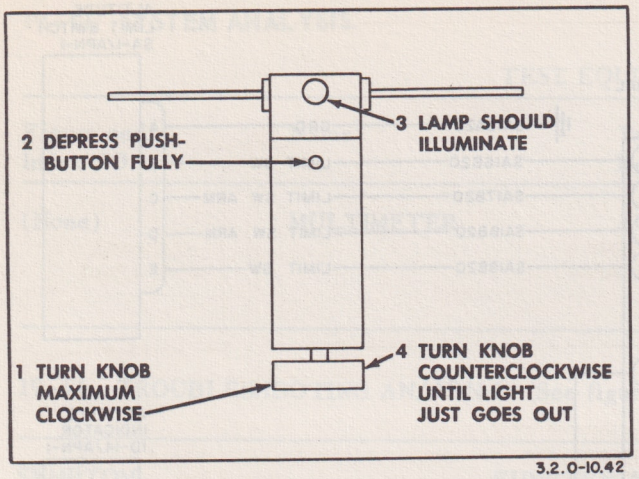

Figure 19–4. Indicator ID-98/APN-1

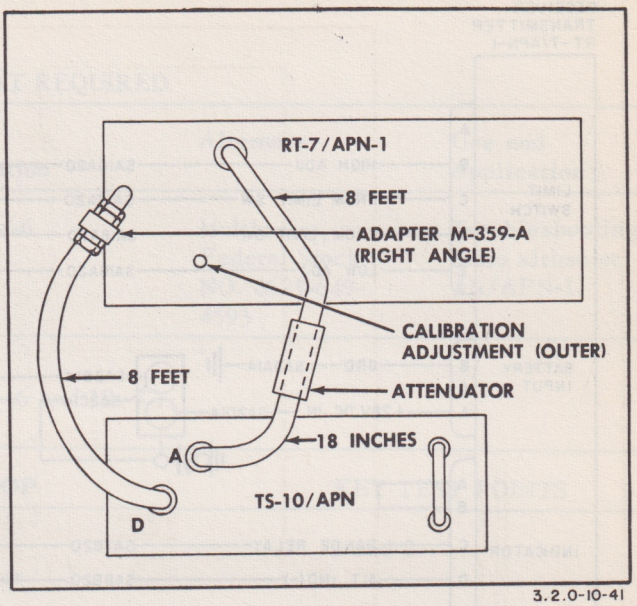

Figure 19–5. AN/APN-1 Wiring Check Setup

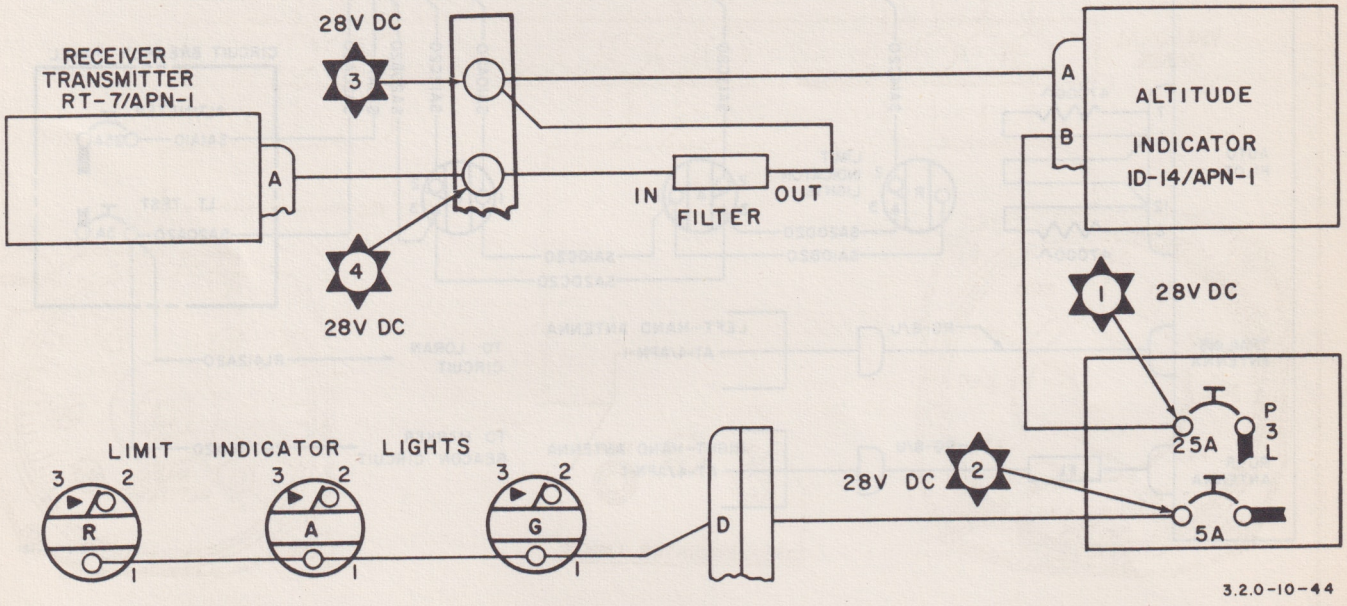

Figure 19–6. Radio Altimeter AN/APN-1 Power Distribution, Connection to Aircraft

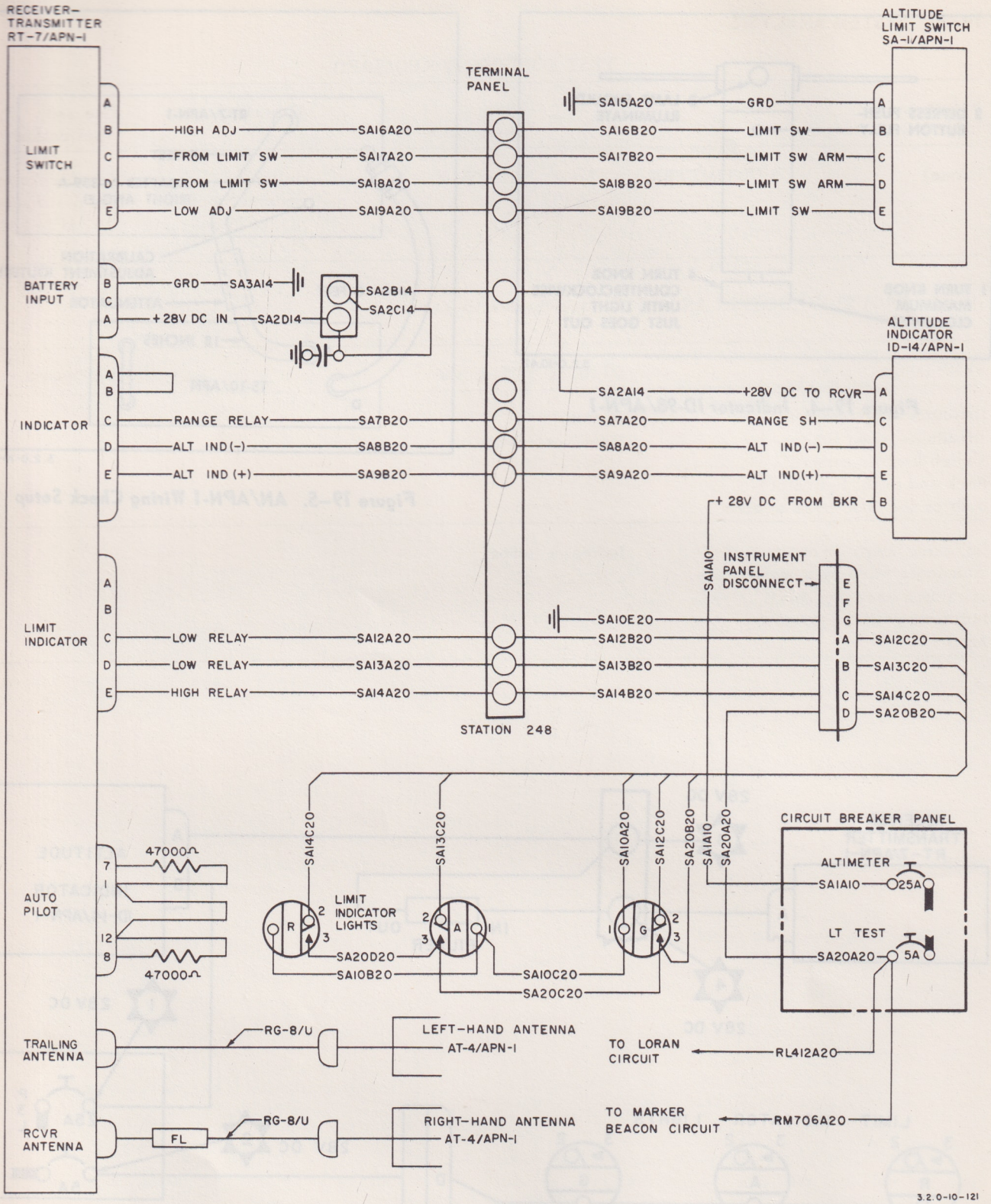

Figure 19–7. Radio Altimeter AN/APN-1 System Intercabling

19–10. SYSTEM ANALYSIS.

TEST EQUIPMENT REQUIRED

Figure and Index NO.	Name	Type Designation	Alternate	Use and Application
(None)	MULTIMETER	AN/PSM-6	Multimeter, Federal Stock NO. 6625-649-4593	Troubleshooting radio altimeter AN/APN-1.

19–11. TROUBLESHOOTING AN/APN-1. (See figures 19–6 and 19–7.)

SYMPTOM	FUNCTIONAL LOOP	KEY TEST POINTS
Indicator lamps do not illuminate when limit switch knob is rotated back and forth. Indicator pointer does not move to zero.	Power. Receiver-transmitter.	1 and 2
Indicator lamps do not illuminate when limit switch is rotated back and forth. Indicator pointer moves to zero.	Indicator lamps.	

SECTION XX

RADAR SET AN/APN-9 OR AN/APN-9A

20-1. DESCRIPTION AND LEADING PARTICULARS.

20-2. This section comprises maintenance instructions for radar set AN/APN-9 or AN/APN-9A, installed in SA-16A and SA-16B aircraft. (See figure 20-1.) The set is a long-range airborne navigation set (loran) designed to operate over the frequency range of 1700 to 2000 KC. The equipment receives, amplifies, and detects radar signals from two pairs of loran ground stations and displays them on a cathode-ray tube screen. Correct interpretation of the indications on the screen enables the operator to accurately fix the position of the aircraft. Principal components of the set are a receiver-indicator, antenna coupler, antenna control box, antenna, and an antenna reel. Figure 20-2 illustrates complete system data flow.

20-3. RECEIVER-INDICATOR R-65/APN-9 OR R-249/APN-9A. (See figure 20-3.) The receiver-indicator contains the cathode-ray indicator tube and all necessary circuits to prepare loran signals for presentation on the indicator screen. Controls for operation and adjustment located on the receiver-indicator are labeled for identification and function. The receiver-indicator is located above the chart table at the radar-navigator's station.

20-4. ANTENNA COUPLER CU-167/APN-9A. (See figure 20-3.) The antenna coupler is used to connect the receiver-indicator to the liaison fixed or trailing antenna. The antenna coupler is located in the aft fuselage at approximately station 614.

20-5. ANTENNA CONTROL BOX. (See figure 20-3.) The antenna control box provides a means of operating the antenna reel and antenna. An indicator light on the control box will illuminate when the antenna is being extended or is fully extended. The light will go out when the antenna is completely retracted. The control box is located at the radar-navigator's station.

20-6. ANTENNA AND ANTENNA REEL AS-401/A. (See figure 20-3.) The antenna is a trailing wire type. The antenna reel provides a means of extending and retracting the antenna. The antenna and antenna reel are located at fuselage station 614.

20-7. OPERATIONAL CHECKOUT.

20-8. OPERATIONAL CHECKOUT OF AN/APN-9.

a. Make sure aircraft is electrically grounded to an unpainted surface on either main landing gear or nose gear.

b. Connect electrical power source and disconnect antenna from receiver-indicator.

c. Place function switch at position 1.

RESULT: Traces and delay marker should appear as shown in figure 20-4, view 1.

d. Turn coarse delay control in one direction and then other direction.

RESULT: Movement of delay marker should occur.

e. Rotate receiver gain to maximum clockwise position.

RESULT: Height of grass should be not less than 1/4 inch as shown in figure 20-4, view 2. Traces should be centered on indicator screen.

f. Place function switch at position 2.

RESULT: Traces should be similar to that shown in figure 20-4, view 3, and should be centered vertically and horizontally.

g. Rotate receiver gain to a maximum clockwise position and adjust amplitude balance for equal hiss amplitude on both traces.

RESULT: Height of grass and space between grass and upper and lower traces should not be less than shown in figure 20-4, view 4.

h. Connect antenna to receiver-indicator and rotate receiver gain until noise amplitude on traces is equivalent to that shown in figure 20-4, view 4.

i. Rotate amplitude balance to an extreme position.

RESULT: Noise indication should disappear from corresponding trace as shown in figure 20-4, view 5.

j. Remove antenna from receiver-indicator and turn gain control to minimum.

k. Place function switch at position 3.

RESULT: Trace pattern should be as shown in figure 20-4, view 6.

l. Place function switch at position 4 and PRR switch at H.

RESULT: Five 1000-microsecond intervals should appear between 5000-microsecond marker as shown in figure 20-4, view 7. Three 5000-microsecond

A

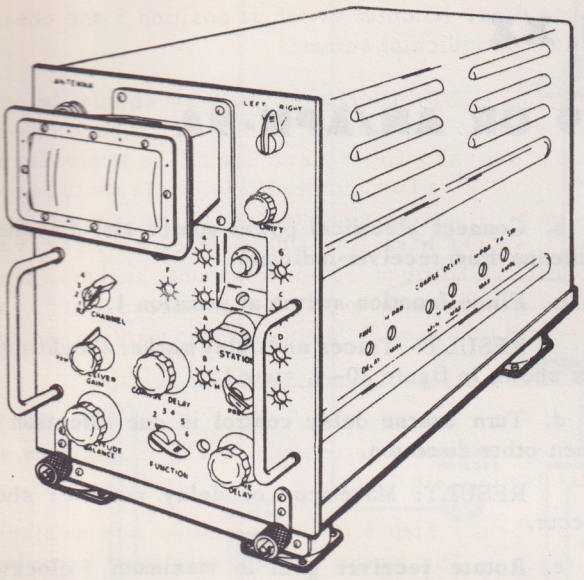

RECEIVER-INDICATOR
R-65/APN-9

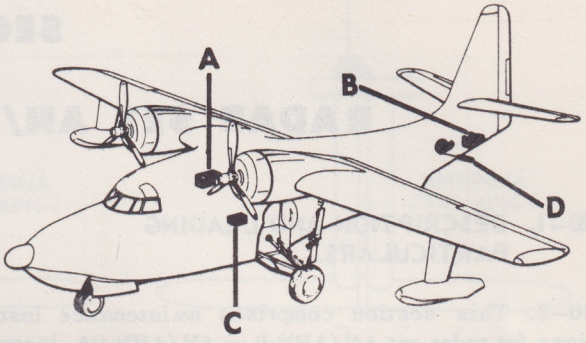

A

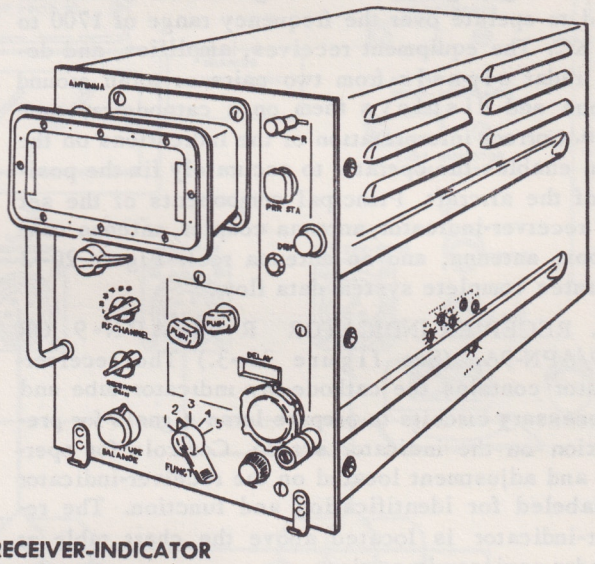

RECEIVER-INDICATOR
R-249/APN-9A*

B

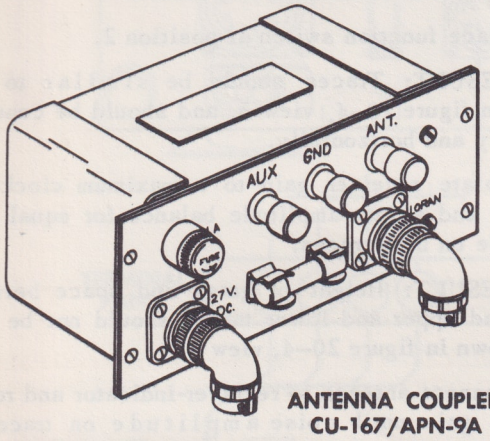

ANTENNA COUPLER
CU-167/APN-9A

C

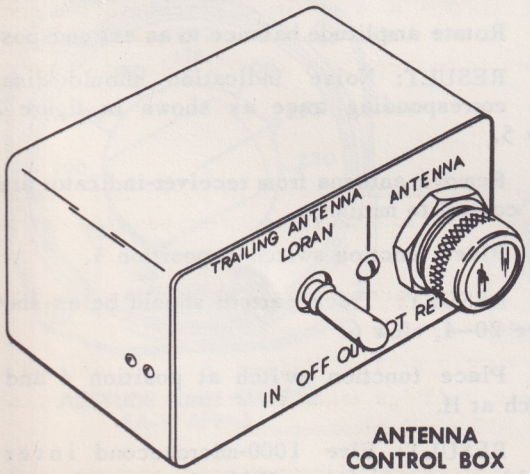

ANTENNA
CONTROL BOX

D

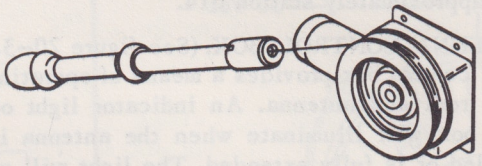

ANTENNA AND
ANTENNA REEL
AS-401/A

* RECEIVER-INDICATOR R-249/APN-9A REPLACES R-65/APN-9 ON SOME AIRCRAFT.

3.2.0-10-94

Figure 20–1. Radar Set AN/APN-9 or AN/APN-9A Component Locations

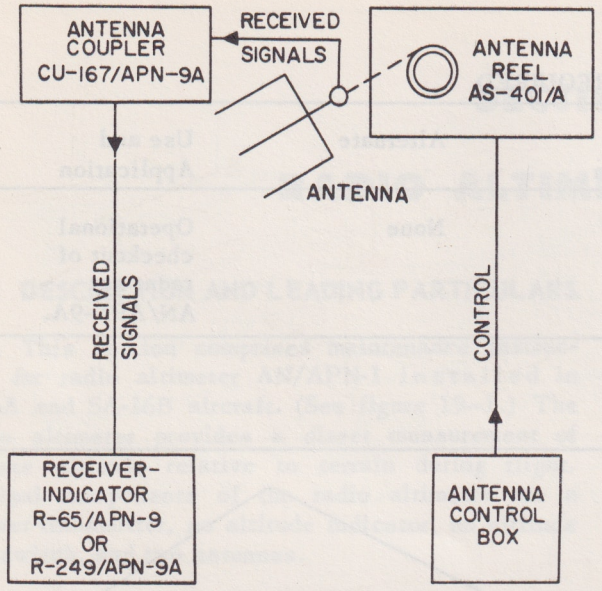

Figure 20–2. Radar Set AN/APN-9 or AN/APN-9A Complete Functional Data Flow

intervals should appear between extreme right-hand and left-hand ends of trace as shown in figure 20–4, view 8.

m. Place PRR switch at L.

RESULT: Four 5000-microsecond intervals should appear between extreme right-hand and left-hand ends of trace as shown in figure 20–4, view 9.

n. Rotate coarse delay control to maximum counterclockwise position and fine delay control to maximum clockwise position.

RESULT: Variable delay marker should be located between 13,000 and 15,000 microseconds from extreme right end of trace as shown in figure 20–4, view 10.

o. Rotate coarse delay control to maximum clockwise position.

RESULT: Variable delay marker should not appear on trace.

p. Place PRR switch at position H.

q. Rotate coarse delay control to maximum counterclockwise position and rotate fine delay control to maximum clockwise position.

RESULT: Variable delay marker should be located between 12,000 and 15,000 microseconds from extreme right end of trace as shown in figure 20–4, view 10.

r. Rotate coarse delay control to a maximum clockwise position.

RESULT: Variable delay marker should not appear on trace.

s. Place function switch at position 5 and observe traces on indicator screen.

RESULT: Height of markers should be such that markers may be identified readily. Space between cross hair and upper trace should be approximately 1/8 inch. Five 10-microsecond intervals should appear between 50-microsecond markers on lower trace. Upper trace should have five 100-microsecond intervals appearing between 500-microsecond markers. Upper trace should have two 500-microsecond intervals appearing between 1000-microsecond markers as shown in figure 20–5.

t. Place station rate switch at 0 and check number of 50-microsecond intervals between cross hairs and first station rate marker.

u. Repeat step t for other station rate settings 1 through 7. The number of intervals must agree with settings as follows:

STATION RATE SWITCH SETTINGS	50-MICROSECOND INTERVALS
0	8
1	7
2	6
3	5
4	4
5	3
6	2
7	1

v. Place station rate switch at position 4, set RIGHT-LEFT switch at RIGHT.

RESULT: Two 50-microsecond intervals should appear between cross hairs and first station rate marker.

w. Place function switch at position 4. Rotate fine delay control to a maximum clockwise position and adjust coarse delay control until variable delay marker is located between 5000 and 5500 microseconds.

x. Place function switch at position 5 and take a fine reading.

y. Place function switch at position 4. Rotate fine delay control to counterclockwise position and take a coarse reading.

z. Place function switch at position 5 and take a fine reading.

RESULT: The difference in microseconds between readings taken in steps x through z should equal 950 ± 100 microseconds.

aa. Disconnect electrical power source.

20–9. OPERATIONAL CHECKOUT OF AN/APN-9A.

TEST EQUIPMENT REQUIRED

Figure and Index NO.	Name	Type Designation	Alternate	Use and Application
20–6	TEST SET	TS-251/UP	None	Operational checkout of radar set AN/APN-9A.

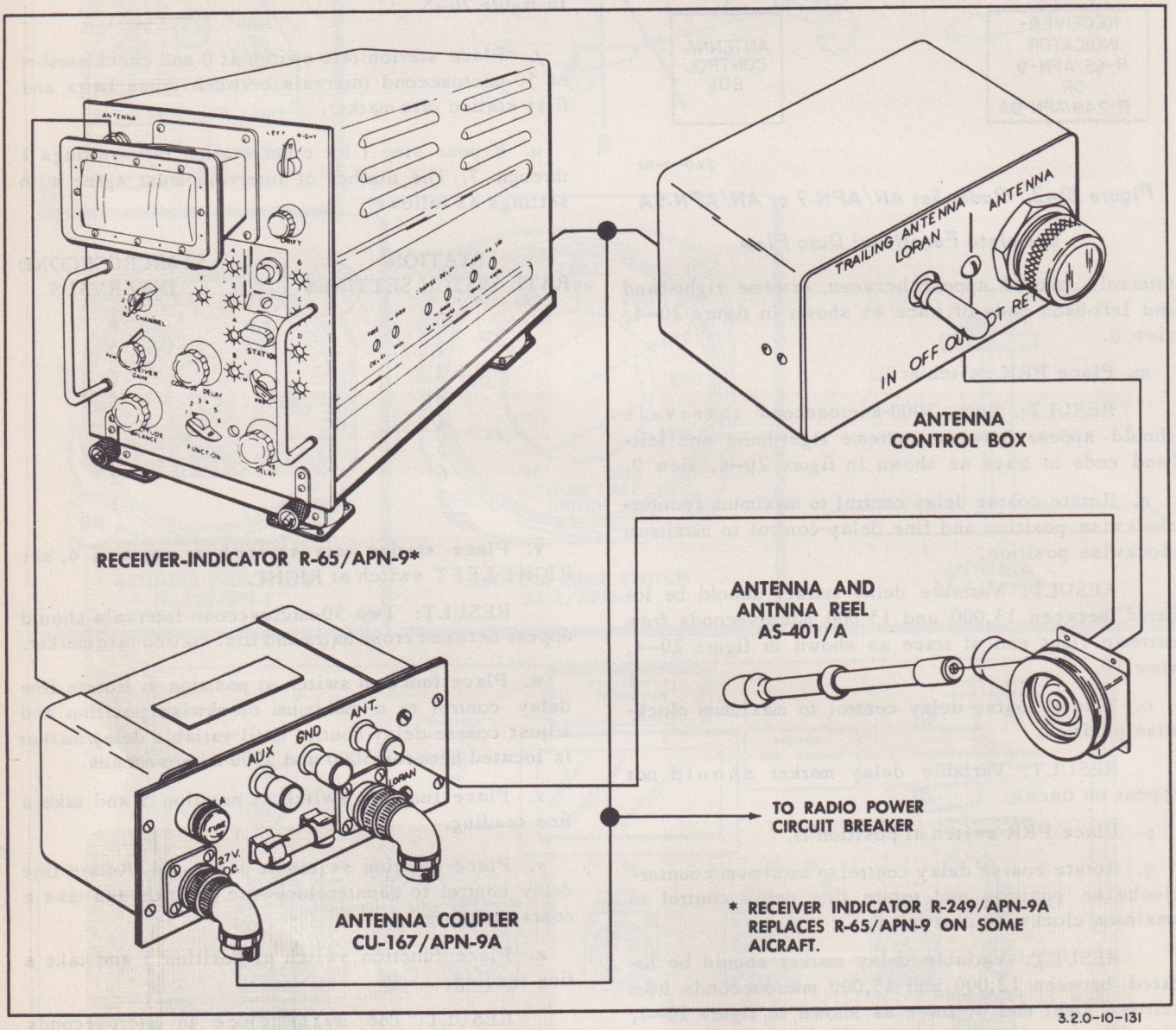

Figure 20–3. Radar Set AN/APN-9 or AN/APN-9A Cabling Diagram

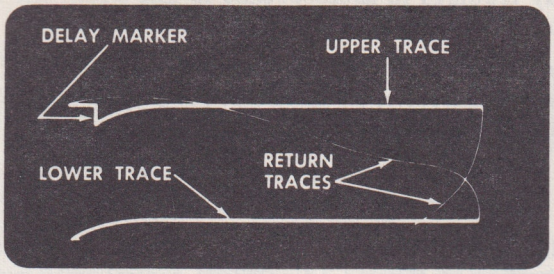

VIEW 1

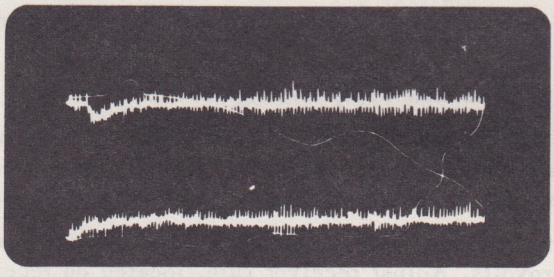

VIEW 2

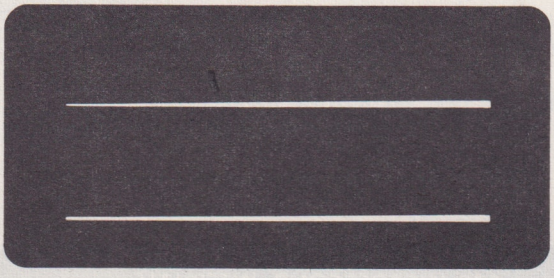

VIEW 3

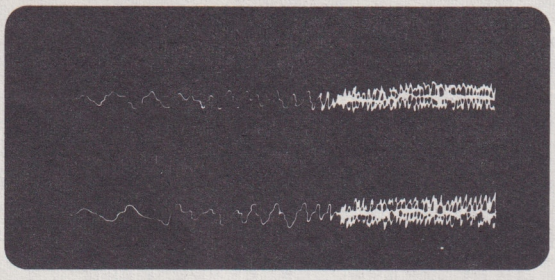

VIEW 4

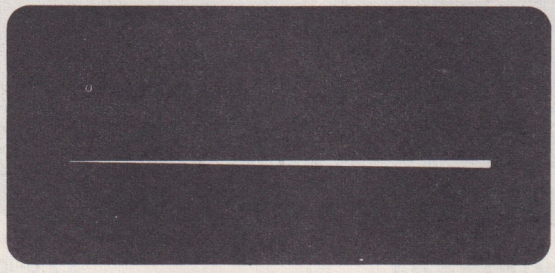

VIEW 5

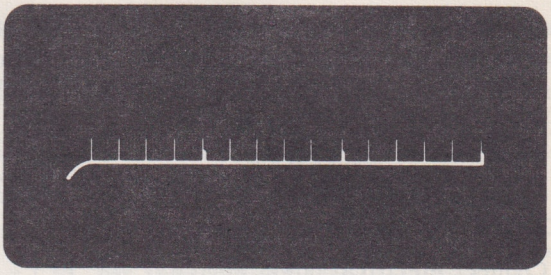

VIEW 6

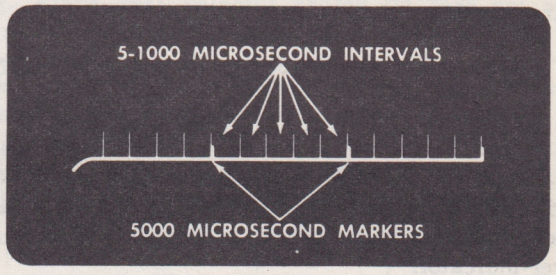

VIEW 7

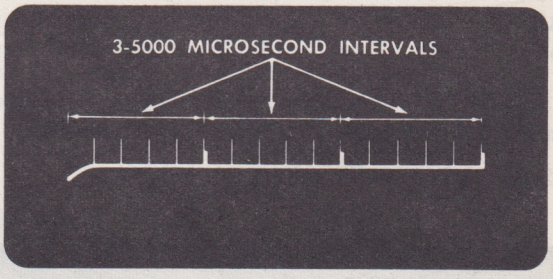

VIEW 8

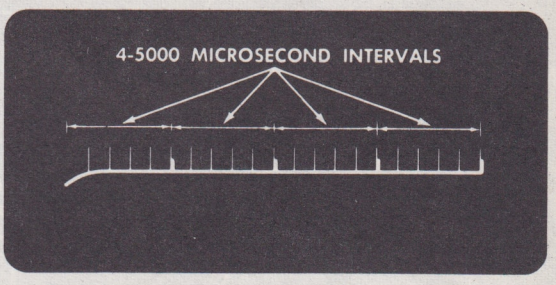

VIEW 9

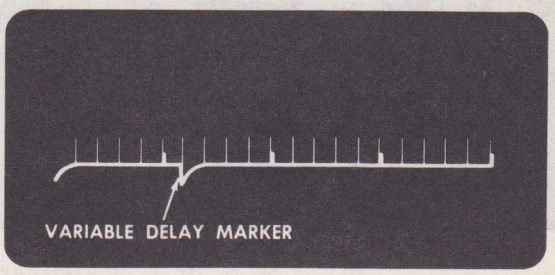

VIEW 10

3.2.0-10-73.

Figure 20–4. AN/APN-9 Scope Indications

a. Make sure aircraft is electrically grounded to an unpainted surface on either main landing gear or nose gear.

b. Remove test set chassis from carrying case and check link (bottom of chassis) for position corresponding to available voltage (80 volts, 115 volts, or 230 volts at 50 to 1600 cycles per second.)

c. Place chassis in carrying case.

d. Connect power cord CX-404/UP and antenna cord CG-221/UP. (See figure 20–6.)

e. Connect electrical power source.

f. Place power switch, located on receiver-indicator, at ON.

g. Place on-off switch, located on test set, at ON.

RESULT: Dial light should illuminate.

h. Place PULSE CW switch, located on test set, at PULSE. Place output switch at 1 MV and turn channel switch to correspond to channel switch on receiver-indicator.

i. On receiver-indicator place function switch at 1, PRR STA switch at L4, and adjust receiver gain control and drift control until pulses are stationary.

RESULT: Twelve pulses should appear on screen of indicator.

j. Take delay readings between pulses.

RESULT: Delay reading should correspond to delay readings in microseconds in line with PRR L on chart located on front panel of test set.

k. Place L-R switch, located on front panel of receiver-indicator, at L and R for positions 1, 2, 3, and 4 of function switch.

RESULT: Pulses should move left and right for four positions of function switch.

l. Place PRR STA switch, located on receiver-indicator, at H3 and adjust drift control until pulses are almost stationary.

RESULT: Nine pulses should be visible on indicator screen.

m. Take time delay readings between pulses.

RESULT: Delay readings should correspond to delay reading in line with PRR H on chart located on front of test set.

n. Place output switch, located on test set, at 15 microvolts. Adjust receiver gain, located on receiver-indicator until pulses are visible.

RESULT: Pulses visible on indicator screen should be approximately one inch in height.

Note

To check the 180-KC R-F, use a signal generator in conjunction with Test Set TS-251/UP.

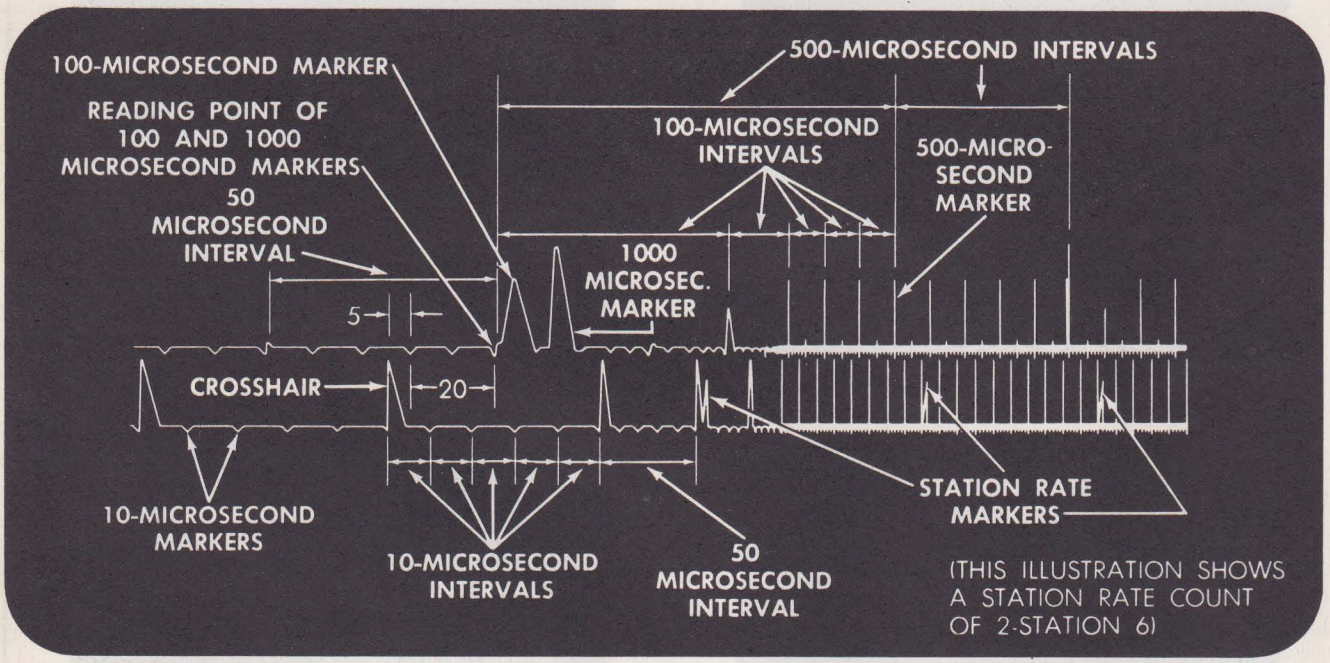

3.2.0-10-74

Figure 20–5. Station 6 – Rate Count of 2 Indication

20–10. SYSTEM ANALYSIS.

TEST EQUIPMENT REQUIRED

Figure and Index NO.	Name	Type Designation	Alternate	Use and Application
(None)	MULTIMETER	AN/PSM-6	Multimeter, Federal Stock NO. 6625-649-4593	Troubleshooting AN/APN-9.

20–11. TROUBLESHOOTING AN/APN-9 OR AN/APN-9A. (See figures 20–7 and 20–8.)

SYMPTOM	FUNCTIONAL LOOP	KEY TEST POINTS
With FUNCTION switch at position 1, no spot with brilliance at any point.	Power.	1, 2, 3, 4, and 5
Cathode-ray tube screen is blank and pilot lamp does not illuminate.	Fuse.	
Intermittent operation.	Wiring.	

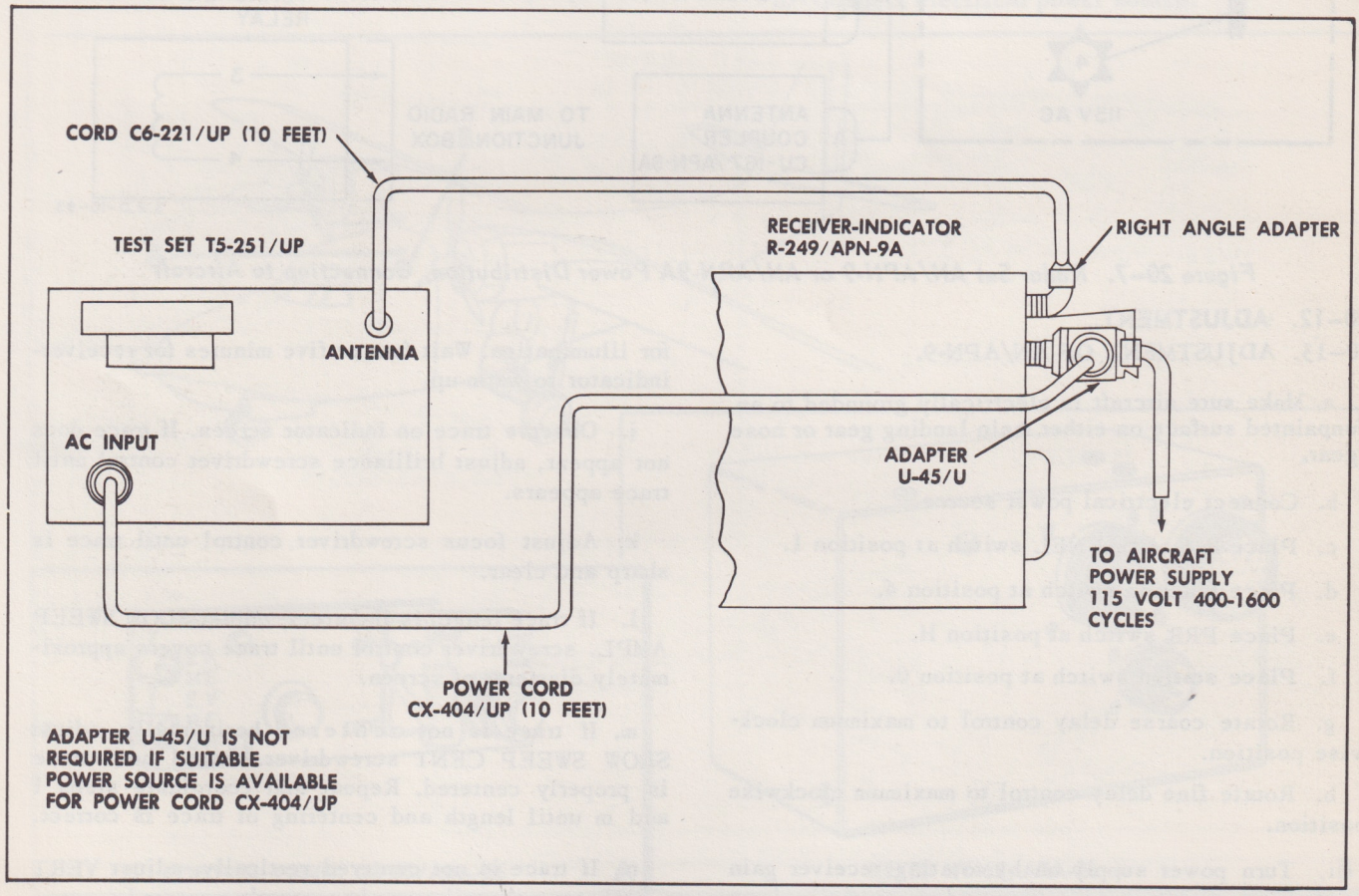

Figure 20–6. Test Set TS-251/UP and AN/APN-9A Cabling Diagram

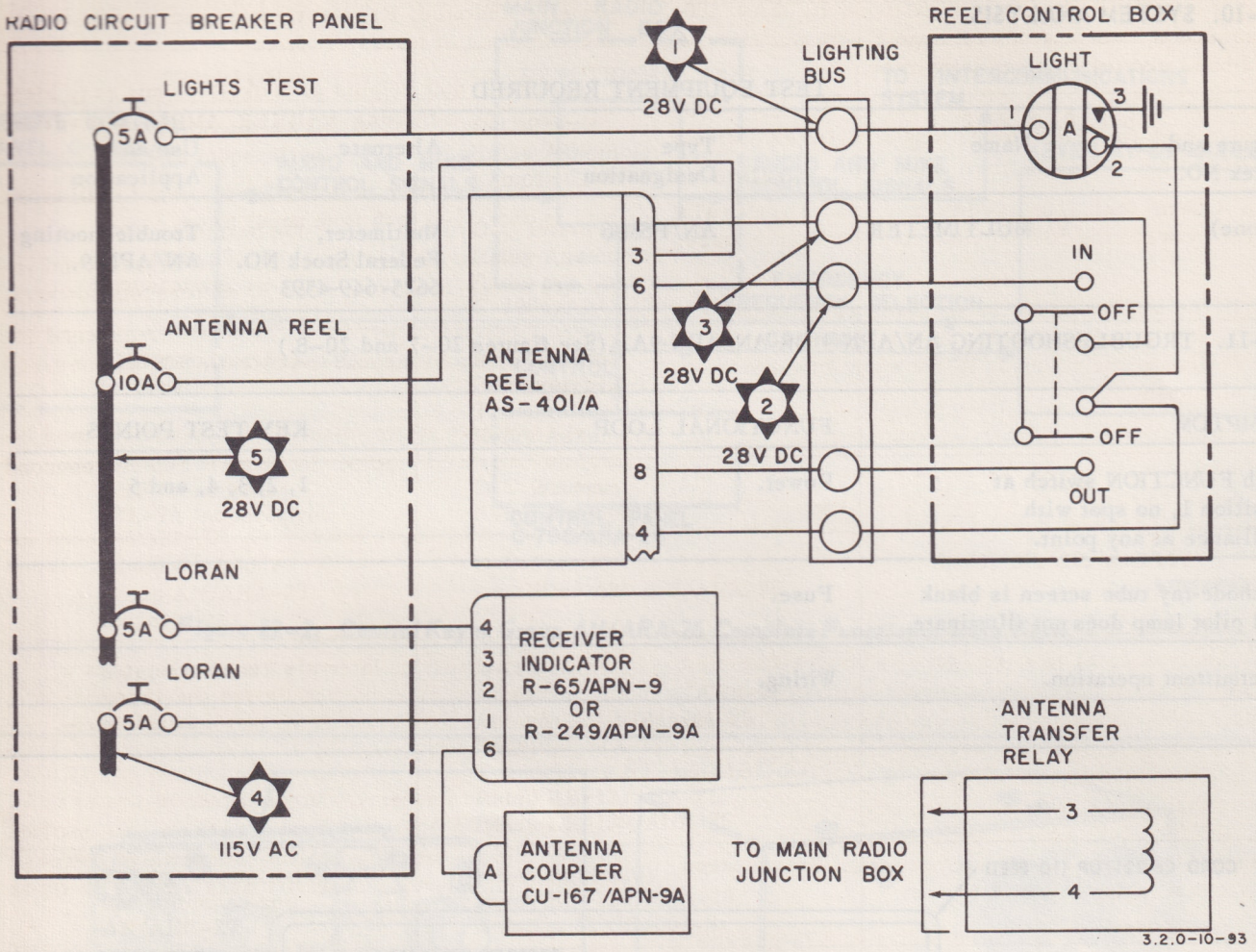

Figure 20–7. Radar Set AN/APN-9 or AN/APN-9A Power Distribution, Connection to Aircraft

20–12. ADJUSTMENT.

20–13. ADJUSTMENT OF AN/APN-9.

a. Make sure aircraft is electrically grounded to an unpainted surface on either main landing gear or nose gear.

b. Connect electrical power source.

c. Place R.F. CHANNEL switch at position 1.

d. Place function switch at position 4.

e. Place PRR switch at position H.

f. Place station switch at position 0.

g. Rotate coarse delay control to maximum clockwise position.

h. Rotate fine delay control to maximum clockwise position.

i. Turn power supply on by rotating receiver gain control in a clockwise direction and observe pilot lamp for illumination. Wait four or five minutes for receiver-indicator to warm up.

j. Observe trace on indicator screen. If trace does not appear, adjust brilliance screwdriver control until trace appears.

k. Adjust focus screwdriver control until trace is sharp and clear.

l. If trace length is incorrect, adjust SLOW SWEEP AMPL. screwdriver control until trace covers approximately diameter of screen.

m. If trace is not centered horizontally, adjust SLOW SWEEP CENT screwdriver control until trace is properly centered. Repeat and coordinate steps l and m until length and centering of trace is correct.

n. If trace is not centered vertically, adjust VERT CENT control until trace is correctly centered.

o. Place PRR switch at position H; three 500-microsecond intervals should appear between extreme right-hand and left-hand ends of trace.

p. Place PRR switch at position L; four 5000-microsecond intervals should appear between extreme right-hand and left-hand ends of trace.

q. Check that five 1000-microsecond intervals appear between the 5000-microsecond markers on trace.

Note

If the number of intervals observed in steps p and q are incorrect, reject the receiver-indicator and return it to the shop for proper alignment.

r. Place PRR switch at position H. If variable delay marker appears on trace, with coarse delay and fine delay controls both in extreme clockwise position, slowly turn COARSE DELAY-H-PRR MIN. control to a point slightly beyond where variable delay marker disappears.

s. Place PRR switch at position H and rotate coarse delay knob to maximum counterclockwise position. The variable delay marker should appear on trace and 10.5 to 12, 1000-microsecond intervals should appear between variable delay marker and extreme right-hand end of trace. If this time interval is more than 12,000 or less than 10,500 microseconds, adjust COARSE DELAY H-PRR MAX. control until delay marker appears between 11,000 and 11,500 microseconds. Repeat steps r and s until delay range is correct.

t. Place PRR switch at position L. If variable delay marker appears on trace with coarse delay and fine delay controls both in clockwise position, slowly turn COARSE DELAY-PRR MIN. control to a point slightly beyond where delay marker disappears.

u. Rotate coarse delay control to maximum counterclockwise position; 12 to 15, 1000-microsecond intervals should appear between variable delay marker and extreme right end of trace. If this time interval is more than 15,000, or less than 12,000 microseconds, adjust COARSE DELAY-PRR MAX. screwdriver control until delay marker appears between 13,500 and 14,000 microseconds. Repeat steps t and u until delay range is correct.

v. Place function switch at position 5. If no traces appear, adjust brilliance screwdriver control until traces appear. Readjust focus control until traces appear sharp and clear.

w. If length of traces is incorrect adjust FA. SW. AMPL. screwdriver control until traces cover the approximate diameter of screen.

x. Center the traces horizontally by adjusting FA. SW. H. CENT. screwdriver control until traces are properly centered. Repeat steps w and x until length and centering of traces is correct.

y. Check that heights of markers permit easy identification by adjusting MARKER AMPL. screwdriver control.

z. Adjust cross hair screwdriver control until cross hair is about 1/8 inch from upper trace.

aa. Observe lower trace. Five 10-microsecond intervals should appear between 50-microsecond markers.

ab. Observe upper trace. Two 50-microsecond intervals should appear between 100-microsecond markers.

ac. Observe upper trace. Five 100-microsecond intervals should appear between 500-microsecond markers.

ad. Observe upper trace. Two 500-microsecond intervals should appear between 1000-microsecond markers.

Note

If the number of intervals counted in steps y through ad is incorrect, reject the receiver-indicator and return it to maintenance shop for proper alignment.

ae. Count number of 50-microsecond intervals between cross hair and first station rate marker. Repeat this operation for station rate settings 1 through 7 inclusive. Intervals observed must agree with those listed in step u, paragraph 20–8.

af. Place station rate switch at 4 and move right-left switch to RIGHT. Two 50-microsecond intervals should appear between cross hair and first station rate marker.

ag. Place function switch at position 4. With fine delay control set at maximum clockwsie position rotate coarse delay control until variable delay marker appears between 5000 and 5500 microseconds. Note exact indication of variable marker in microseconds. Place function switch at position 5 and note exact indication of variable marker in microseconds.

ah. Place function switch at position 4 and rotate fine delay control to maximum counterclockwise position. Note exact indication of variable marker in microseconds. Place function switch at position 5 and note exact indication of variable marker in microseconds.

ai. Check that difference in indication of variable marker within steps ag and ah is not less than 700 microseconds nor more than 1500 microseconds. If outside these limits, adjust fine delay screwdriver control to provide a 950 microsecond range as measured in steps ag and ah.

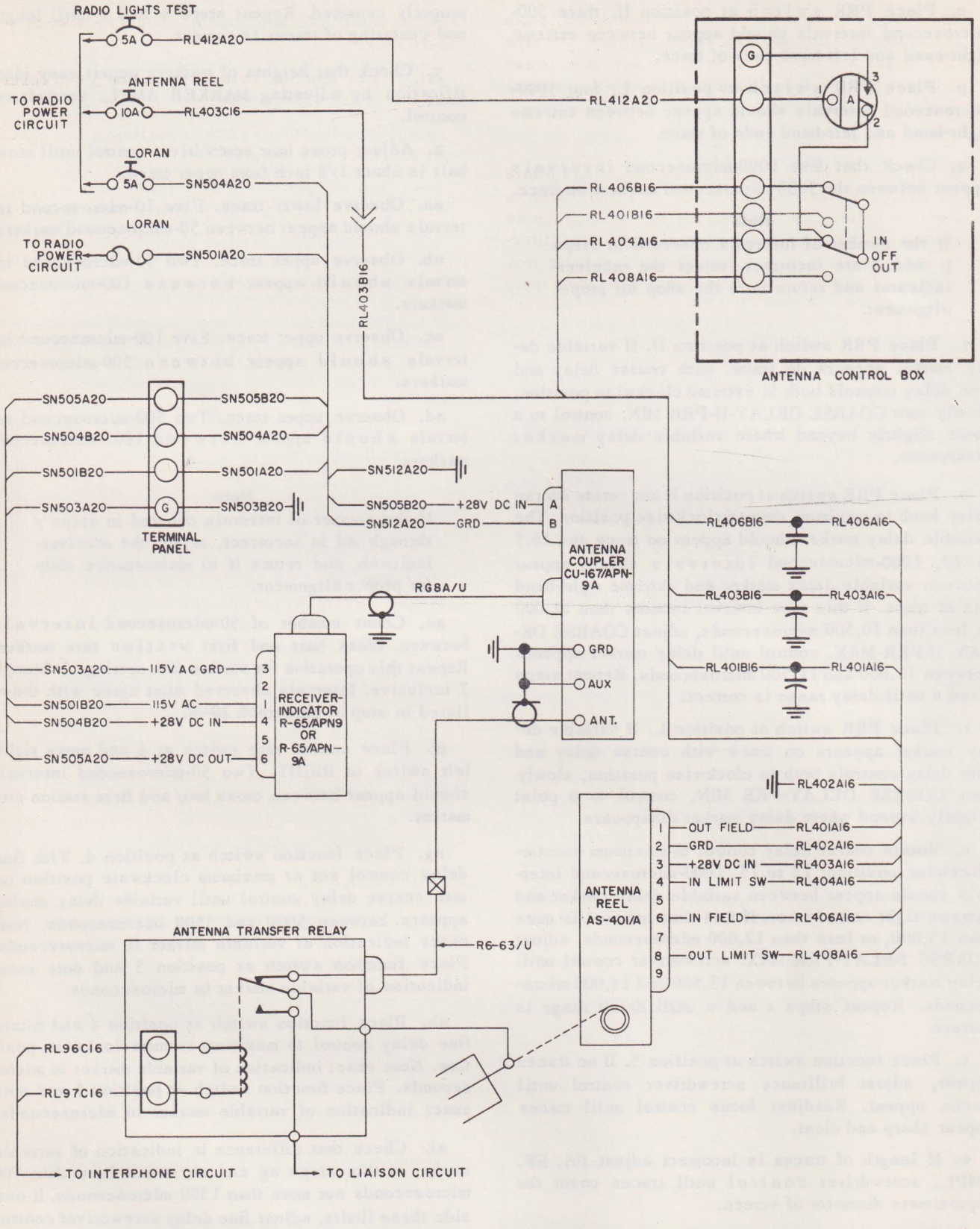

Figure 20–8. Radar Set AN/APN-9 or AN/APN-9A System Intercabling

aj. Place function switch at position 1 and rotate gain control to maximum clockwise position. Observe height of grass on screen of receiver-indicator. Grass should not be less than 1/4-inch high on all positions of R.F. CHANNEL switch.

ak. Place function switch at position 2 and rotate gain control to maximum clockwise position. Observe pattern on indicator screen, noting grass on traces as amplitude balance control is rotated first in one direction and then the other. Grass should disappear from one trace at one limit of rotation and from other trace at other limit. Action of control should be smooth over entire range.

al. Place function switch at position 3 and observe that traces are superimposed.

am. Place function switch at position 6 and observe that two traces are present.

an. Turn equipment off by rotating gain control to maximum counterclockwise position, then attach and clamp antenna cable to antenna connector of receiver-indicator.

ao. Disconnect electrical power source.

SECTION XXI

RADAR SET AN/APS-31 OR AN/APS-31A

21-1. DESCRIPTION AND LEADING PARTICULARS.

21-2. This section comprises maintenance instructions for radar set AN/APS-31 or AN/APS-31A, installed in SA-16A and SA-16B aircraft. (See figure 21-1.) The set is used for determining range and relative azimuth of targets with respect to the position of the aircraft. The set has a minimum range of 200 yards and a maximum range of approximately 200 nautical miles when used in search operation. Principal components of the set are an antenna assembly, receiver-transmitter, indicator, modulator, synchronizer, control unit, gyroscope unit, variable autotransformer, inverter, directional coupler, and a relay box.

21-3. During search operation a train of high frequency pulses of radio energy, of high peak power and short duration, is generated by the transmitter and is radiated into space. When this energy strikes an object having certain characteristics a portion of the energy is reflected from the object back to the source of transmission. This energy is received, and reproduced on a cathode-ray tube indicator, which is calibrated to provide indication of the distance to the object under observation. Transmission of radio pulses and reception of echo signals is accomplished on the same antenna. The antenna is switched back and forth between the transmitting and receiving circuits by an electronic switching device. The antenna reflector is automatically moved upward or downward, to compensate for changes in aircraft attitude, by the gyro-stabilizer assembly. This eliminates the loss of signals during tilt and roll maneuvers of the aircraft. After the echo signals are received, detected and amplified they are displayed on the indicator screen as illuminous patterns. These patterns are produced by a moving sweep line. During beacon operation, the pulses transmitted by the radar set are received by the beacon station. These pulses automatically trigger a beacon transmitter, which sends out coded signals. These signals are received by the radar set and displayed on the indicator screen. Distance from the aircraft to the beacon station is determined in the same manner as in search operation. Figure 21-2 illustrates complete system data flow.

21-4. ANTENNA ASSEMBLY AS-287/APS-31 OR AS-287B/APS-31. (See figure 21-3.) The antenna assembly consists of the antenna, the azimuth drive mechanism and tilt servo unit, servo amplifier, azimuth sweep synchro, azimuth-marker synchro, resolver synchro, carbon pile regulator, pressurizing unit, and antenna relay box. The antenna assembly is located in the bow radome.

21-5. RECEIVER-TRANSMITTER RT-101A/APS-31 OR RT-193/APS-31A. (See figure 21-3.) The receiver-transmitter contains the transmitting section, receiver, and automatic frequency control (AFC) circuits of the radar set. The receiver-transmitter is contained in an airtight housing which is automatically pressurized by a pressurizing unit. The receiver-transmitter is attached to the antenna assembly in the bow radome.

21-6. INDICATOR ID-162/APS-31. (See figure 21-3.) The indicator provides plan-position indication (PPI) of radar echoes and beacon signals. Operating controls for adjusting the indicator are located around the perimeter of the indicator. These controls are labeled for identification and adjustment. The indicator is located at the radar-navigator's station on the first shelf.

21-7. MODULATOR MD-60A/APS-31. (See figure 21-3.) The modulator furnishes pulsed power to the receiver-transmitter, high voltage to the indicator, and other regulated and unregulated D-C voltages for the synchronizer, indicator, and certain circuits of the receiver-transmitter and antenna assemblies. The modulator is housed in an airtight case which is pressurized to five PSI by an external dry-air pump. The modulator is located at the radar-navigator's station under the bottom shelf.

21-8. SYNCHRONIZER SN-36A/APS-31. (See figure 21-3.) The synchronizer contains the circuits which control the basic timing of the entire radar set. Adjustment controls on the synchronizer are labeled for identification and their intended function. The synchronizer is located at the radar-navigator's station on the second shelf.

21-9. CONTROL UNIT C-289/APS-31 OR C-729/APS-31A. (See figure 21-3.) The control unit, located at the radar-navigator's station, contains controls for operating the radar set. Each control is labeled for identification and function.

21-10. GYROSCOPE UNIT CN-51/APS-31. (See figure 21-3.) The gyroscope unit supplies roll and

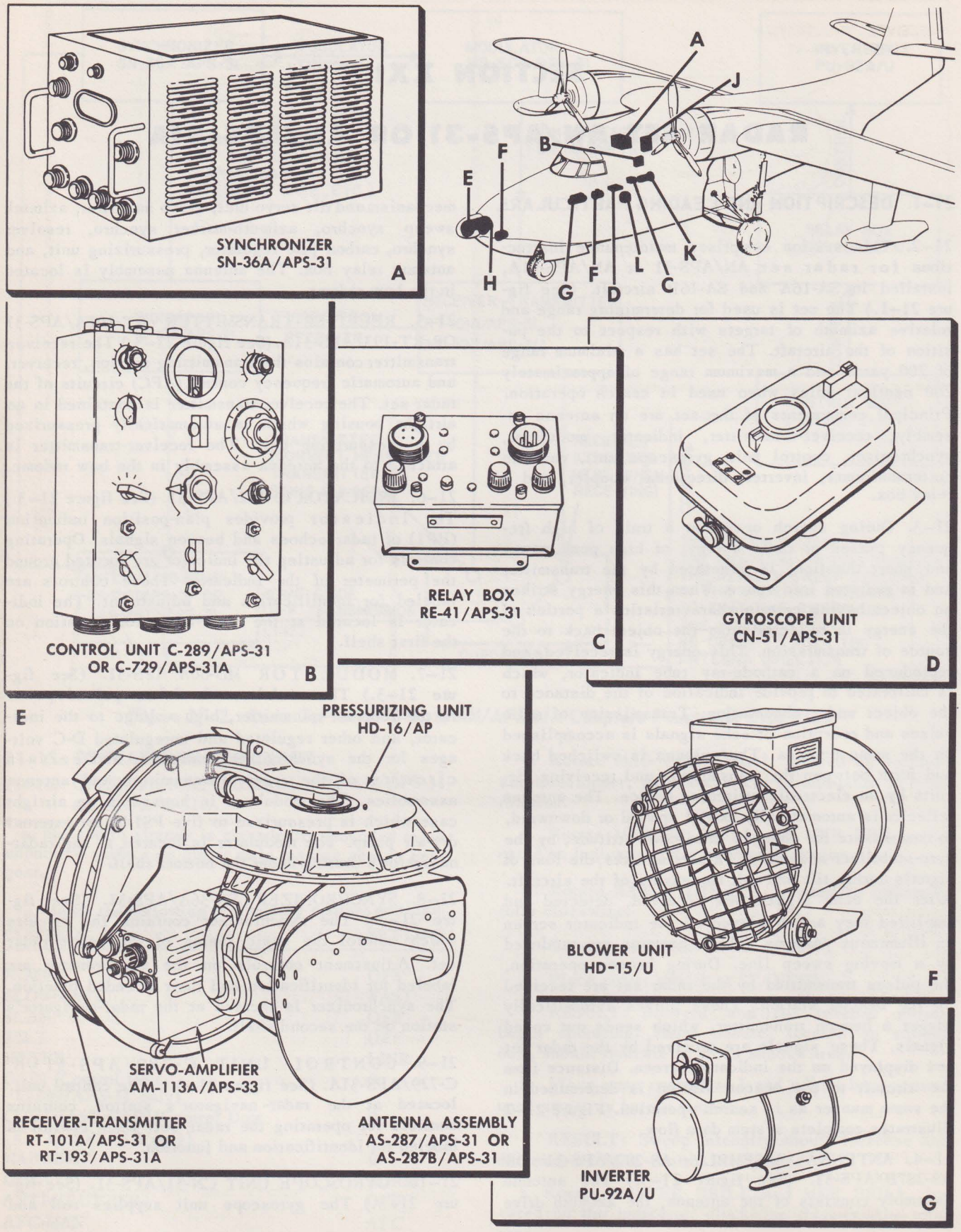

Figure 21–1. Radar Set AN/APS-31 or AN/APS-31A Component Locations (Sheet 1 of 2)

3.2.0-10-98A

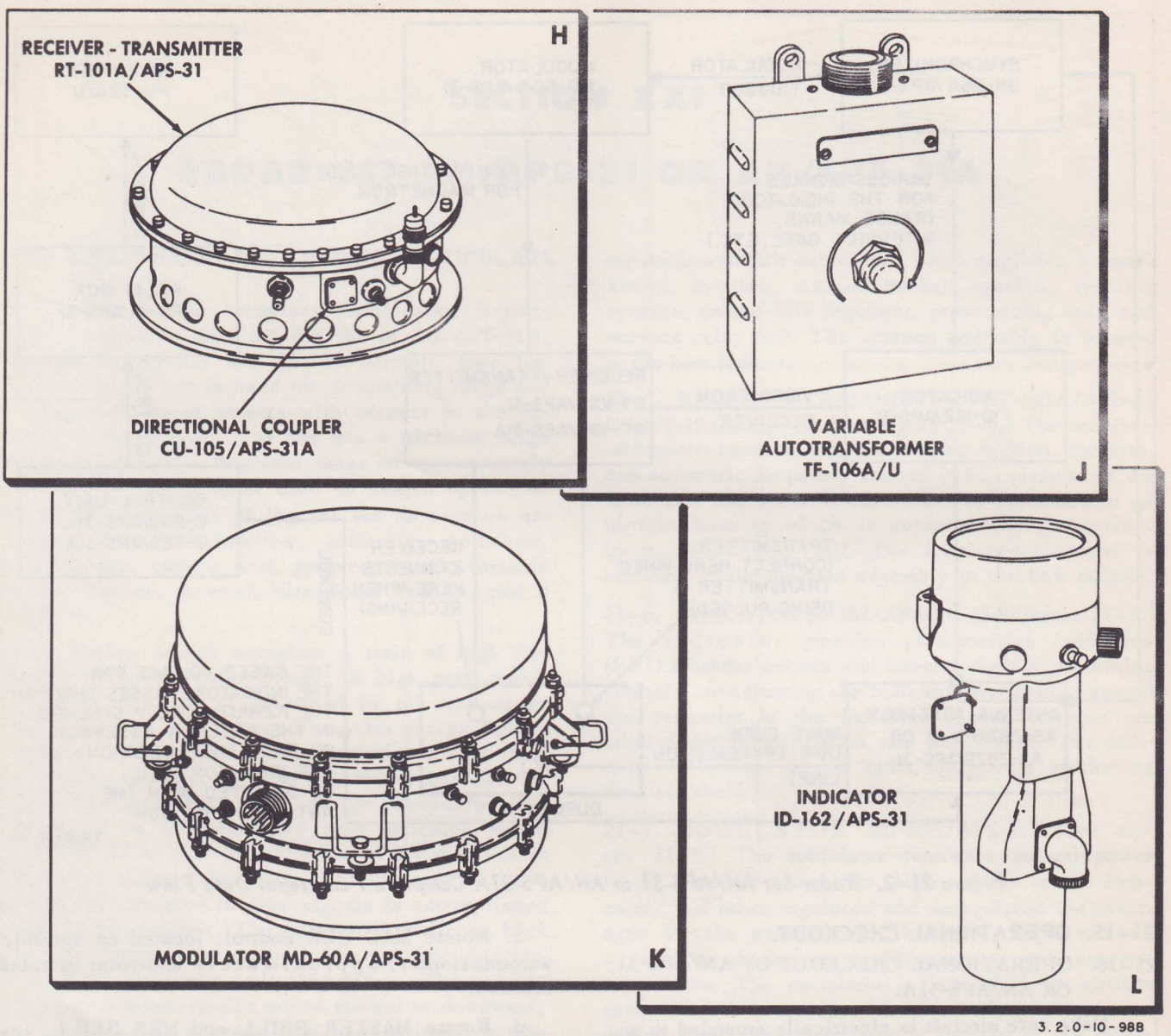

Figure 21–1. Radar Set AN/APS-31 or AN/APS-31A Component Locations (Sheet 2 of 2)

pitch reference signals to the antenna tilt correction circuits in the servo amplifier. These signals cause the antenna to be stabilized about the vertical axis for normal pitch and roll movements of the aircraft. The gyroscope unit is located at the radar-navigator's station, under the bottom shelf.

21–11. VARIABLE AUTOTRANSFORMER TF-106A/U. (See figure 21–3.) The variable autotransformer permits voltage control of the AC input to the high voltage power supply in the modulator. The transformer contains a single control knob for this purpose. The transformer is located at the radar-navigator's station on the second shelf.

21–12. INVERTER PU-92A/U. (See figure 21–3.) The inverter supplies 115-volt, three-phase power to the tilt stabilization and control system. The inverter is located at fuselage station 150.

21–13. DIRECTIONAL COUPLER CU-105/APS-31A. (See figure 21–3.) The coupler is the waveguide connecting link between the antenna and receiver-transmitter. The output fitting provides connection for various test equipment.

21–14. RELAY BOX RE-41/APS-31. (See figure 21–3.) The relay box controls the starting of the inverter. It contains a starting relay, thermal-overload circuit breaker, and two protective fuses. The relay box is located adjacent to the modulator.

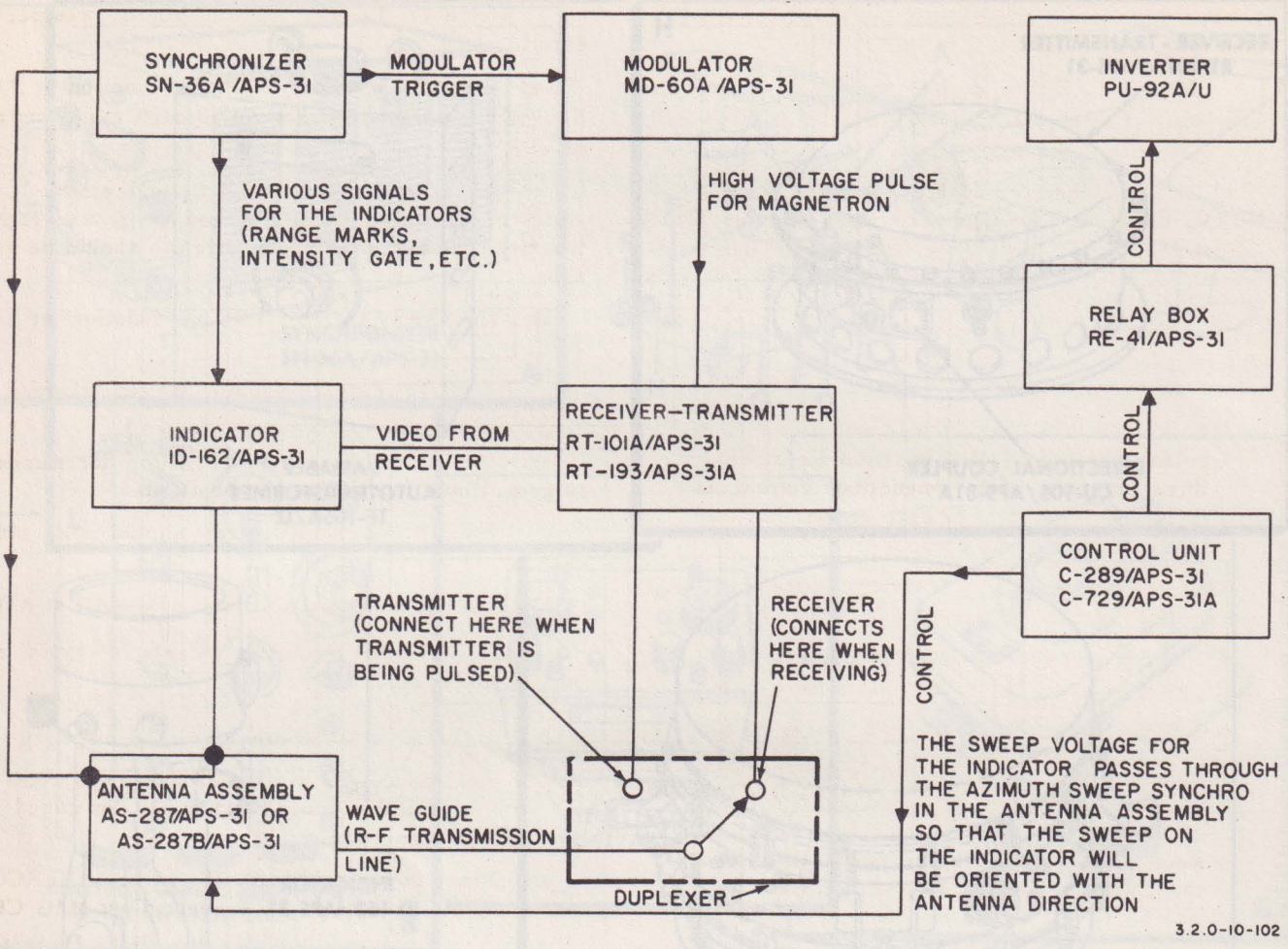

Figure 21–2. Radar Set AN/APS-31 or AN/APS-31A Complete Functional Data Flow

21–15. OPERATIONAL CHECKOUT.

21–16. OPERATIONAL CHECKOUT OF AN/APS-31 OR AN/APS-31A.

a. Make sure aircraft is electrically grounded to an unpainted surface on either main landing gear or nose gear.

b. Make the following preliminary control settings.

CONTROL	SETTING
POWER	OFF
SLOW-FAST	FAST
SCAN	OFF
TILT	OFF
METER	LINE
GAIN (Control Unit C-289/APS-31 only)	0
CONTRAST-GAIN (Control Unit C-729/APS-31A only)	0
MARKER	0
DELAY	NORM
ANTI-CLUTTER	OFF
AFC-MAN	AFC

c. Rotate MAG CUR control. located on variable autotransformer, approximately mid-point of total rotation.

d. Rotate MASTER BRILL and MKR BRILL, located on indicator, fully counterclockwise.

e. Rotate RANGE LTS INT, located on indicator, fully clockwise.

f. Connect electrical power source.

g. Place power switch at STANDBY.

RESULT: Blowers and tilt inverter should begin operating. Meter needle, located on control unit, should indicate in green shaded area.

h. Place scan control at 1 and adjust bias control until sweep is barely visible.

RESULT: Sweep intensity should increase and decrease as BIAS control is adjusted.

i. Rotate MASTER BRILL and MKR BRILL, located on the indicator, clockwise three-fourths total range.

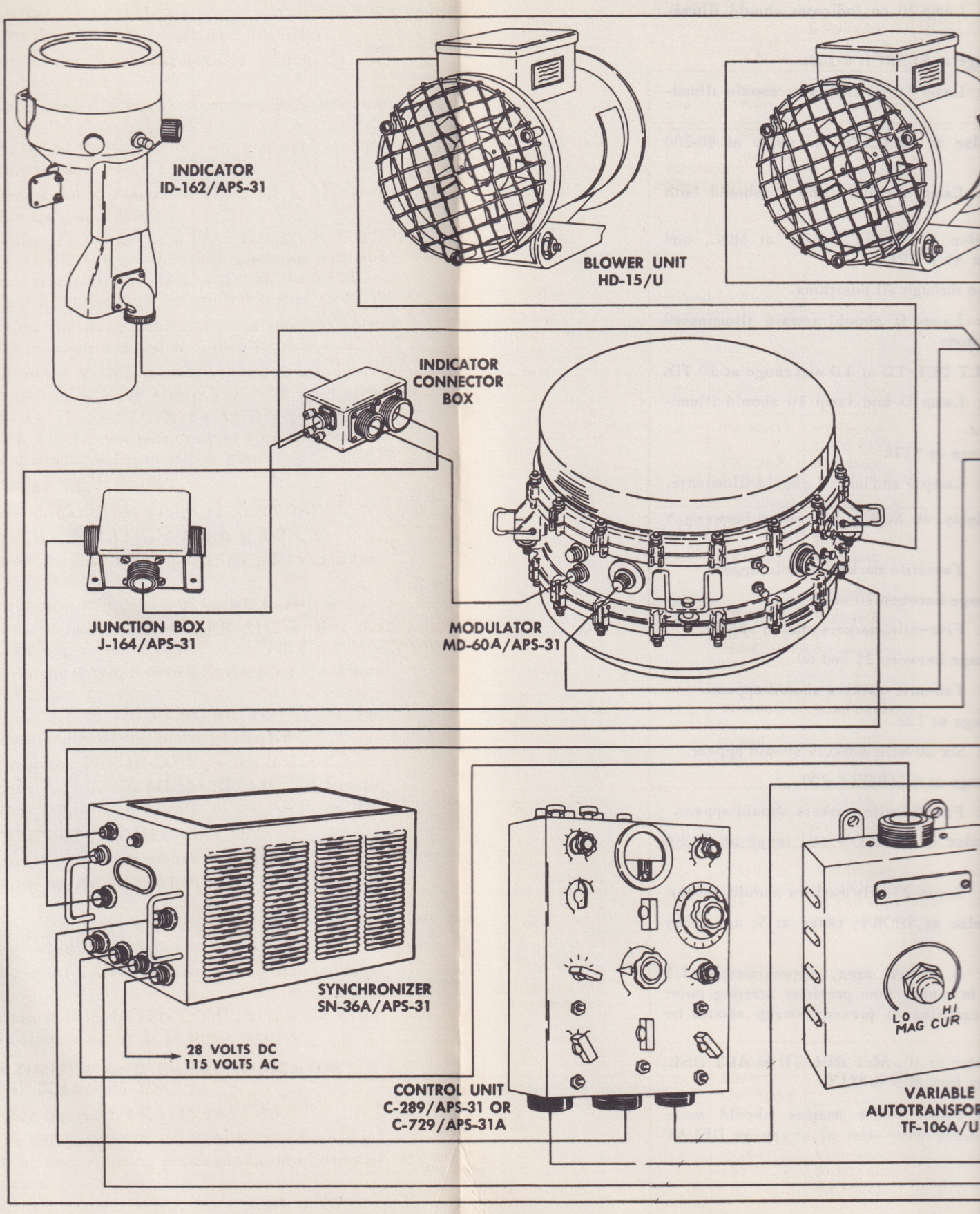

Figure 21–3. Radar Set AN/APS-31 or AN/APS-31A Cabling Diagram

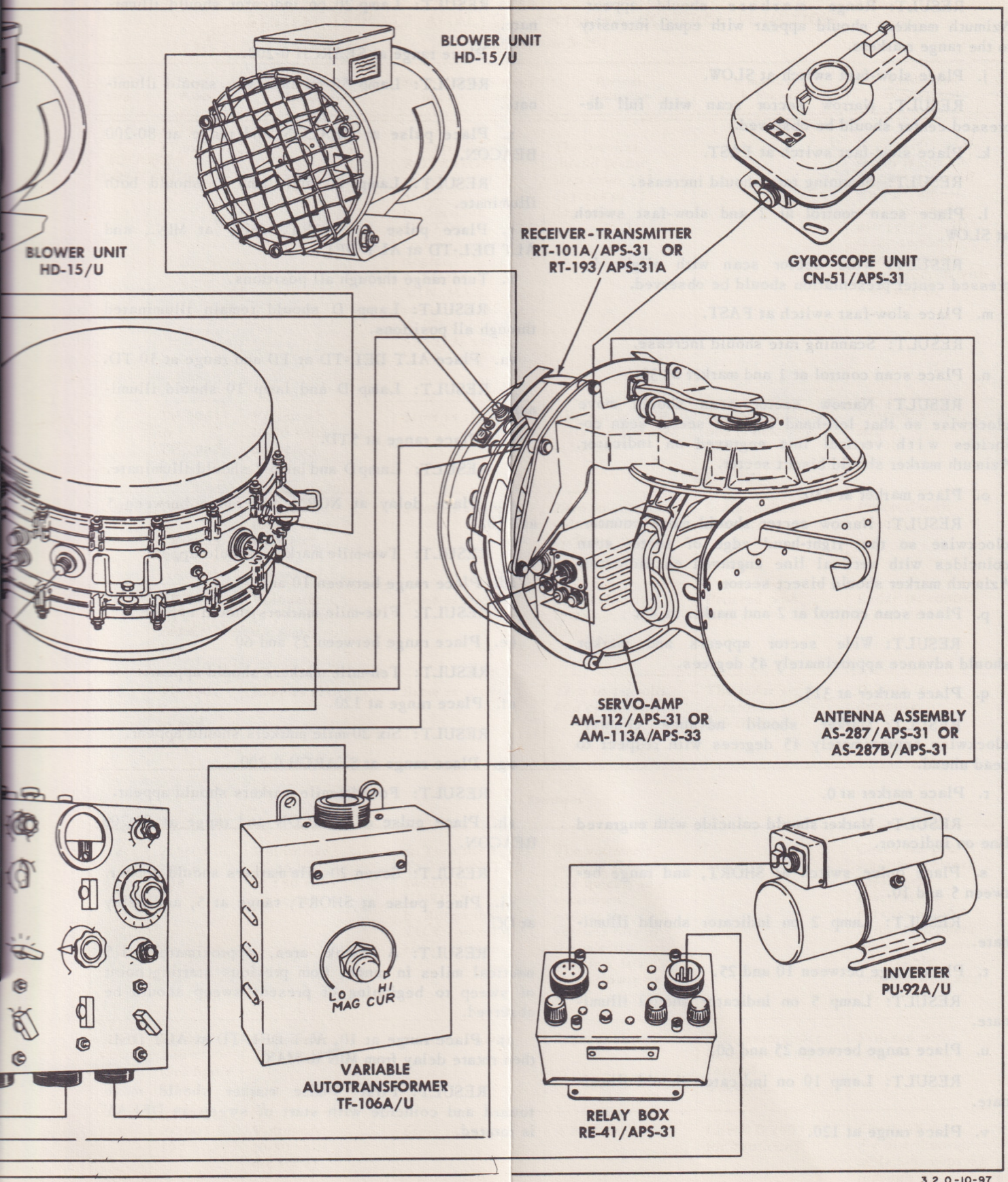

3.2.0-10-97

S-31A Cabling Diagram

RESULT: Range markers should appear. Azimuth markers should appear with equal intensity to the range markers.

j. Place slow-fast switch at SLOW.

RESULT: Narrow sector scan with full depressed center should be observed.

k. Place slow-fast switch at FAST.

RESULT: Scanning rate should increase.

l. Place scan control at 2 and slow-fast switch at SLOW.

RESULT: Wide sector scan with slight depressed center presentation should be observed.

m. Place slow-fast switch at FAST.

RESULT: Scanning rate should increase.

n. Place scan control at 1 and marker at 30.

RESULT: Narrow sector scan should move clockwise so that left-hand edge of sector scan coincides with vertical line engraved on indicator. Azimuth marker should bisect sector.

o. Place marker at 330.

RESULT: Narrow sector should move counterclockwise so that right-hand edge of sector scan coincides with vertical line engraved on indicator. Azimuth marker should bisect sector.

p. Place scan control at 2 and marker at 45.

RESULT: Wide sector appears and marker should advance approximately 45 degrees.

q. Place marker at 315.

RESULT: Marker should advance counterclockwise approximately 45 degrees with respect to dead ahead.

r. Place marker at 0.

RESULT: Marker should coincide with engraved line on indicator.

s. Place pulse switch at SHORT, and range between 5 and 10.

RESULT: Lamp 2 on indicator should illuminate.

t. Place range between 10 and 25.

RESULT: Lamp 5 on indicator should illuminate.

u. Place range between 25 and 60.

RESULT: Lamp 10 on indicator should illuminate.

v. Place range at 120.

RESULT: Lamp 20 on indicator should illuminate.

w. Place range at SEARCH 0-200.

RESULT: Lamp 50 on indicator should illuminate.

x. Place pulse at BEACON and range at 80-200 BEACON.

RESULT: Lamp 20 and lamp D should both illuminate.

y. Place pulse at SHORT, delay at MIN., and ALT DEL-TD at ALT DEL.

z. Turn range through all positions.

RESULT: Lamp D should remain illuminated through all positions.

aa. Place ALT DEL-TD at TD and range at 30 TD.

RESULT: Lamp D and lamp 10 should illuminate.

ab. Place range at 5TD.

RESULT: Lamp D and lamp 2 should illuminate.

ac. Place delay at NORM and range between 5 and 10.

RESULT: Two-mile markers should appear.

ad. Place range between 10 and 25.

RESULT: Five-mile markers should appear.

ae. Place range between 25 and 60.

RESULT: Ten-mile markers should appear.

af. Place range at 120.

RESULT: Six 20-mile markers should appear.

ag. Place range at SEARCH 0-200.

RESULT: Four 50-mile markers should appear.

ah. Place pulse at BEACON and range at 80-200 BEACON.

RESULT: Seven 20-mile markers should appear.

ai. Place pulse at SHORT, range at 5, and delay at OC.

RESULT: A blank area, approximately 1.5 nautical miles in range, from previous starting point of sweep to beginning of present sweep should be observed.

aj. Place range at 10, ALT DEL-TD at ALT DEL, then rotate delay from MIN to MAX.

RESULT: First 5-mile marker should move toward and coincide with start of sweep as DELAY is rotated.

ak. Place range at SEARCH 0-200, ALT DEL-TD, then rotate delay from MIN to MAX.

RESULT: Delay marker should move outward from start of sweep, and at MAX should coincide with fourth 50-mile range marker.

al. Place meter at MAG, range at 5, delay at NORM, power at RUN and wait three minutes. Then adjust MAG CUR located on the variable autotransformer, for 6 MA on 0-20 scale.

CAUTION

Equipment must be allowed to operate with pulse switch in LONG position for at least three minutes after magnetron current is indicated on meter. Failure to do this may cause damage to the equipment.

am. Place power at STANDBY, pulse at LONG, then power at RUN. Adjust MAG CUR for 13.5 MA.

an. Place power at STANDBY, pulse to BEACON, then power at RUN. Adjust MAG CUR for 13.5 MA.

ao. Place power at STANDBY, pulse at SHORT, then power at RUN. Adjust MAG CUR for 6 MA.

Note

When suitable targets are not available for the following steps, an echo box such as TS-488/UP or TS-62/AP may be employed.

ap. Place meter at XTAL, AFC-MAN at MAN and adjust tuning for maximum crystal current as indicated by meter.

RESULT: Meter should indicate approximately 0.6 MA on 0-1.0 scale.

aq. (AN/APS-31 only.) Place gain at 5, scan at 1 or 2, and range between 5 and 10. Check for nearby targets.

ar. (AN/APS-31A only.) Place function at LIN, contrast-gain at 10, scan at 1 or 2, and range between 5 and 10. Check for nearby targets.

RESULT: Crystal current should fall within 0.15 MA of 6 MA.

as. (AN/APS-31A only.) Set tuning for maximum targets.

at. (AN/APS-31 only.) Place AFC-MAN at AFC.

RESULT: No change in targets or crystal current should occur.

au. (AN/APS-31A only.) Place function at LIN FTC.

RESULT: Targets should appear sharper in detail.

av. (AN/APS-31A only.) Place function at LOG and vary contrast-gain control through range starting at 0.

RESULT: Target should be discernible even when accompanied by heavy sea or ground return. Density of heavy sea or ground return should be variable.

aw. (AN/APS-31A only.) Place function at LOG FTC.

RESULT: Target should appear sharper in detail.

ax. (AN/APS-31A only.) Set tuning for maximum targets. Place function at any position.

RESULT: Crystal current should fall within 0.15 MA of 0.6 MA.

ay. (AN/APS-31A only.) Place AFC-MAN at AFC.

RESULT: No change in targets or crystal current should occur.

Note

If local beacon is available, turn range control to suitable range, and check for coded beacon signals.

az. Place power at STANDBY, pulse at BEACON, meter at MAG, power at RUN, and adjust MAG CUR, located on auto transformer, for meter reading of 13.5 MA on 0-20 scale.

ba. Place AFC-MAN at MAN, scan at 2, meter at XTAL, and adjust tuning for maximum crystal current.

RESULT: Reading should be greater than 0.125 MA on 0-1.0 scale.

bb. Place AFC-MAN at AFC.

RESULT: Crystal current reading should remain the same as in step ba.

bc. Place range between 5 and 10, meter at MAG, pulse at SHORT, and adjust MAG CUR, located on variable auto transformer, for meter reading of 6 MA on 0-20 scale.

bd. Place scan at 1 or 2, and slowly vary tilt from – 20 to + 10.

RESULT: Targets should decrease in number and intensity as tilt is rotated. Targets should reappear as antenna reflector is raised.

be. (AN/APS-31 only.) Rotate gain clockwise until targets and noise begin to saturate indicator, and place anti-clutter at A.

RESULT: Targets should appear sharp and well defined, and noise should disappear.

Note

Weak targets appearing on the indicator of AN/APS-31 with the anti-clutter switch at OFF may disappear when the anti-clutter switch is placed at any of the three positions, A, B, or C.

bf. (AN/APS-31 only.) Place anti-clutter to B and C.

RESULT: Targets should appear sharp and well defined, with a shadow behind, noise does not appear.

bg. (AN/APS-31 only.) Place gyro at UNCAGE, and observe through window on top of gyro unit.

RESULT: Gyro should be erect and rotating.

bh. Place gyro at CAGE, anti-clutter at OFF, MASTER BRILL and MKR BRILL fully counterclockwise.

bi. Place power at OFF.

bj. Disconnect electrical power source.

21-17. SYSTEM ANALYSIS.

TEST EQUIPMENT REQUIRED

Figure and Index NO.	Name	Type Designation	Alternate	Use and Application
(None)	MULTIMETER	AN/PSM-6	Multimeter, Federal Stock NO. 6625-649-4593	Troubleshooting radar set AN/APS-31 or AN/APS-31A.

21-18. TROUBLESHOOTING AN/APS-31 OR AN/APS-31A. (See figures 21-4 and 21-5.)

SYMPTOM	FUNCTIONAL LOOP	KEY TEST POINTS
Complete set inoperative.	Power.	1, 2, 3, 4, 5, 6, 7, 8, 9, 10, 11, 12, 13, 14, 15, 16, 17, 18, 19, 20, 21, 22, 23, 24, 25, 26, 27, 28, 29, 30, 31, and 32
Sweep does not appear on the indicator for any range setting.	Indicator. Synchronizer.	
Range markers not present.	Synchronizer.	
Indicator does not provide normal indication.	Receiver-transmitter.	
Poor target presentation or no receiver gain.	Receiver-transmitter.	
No echo presentation or noise on indicator.	Synchronizer.	
Indicator presentation too bright or dim, bias control has no effect.	Indicator.	
No antenna stabilization.	Servo amplifier.	

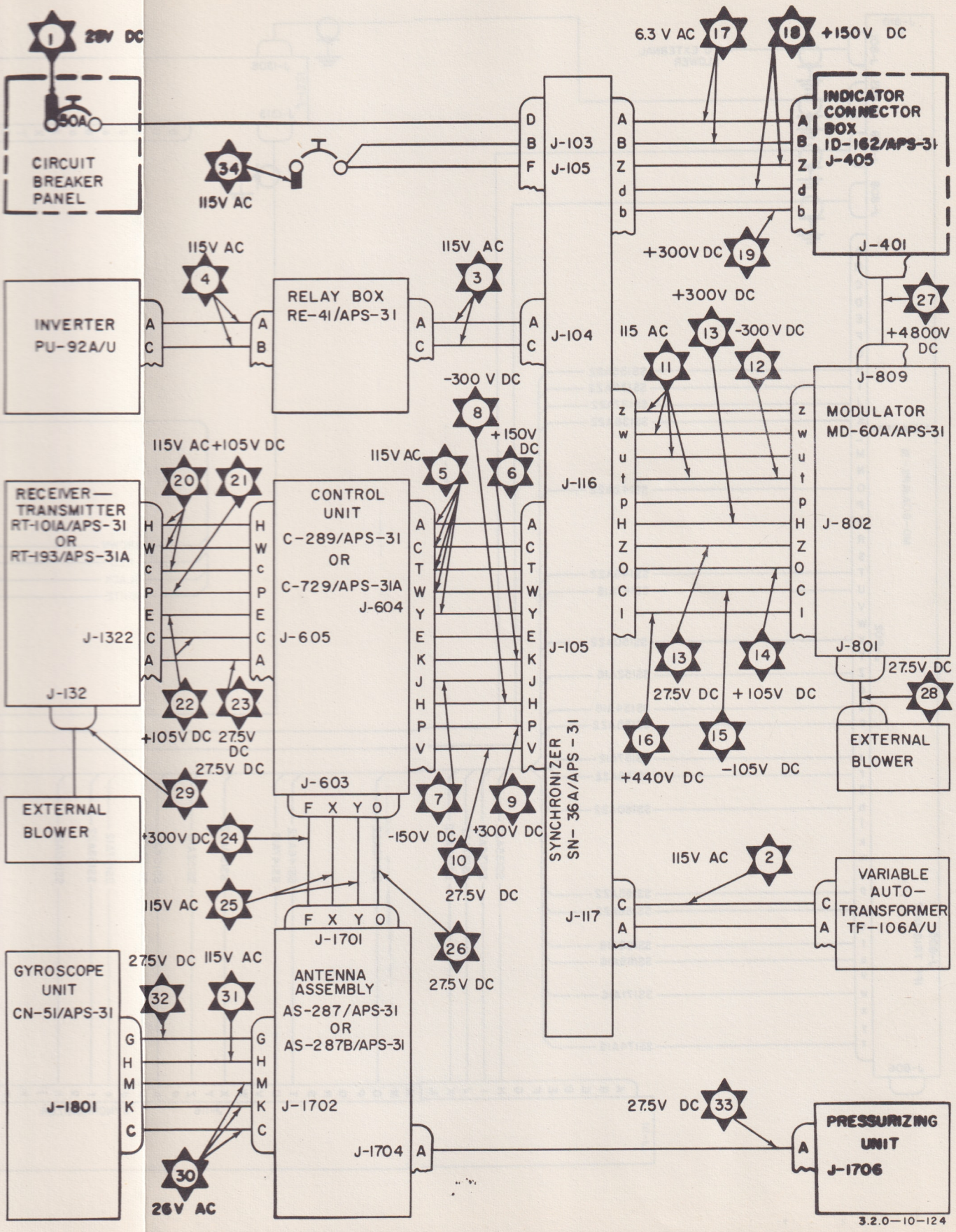

Figure 21–4. Radar Set AN/APS-31 or AN/APS-31A Power Distribution, Connection to Aircraft

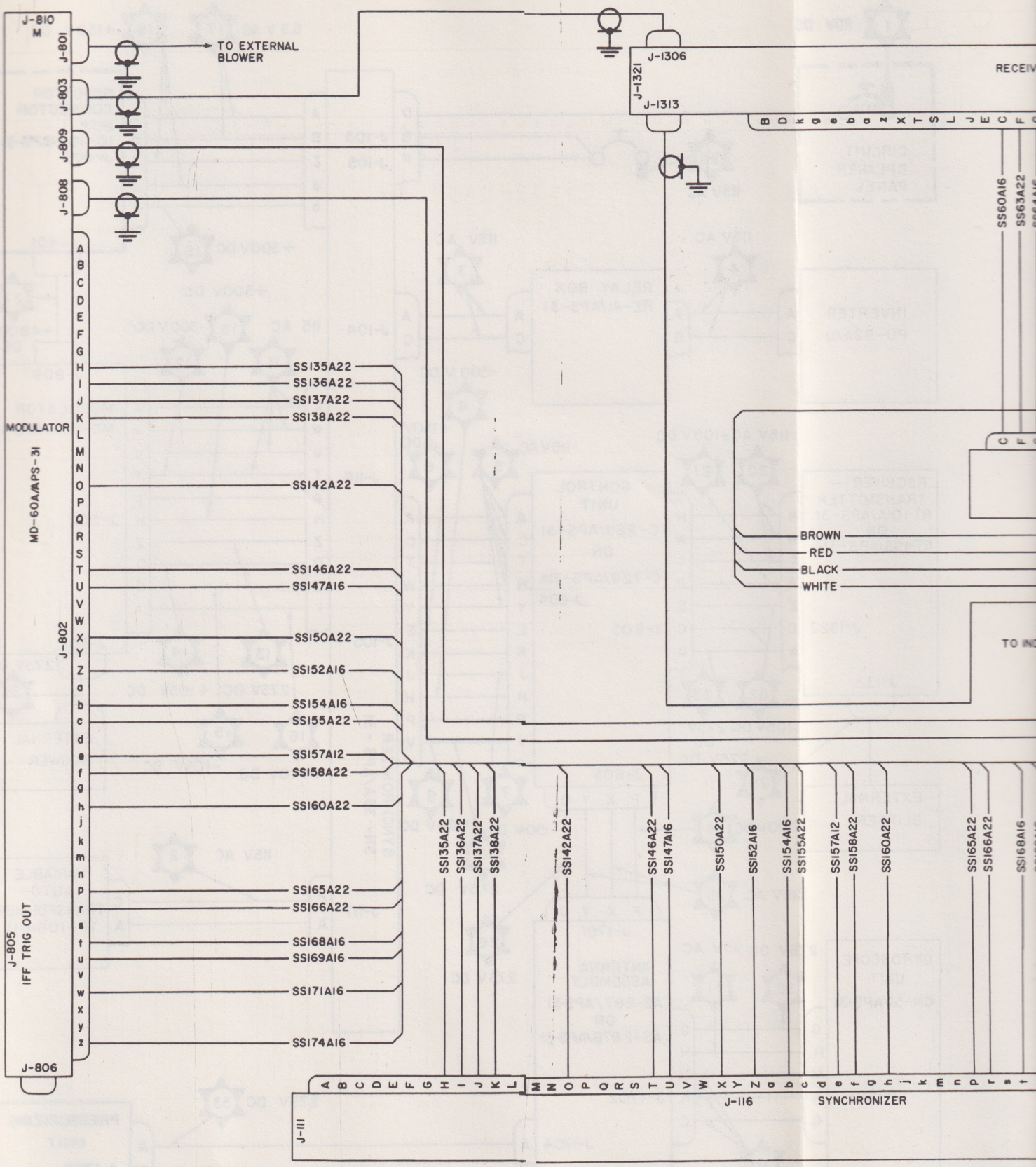
J-810
M
J-801
J-803
J-809
J-808
TO EXTERNAL BLOWER
J-1306
J-1321
J-1313
RECEIV
SS60A16
SS63A22
MODULATOR
MD-60A/APS-31
J-802
SS135A22
SS136A22
SS137A22
SS138A22
SS142A22
SS146A22
SS147A16
SS150A22
SS152A16
SS154A16
SS155A22
SS157A12
SS158A22
SS160A22
SS165A22
SS166A22
SS168A16
SS169A16
SS171A16
SS174A16
BROWN
RED
BLACK
WHITE
TO IN
J-805
IFF TRIG OUT
J-806
J-111
J-116
SYNCHRONIZER

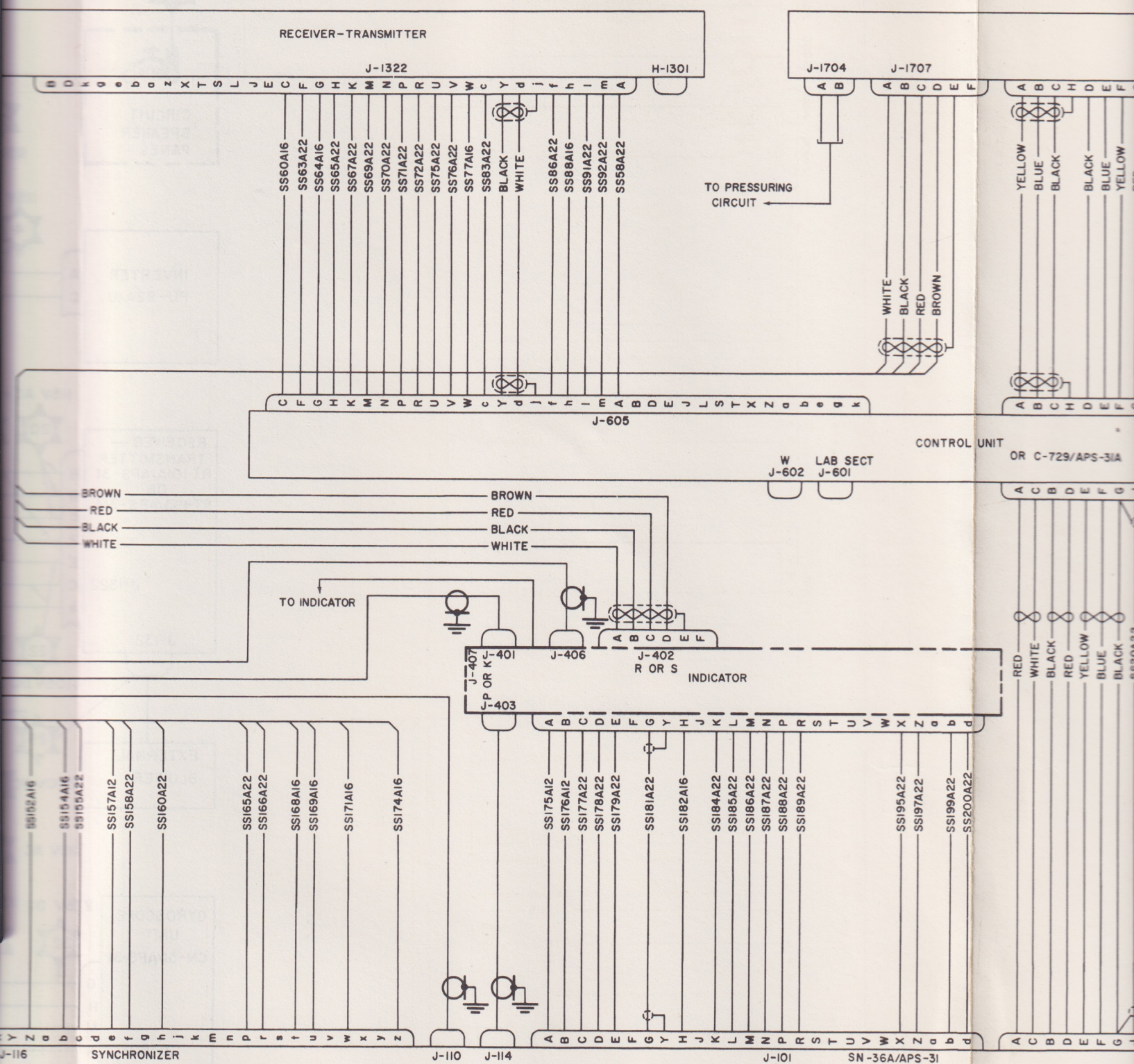
RECEIVER-TRANSMITTER
J-1322
H-1301
J-1704
J-1707
TO PRESSURING CIRCUIT
SS60AI6
SS63A22
SS64AI6
SS65A22
SS67A22
SS69A22
SS70A22
SS71A22
SS72A22
SS75A22
SS76A22
SS77AI6
SS83A22
BLACK
WHITE
SS86A22
SS88AI6
SS91A22
SS92A22
SS58A22
WHITE
BLACK
RED
BROWN
YELLOW
BLUE
BLACK
BLACK
BLUE
YELLOW
J-605
CONTROL UNIT
OR C-729/APS-31A
W J-602
LAB SECT J-601
BROWN
RED
BLACK
WHITE
TO INDICATOR
J-407
J-P OR K
J-401
J-406
J-402
R OR S
INDICATOR
J-403
RED
WHITE
BLACK
RED
YELLOW
BLUE
BLACK
SSI52AI6
SSI54AI6
SSI55A22
SSI57AI2
SSI58A22
SSI60A22
SSI65A22
SSI66A22
SSI68AI6
SSI69AI6
SSI71AI6
SSI74AI6
SSI75AI2
SSI76AI2
SSI77A22
SSI78A22
SSI79A22
SSI81A22
SSI82AI6
SSI84A22
SSI85A22
SSI86A22
SSI87A22
SSI88A22
SSI89A22
SSI95A22
SSI97A22
SSI99A22
SS200A22
J-116
SYNCHRONIZER
J-110
J-114
J-101
SN-36A/APS-31

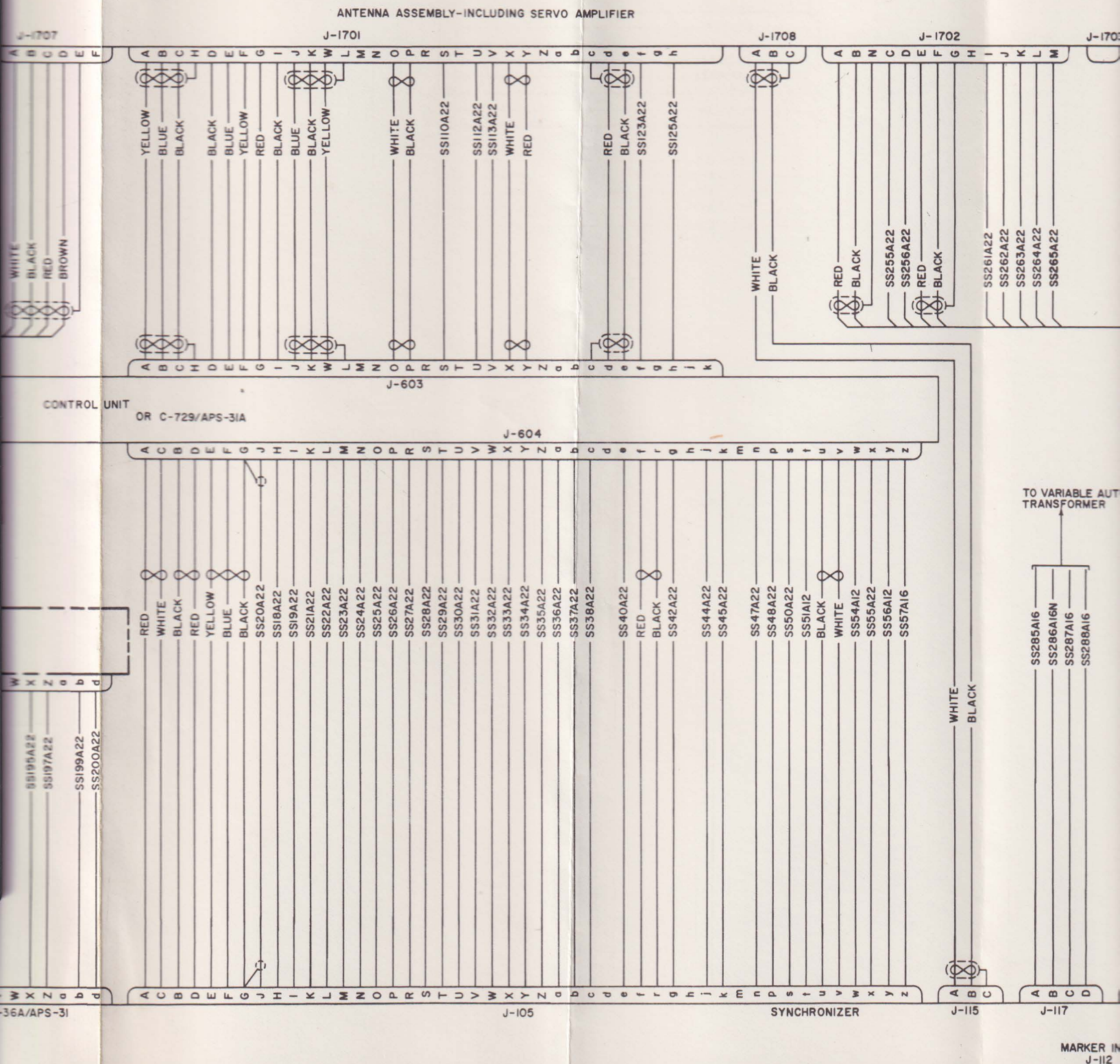

Figure 21-5. Radar Set AN

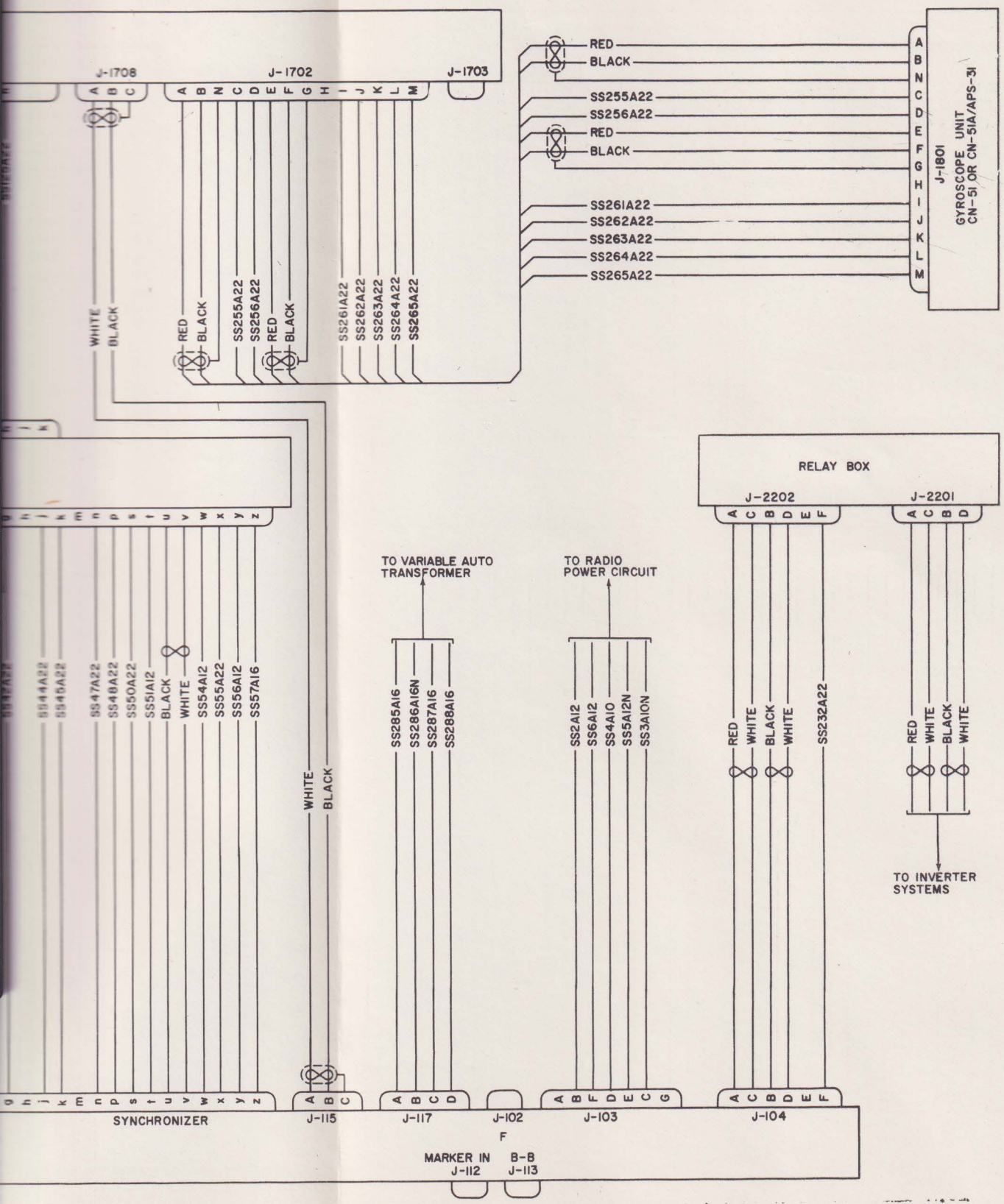

Figure 21-5. Radar Set AN/APS-31 or AN/APS-31A System Intercabling

3.2.0-10-114

21–19. REMOVAL AND REPLACEMENT.

21–20. REMOVAL OF BOW RADOME.

a. Support bow radome and remove attaching screws.

b. Remove bow radome being careful to avoid undue strain on nose cap of aircraft.

21–21. REPLACEMENT OF BOW RADOME.

a. Inspect rubber seal for signs of tears, cracks, and hardness. If seal is to be replaced, remove old seal and clean ring thoroughly.

b. Cement new seal to ring.

c. Dust exposed surface of seal with powdered graphite and secure radome to hull with attaching screws. Screws should be tightened to a torque value of 20 to 25 inch-pounds.

21–22. REMOVAL OF ANTENNA AND RECEIVER-TRANSMITTER.

a. Make sure aircraft is electrically grounded to an unpainted surface on either main landing gear or nose gear and all electrical power is OFF.

Note

Two men will be required to support the antenna and receiver-transmitter which weigh approximately 130 pounds.

b. Remove bow radome. (Refer to paragraph 21–20).

c. Remove bow hatch by removing bolt, bushing, washer, and nut at each hinge.

d. Working from inside bow compartment disconnect accessible attaching cables.

e. Remove blower and associated cable from deck bracket by removing attaching screws and loosening strap clamps.

f. Tighten turnbuckle located on top of ring thereby reducing outside diameter ring.

g. Remove screws attaching ring to bow.

h. Support antenna and receiver-transmitter, withdraw it aft into bow compartment and disconnect remaining cables from front of assembly.

i. Attach assembly to a suitable hoist and remove from aircraft.

j. Equipment may be withdrawn externally using two additional men working on a platform with a hoist.

21–23. REPLACEMENT OF ANTENNA AND RECEIVER-TRANSMITTER.

a. Make sure aircraft is electrically grounded to an unpainted surface on either main landing gear or nose gear and all electrical power is OFF.

Note

Two men are required to support the antenna and receiver-transmitter which weigh approximately 130 pounds.

b. Install antenna and receiver-transmitter on ring prior to installing in aircraft.

c. Using a suitable hoist, position antenna and receiver-transmitter and connect cables in their respective places.

d. To insure a snug fit in bow, expand ring by means of turnbuckle.

e. Replace screws attaching ring to bow.

f. Replace blower and associated cable on deck bracket and install attaching screws. Tighten strap clamp.

g. Replace bow hatch by installing bolt, bushing, washer, and nut at each hinge.

h. Replace bow radome. (Refer to paragraph 21–21.)

SECTION XXII

CONTROL KEYER GROUP AN/ARA-26

22–1. DESCRIPTION AND LEADING PARTICULARS.

22–2. This section comprises maintenance instructions for the control keyer group AN/ARN-26, installed in SA-16A and SA-16B aircraft. (See figure 22–1.) The group is an electro-mechanical automatic radio control that will automatically channel the liaison transmitter to an emergency frequency, and key a coded distress signal, when the group is turned on. Principal components of the group are a keyer, and a control panel. Figure 22–2 illustrates complete system data flow.

22–3. KEYER KY-65/ARA-26. (See figure 22–3.) The keyer is a motor-actuated cam and disk apparatus that functions as an automatically operated key. Three disks mounted on a common shaft, with teeth on their outer perimeter, alternately open and close relays that modulate the output of the liaison transmitter. The keyer is located on the bulkhead at station 200 over the radio operator's desk.

22–4. CONTROL PANEL C-790/ARA-26. (See figure 22–3.) The control panel provides remote control of the control keyer. The panel contains a guarded power switch and an indicator light. When the power is at ON, the group operates automatically until turned off. The control panel is located on the top shelf at bulkhead station 200.

22–5. OPERATIONAL CHECKOUT.

22–6. OPERATIONAL CHECKOUT OF AN/ARA-26.

a. Make sure aircraft is electrically grounded to an unpainted surface on either main landing gear or nose gear.

b. Connect electrical power source.

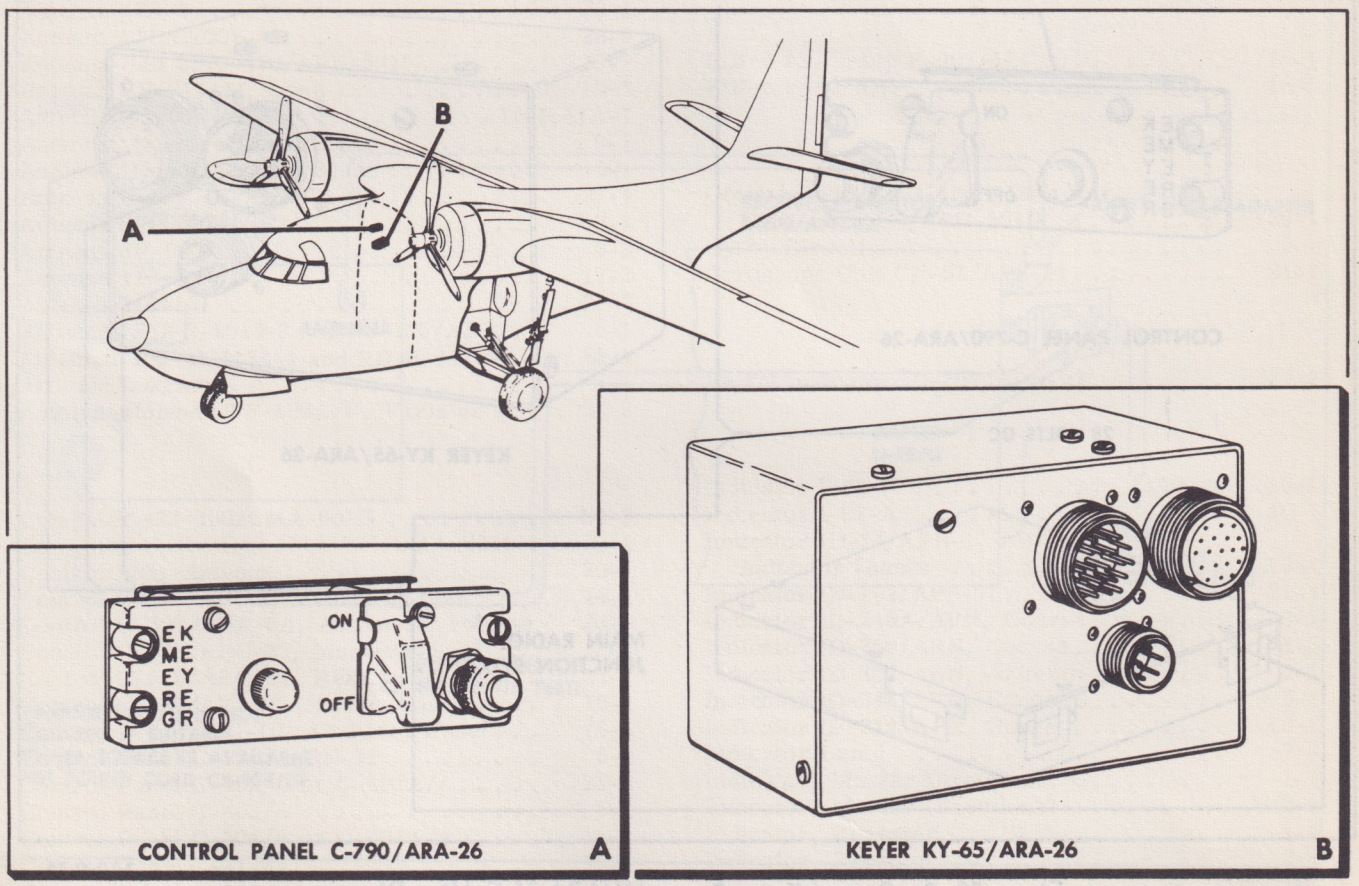

Figure 22–1. Control Keyer Group AN/ARA-26 Component Locations

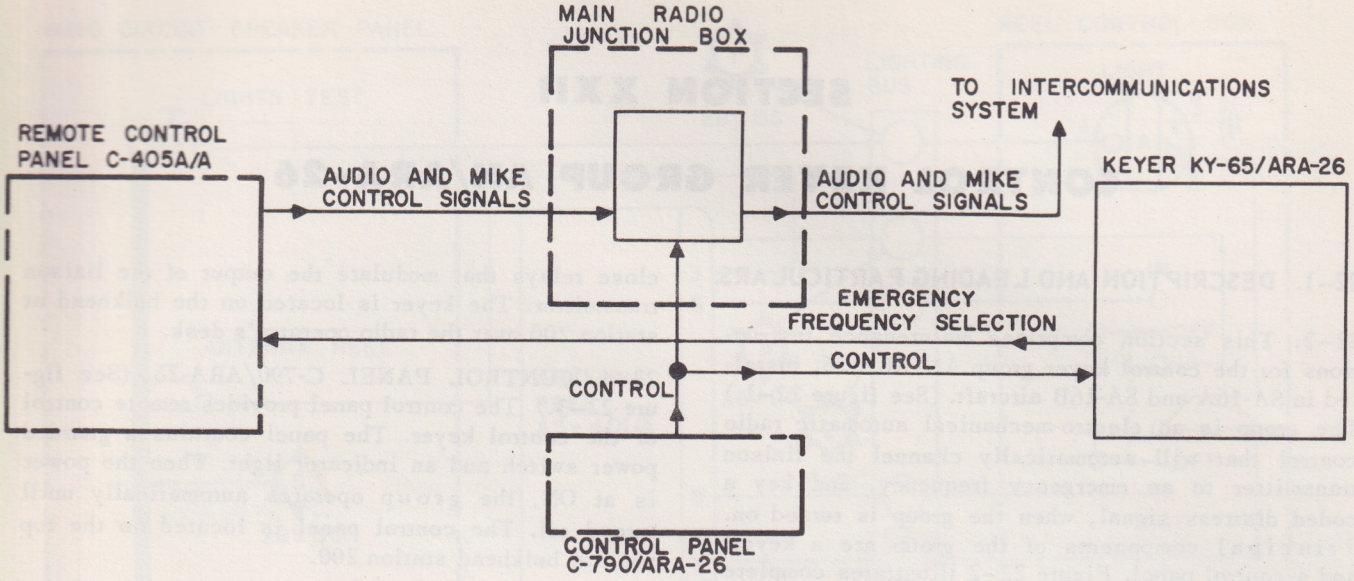

Figure 22–2. Control Keyer Group AN/ARA-26 Complete Functional Data Flow

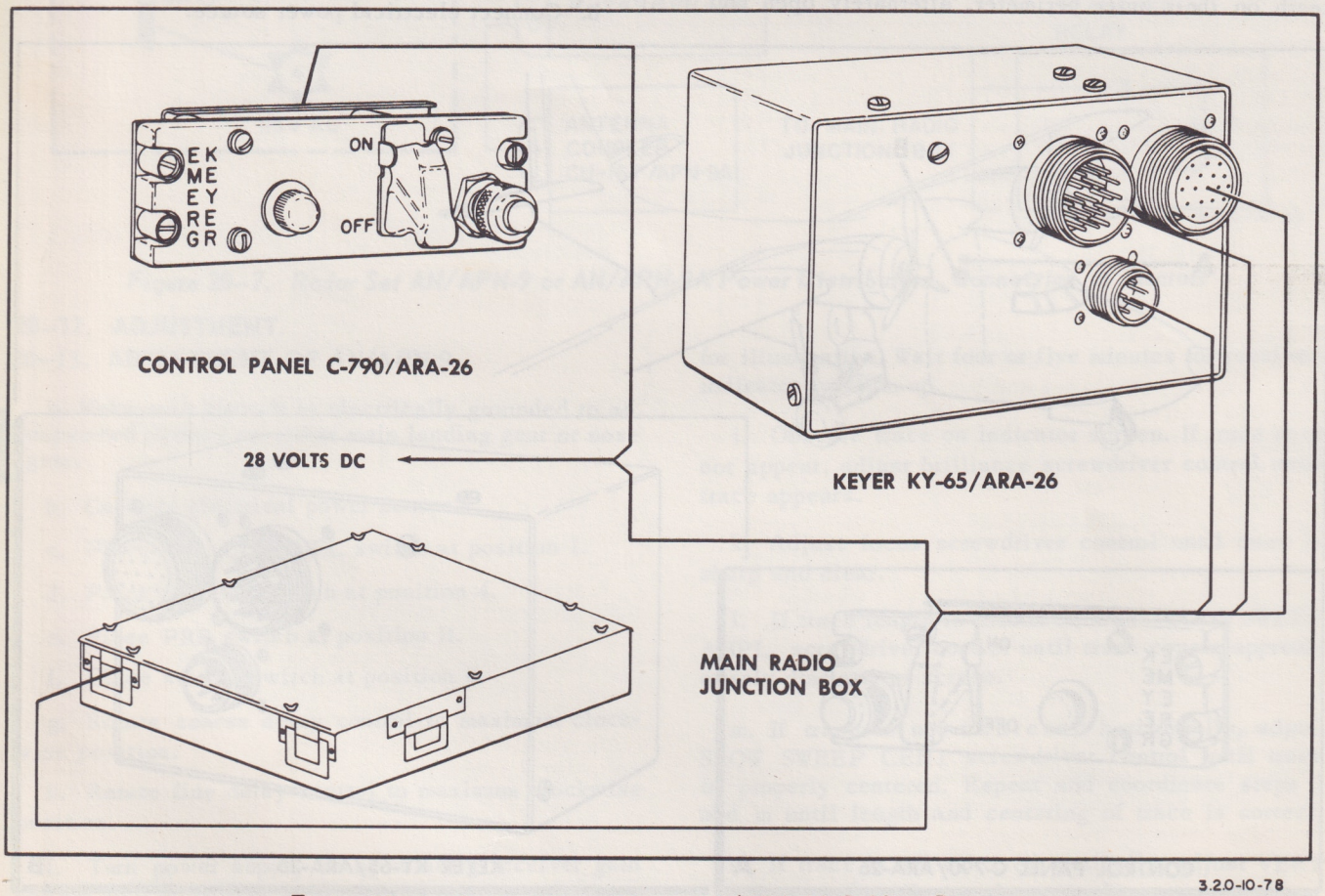

Figure 22–3. Control Keyer Group AN/ARA-26 Cabling Diagram

c. Press inward on the control panel indicator light ferrule.

RESULT: Indicator light should illuminate.

d. Press inward on the ferrule of the indicator light on the keyer control.

RESULT: Indicator light should illuminate.

e. Turn on the aircraft main panel lighting switch.

RESULT: The panel light on the control panel should illuminate.

f. Disconnect electrical power source.

22–7. SYSTEM ANALYSIS.

22–8. TROUBLESHOOTING AN/ARA-26. (See figures 22–4 and 22–5.)

SYMPTOM	FUNCTIONAL LOOP	KEY TEST POINTS
Group completely inoperative.	D-C power.	1
Indicator lights do not operate.	D-C power.	

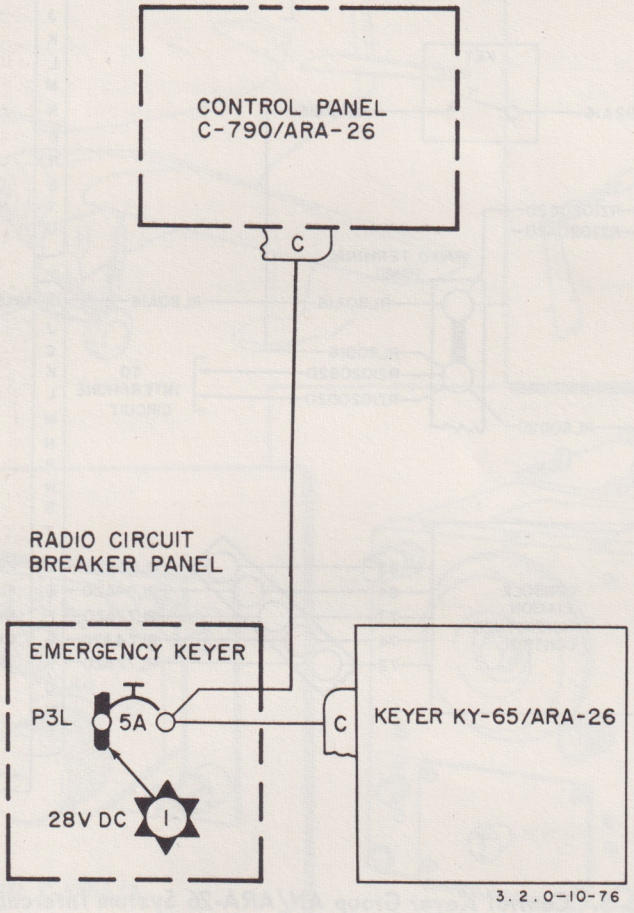

Figure 22–4. Control Keyer Group AN/ARA-26 Power Distribution, Connection to Aircraft

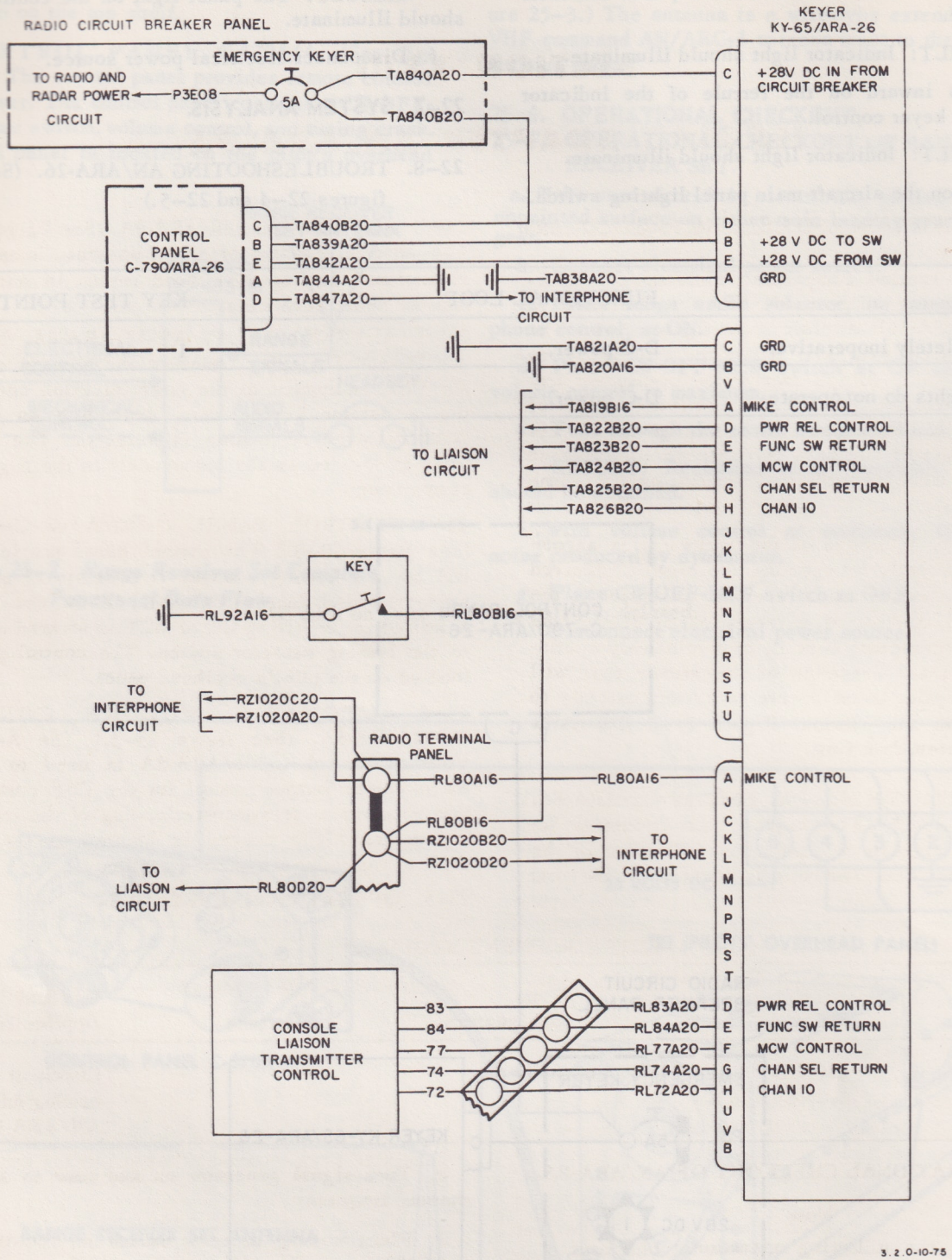

Figure 22–5. Control Keyer Group AN/ARA-26 System Intercabling

SECTION XXIII

HOMING ADAPTER AN/ARA-8A

23–1. DESCRIPTION AND LEADING PARTICULARS.

23–2. This section comprises maintenance instructions for homing adapter AN/ARA-8A, installed in SA-16A and SA-16B aircraft. (See figure 23–1.) The adapter is used with VHF Command AN/ARC-3 to provide the pilot with a means for homing on any transmitted carrier within the frequency range of 120 to 140 MC. Principal components of the adapter are a modulator keying unit, two antennas, an antenna relay, a control panel, and an automatic volume control.

23–3. Homing by means of the equipment is accomplished by properly interpreting the signals received on the VHF communication receiver. Indication in the headset will consist of a repetition of one of the Morse code characters D or U, or a relatively continuous audio tone. Presence of the steady tone will indicate the pilot is on course or headed directly to or away from the station. Figure 23–2 illustrates complete system data flow.

23–4. MODULATOR KEYING UNIT MD-34/ARA-8A. (See figure 23–3.) The keying unit modulates incoming C-W signals so that aural indication of the signal is possible. The unit is located on the rear wing beam.

23–5. ANTENNA AS-148/ARA-8A. (See figure 23–3.) The antenna consist of a rod antenna, housed in a streamlined impregnated wood mast. An antenna is located under each wing.

23–6. ANTENNA RELAY RE-13/ARA-8A. (See figure 23–3.) The relay connects the antenna cable of the VHF equipment to the communication antenna or the modulator keying unit, depending on whether communication or homing is selected. The antenna relay is located on the lower shelf in the flight deck compartment.

23–7. CONTROL PANEL C-402/A or C-402A/A. (See figure 23–3.) The control panel provides control for the homing adapter. It consists of a homing selector switch labeled HOMING, COMM, and TRANS. A switch for selecting CW or MCW is located adjacent to the homing selector switch. The control panel is located on the pilot's overhead panel.

23–8. AUTOMATIC VOLUME CONTROL C-301/ARA-8A. (See figure 23–3.) The Automatic Volume Control C-301/ARA-8A is used to provide an automatic output control for the VHF communication receiver to prevent overloading of the modulator keying unit. The control is located on the bottom shelf at the radar-navigator's station.

23–9. OPERATIONAL CHECKOUT.

TEST EQUIPMENT REQUIRED

Figure and Index NO.	Name	Type Designation	Alternate	Use and Application
(None)	SIGNAL GENERATOR	I-130-A		Checkout of homing adapter AN/ARA-8A.

23–10. OPERATIONAL CHECKOUT OF AN/ARA-8A.

Note

Perform the following operational checkout on level ground and under no circumstances nearer than 150 feet to the nearest metallic object.

a. Make sure aircraft is electrically grounded to an unpainted surface on either main landing gear or nose gear.

b. Connect electrical power source.

c. Make sure VHF command equipment is operating.

d. Place homing selector switch on control panel at COMM.

e. Turn signal generator on and tune to selected channel frequency.

f. Place homing selector switch on control panel at HOMING and CW-MCW switch at MCW.

g. Using a 22-inch length of 3/16-inch diameter metal rod as an antenna, place signal generator on right-hand side of aircraft and at least 50 feet away.

RESULT: Code character U should be heard in headset.

h. Place CW-MCW switch at CW.

RESULT: A complex tone of 1000 cycles from

A

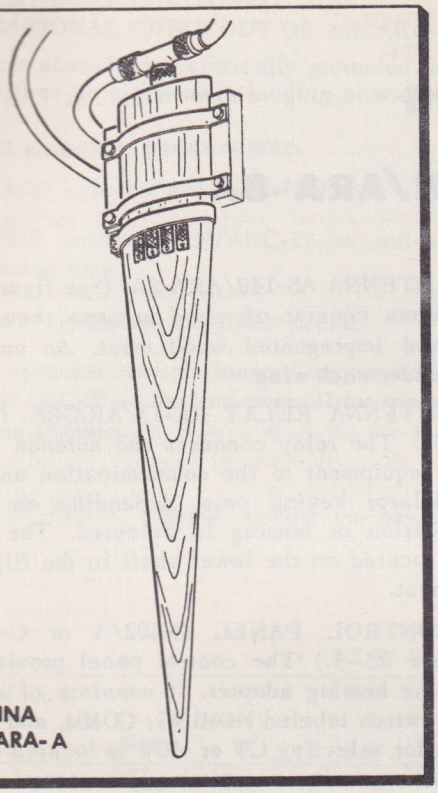

ANTENNA
AS-148/ARA-A

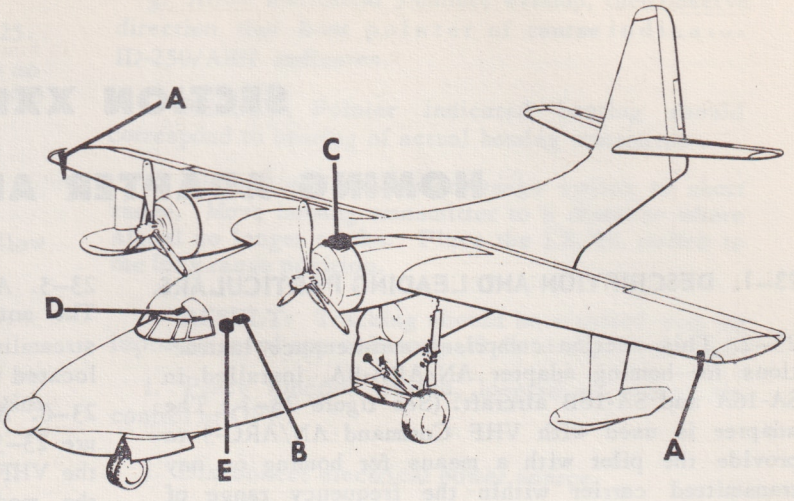

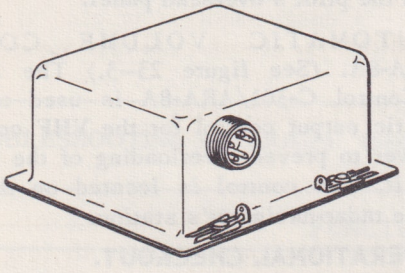

AUTOMATIC VOLUME CONTROL UNIT
C-301/ARA-8A
B

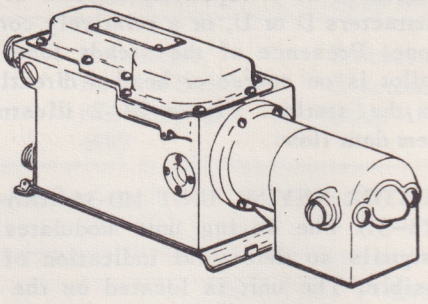

MODULATOR KEYING UNIT
MD-34/ARA-A
C

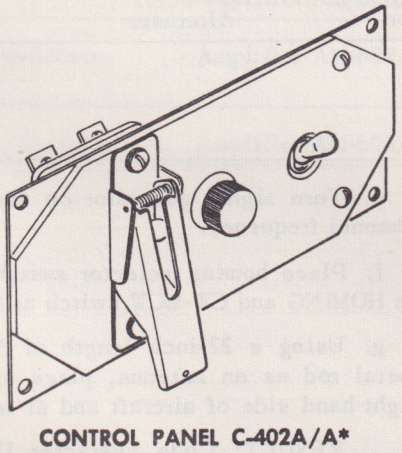

CONTROL PANEL C-402A/A*
D

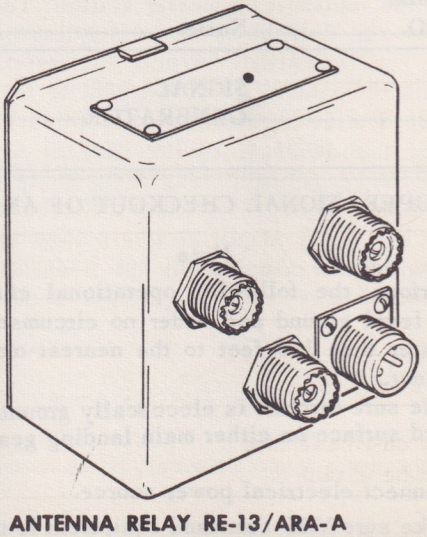

ANTENNA RELAY RE-13/ARA-A
E

NOTE
*CONTROL PANEL C-402/A REPLACES C-402A/A IN SOME AIRCRAFT.

3.2.0-10-60

Figure 23-1. Homing Adapter AN/ARA-8A Component Locations

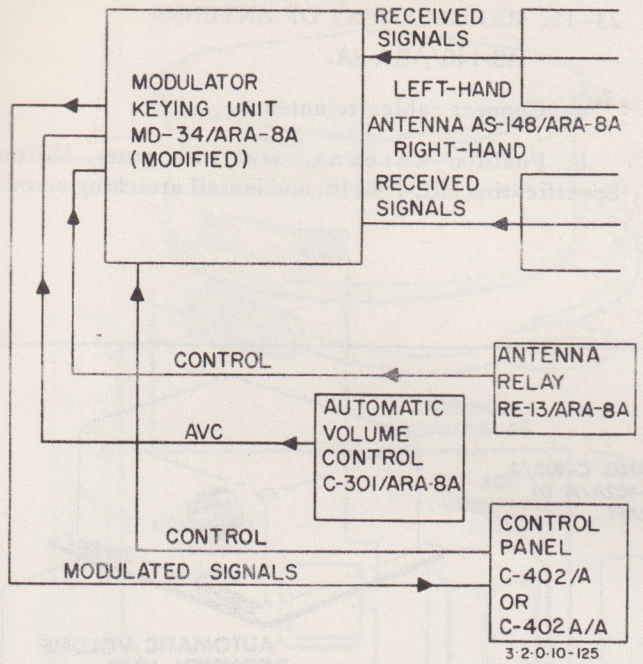

Figure 23–2. Homing Adapter AN/ARA-8A Complete Functional Data Flow

signal generator and 800 cycles from modulator should be heard in headset.

i. Move signal generator to the left-hand side of aircraft.

RESULT: Code character D should be heard in headset.

j. Place homing selector switch at TRANS.

RESULT: VHF command transmitter should operate.

k. Move signal generator to a location directly off tail of the aircraft.

RESULT: A steady tone should be heard in headset.

l. Move signal generator toward left-hand side of aircraft until character D is heard. Then move signal generator back toward position directly behind tail and note location of signal generator when on-course indication is first heard. Repeat this procedure, moving signal generation toward right-hand side of aircraft until character U is heard. Then move signal generator back toward position directly behind tail and note location of signal generator when on-course indication is first heard.

RESULT: Two positions of signal generator where on-course is distinguishable on left-hand and right-hand side of tail should be symmetrically located with respect to center line of the aircraft projected to rear.

m. Disconnect electrical power source.

23–11. SYSTEM ANALYSIS.

TEST EQUIPMENT REQUIRED

Figure and Index NO.	Name	Type Designation	Alternate	Use and Application
(None)	MULTIMETER	AN/PSM-6	Multimeter, Federal Stock NO. 6625-649-4593	Troubleshooting homing adapter AN/ARA-8A.

23–12. TROUBLESHOOTING AN/ARA-8A. (See figures 23–4 and 23–5.)

SYMPTOM	FUNCTIONAL LOOP	KEY TEST POINTS
Homing adapter completely inoperative.	Power.	1, 2, 3, and 4
One code character not heard at any time.	Modulator keying unit. Antenna relay.	
Steady on-course tone cannot be obtained.	CW-MCW switch.	

23–13. REMOVAL AND REPLACEMENT.

23–14. REMOVAL OF ANTENNA AS-148/ARA-8A.

a. Remove screws attaching antenna.

b. Lower antenna and disconnect cables.

c. Remove antenna.

23–15. REPLACEMENT OF ANTENNA AS-148/ARA-8A.

a. Connect cables to antenna.

b. Position antenna, seal with putty, Military Specification MIL-P-8116, and install attaching screws.

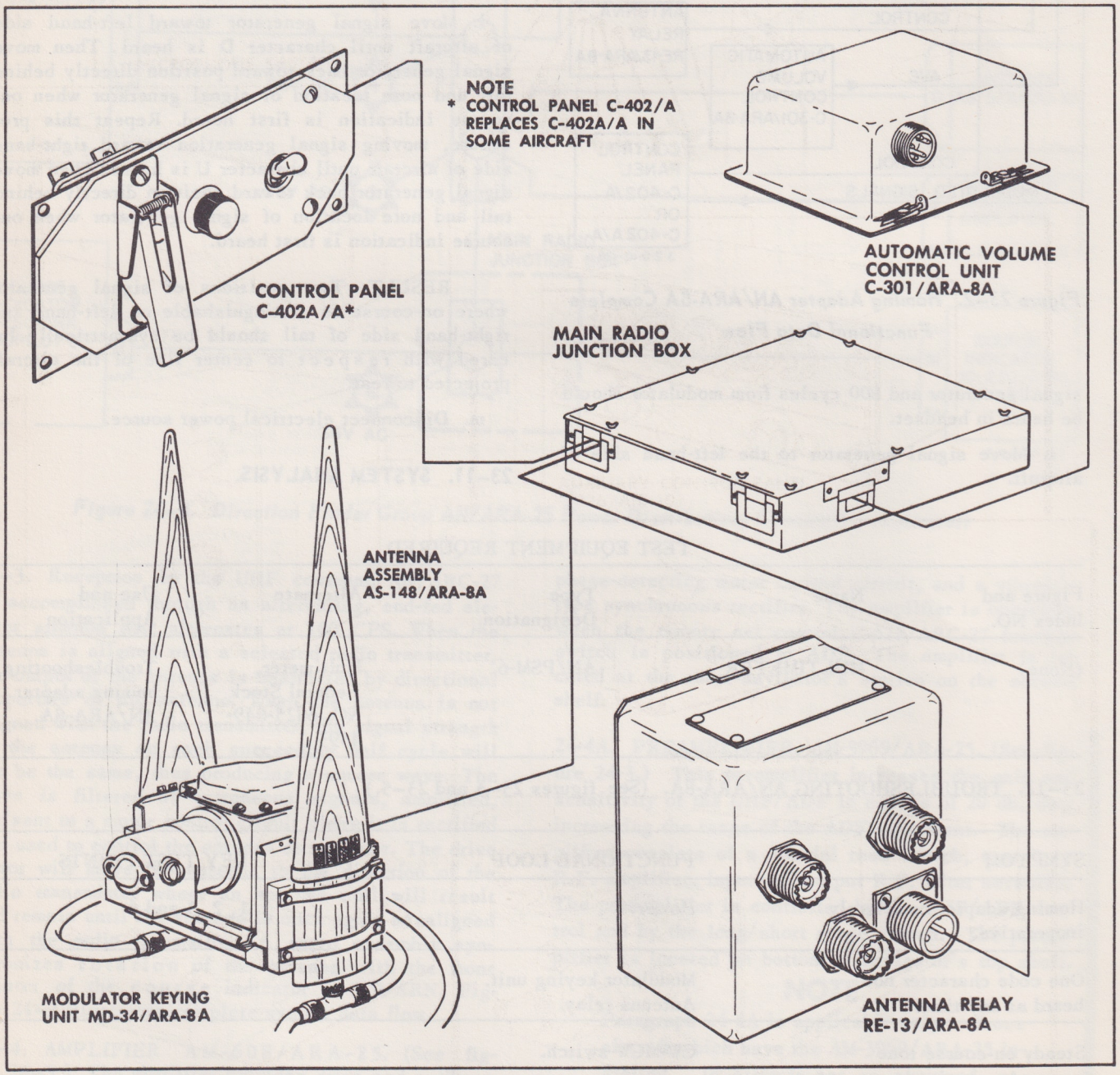

Figure 23–3. Homing Adapter AN/ARA-8A Cabling Diagram

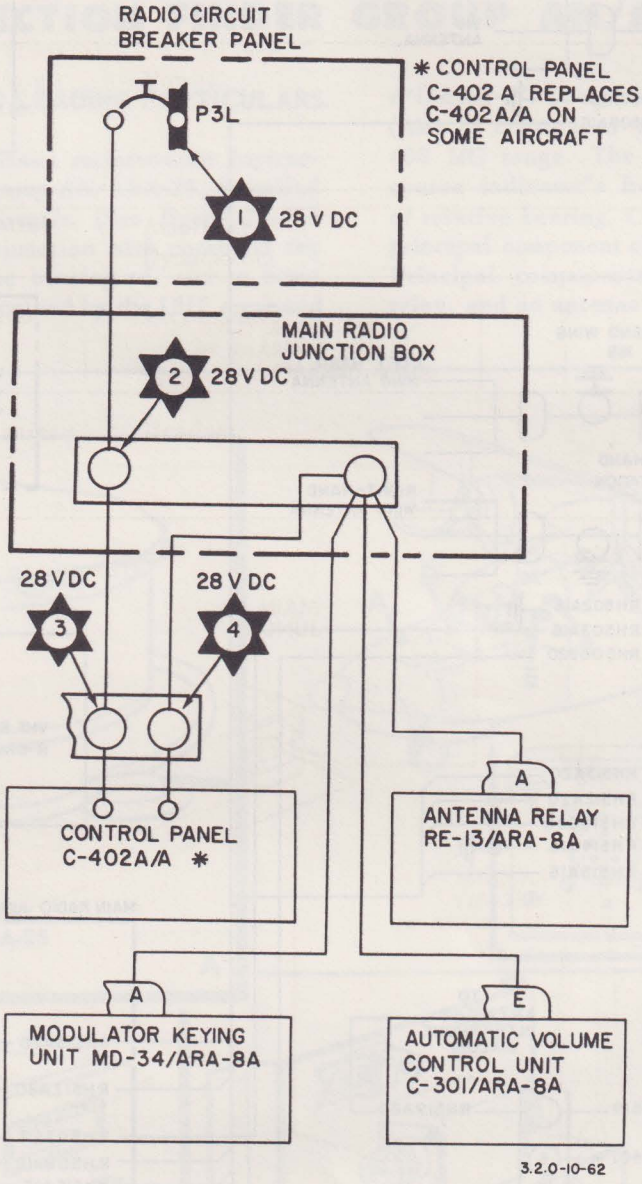

Figure 23–4. Homing Adapter AN/ARA-8A Power Distribution, Connection to Aircraft

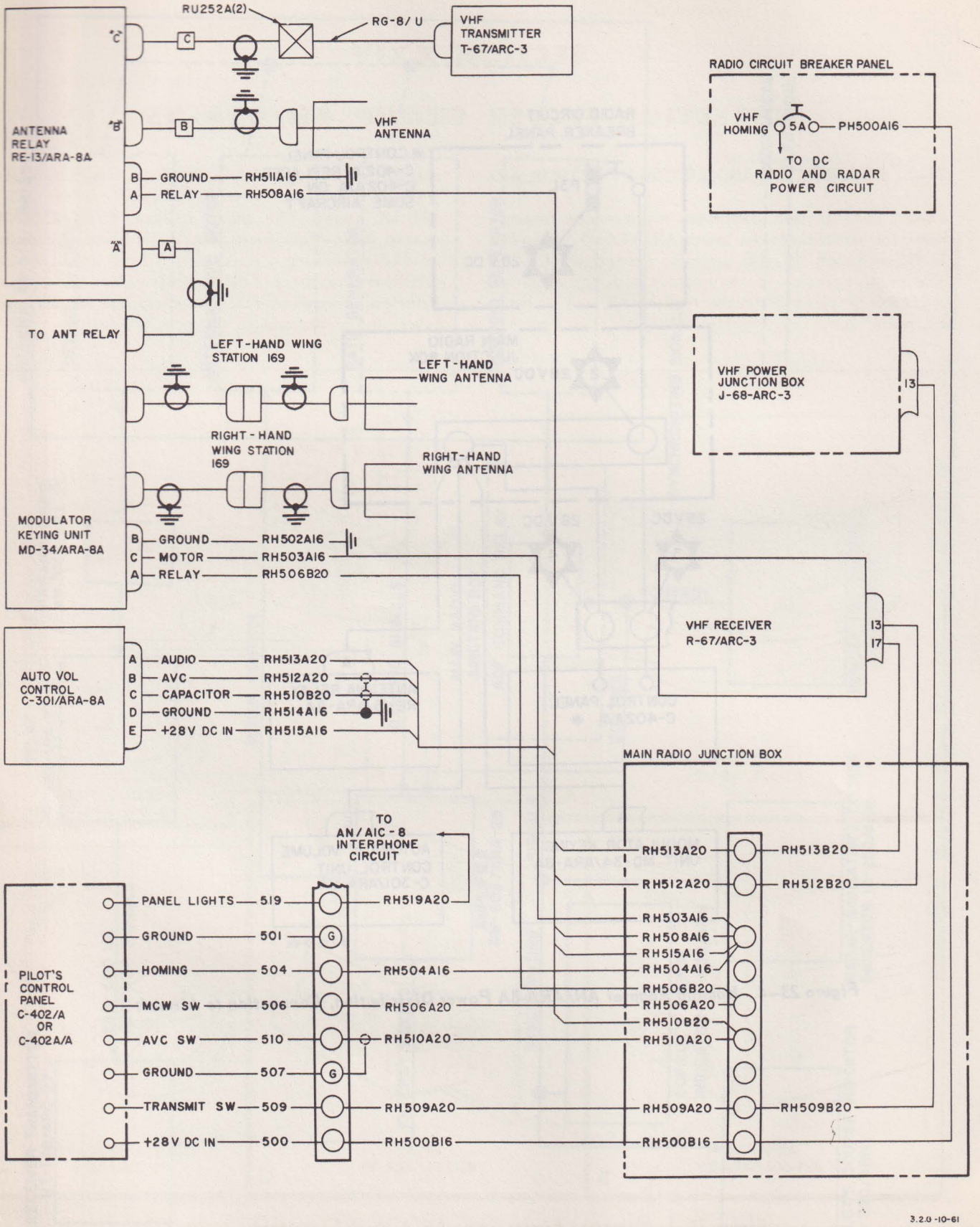

Figure 23–5. Homing Adapter AN/ARA-8A System Intercabling

SECTION XXIV

DIRECTION FINDER GROUP AN/ARA-25

24–1. DESCRIPTION AND LEADING PARTICULARS.

24–2. This section comprises maintenance instructions for direction finder group AN/ARA-25, installed in HU-16A and HU-16B aircraft. (See figure 24–1.) The group operates in conjunction with command set AN/ARC-27 to indicate the bearing of, and to home on, radio signal sources received by the UHF command AN/ARC-27. The group will detect amplitude modulated (AM) or continuous wave (CW) signals in the 225 to 400 MC range. The group utilizes the ID-250/ARN course indicator's front pointer for visual indication of relative bearing. Course indicator ID-250/ARN is a principal component of radio receiving set AN/ARN-14. Principal components of the group are an amplifier, relay, and an antenna.

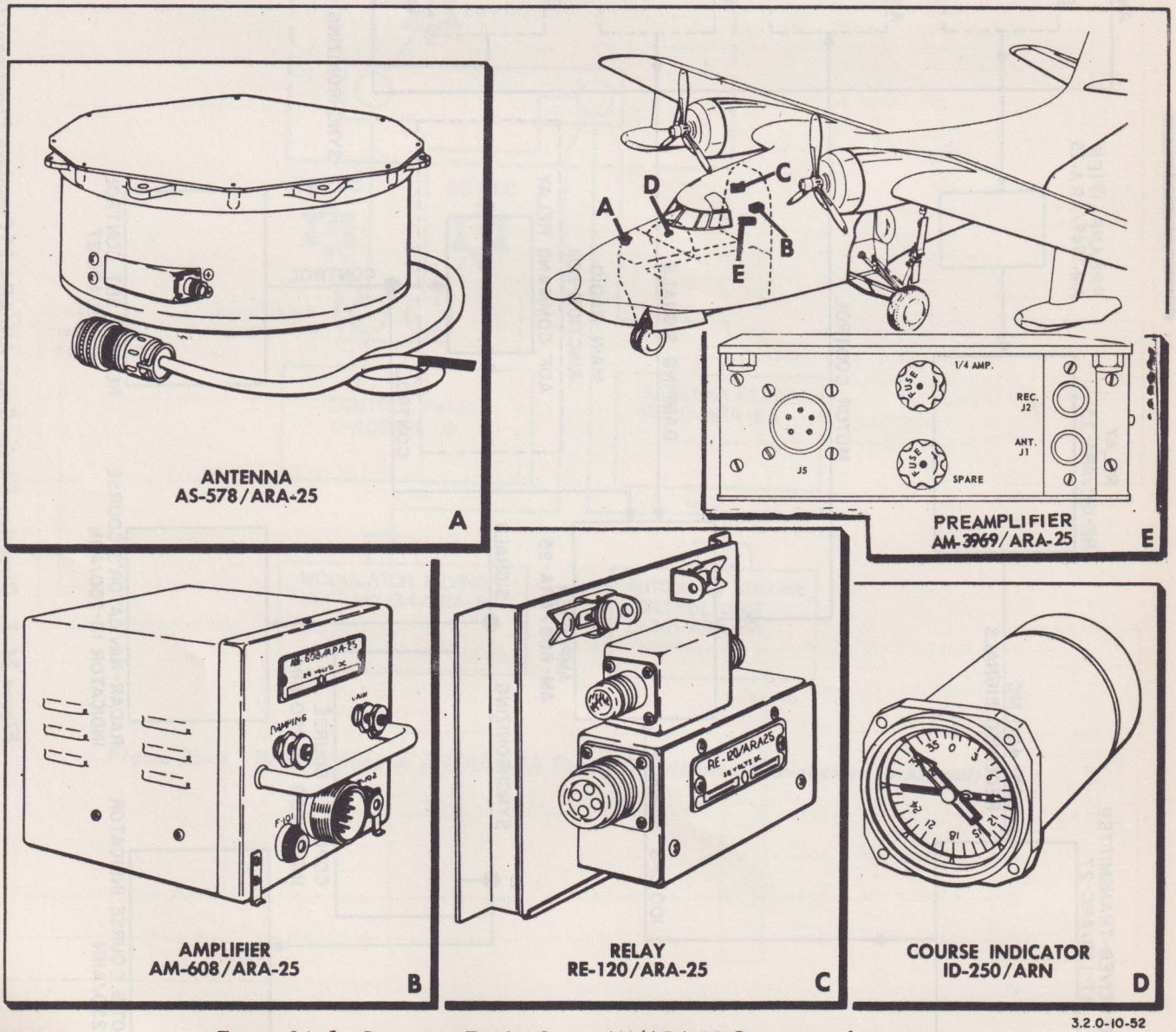

3.2.0-10-52

Figure 24–1. Direction Finder Group AN/ARA-25 Component Locations

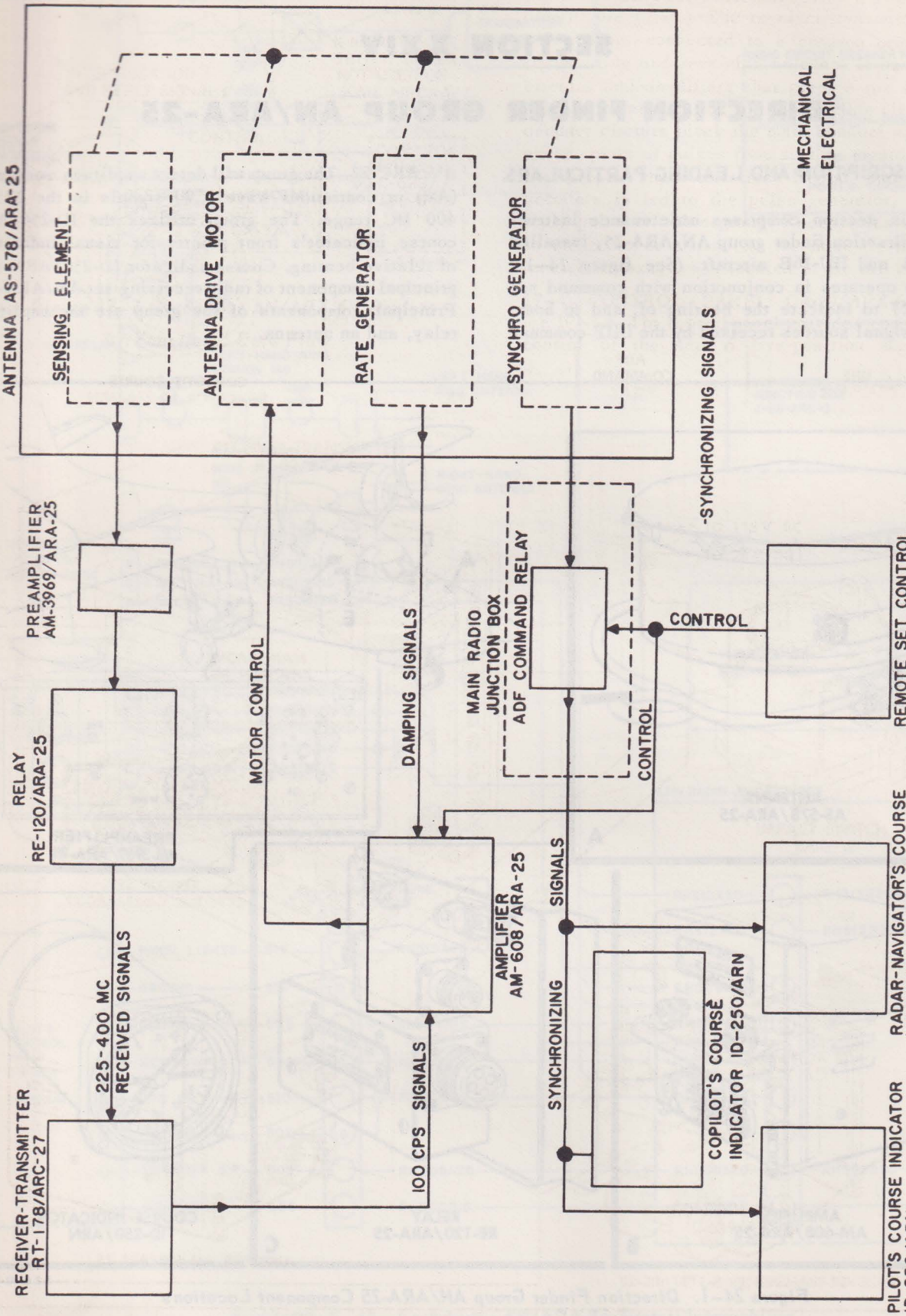

Figure 24-2. Direction Finder Group AN/ARA-25 Complete Functional Data Flow

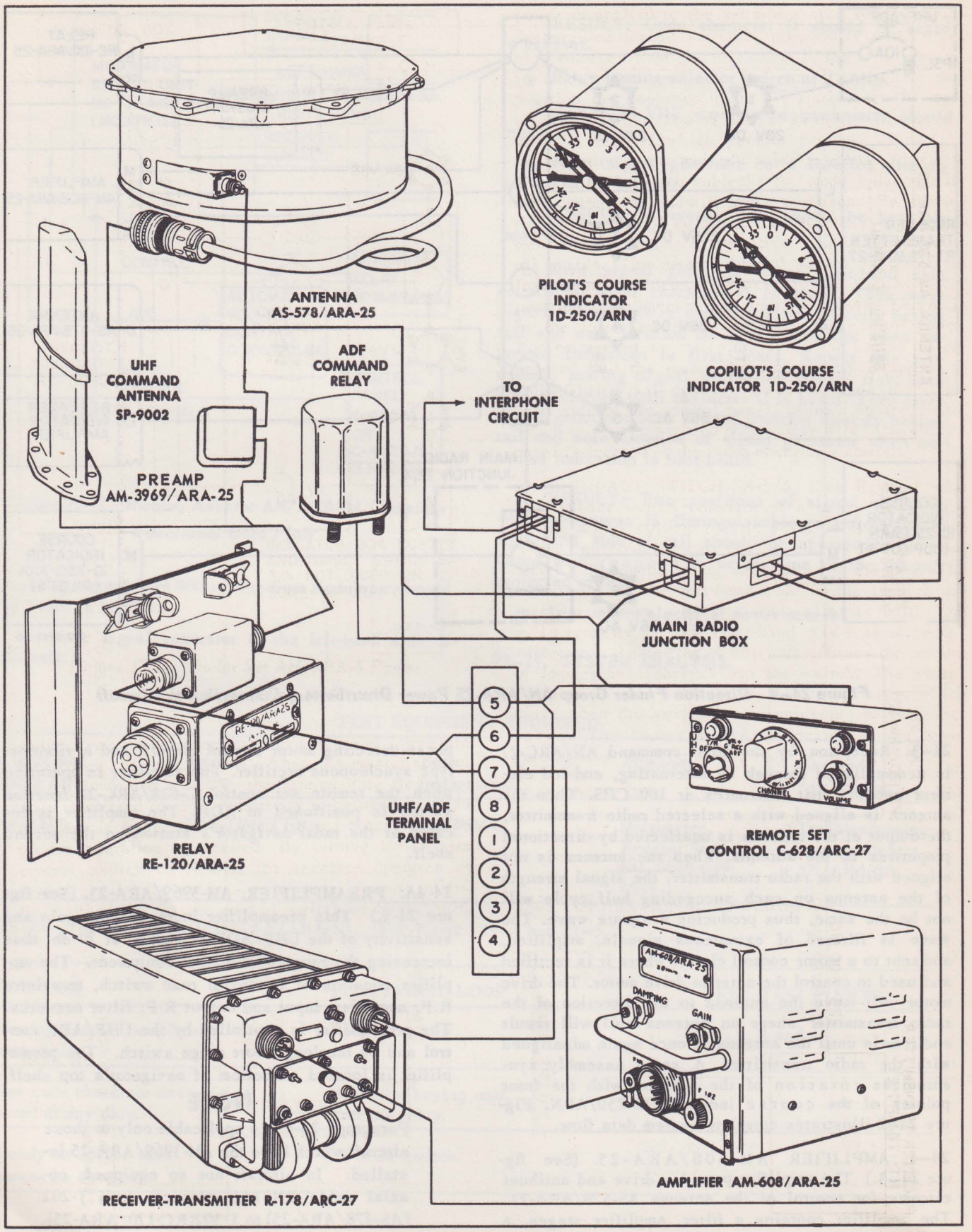

Figure 24–3. Direction Finder Group AN/ARA-25 Cabling Diagram

3.2.0-10-53

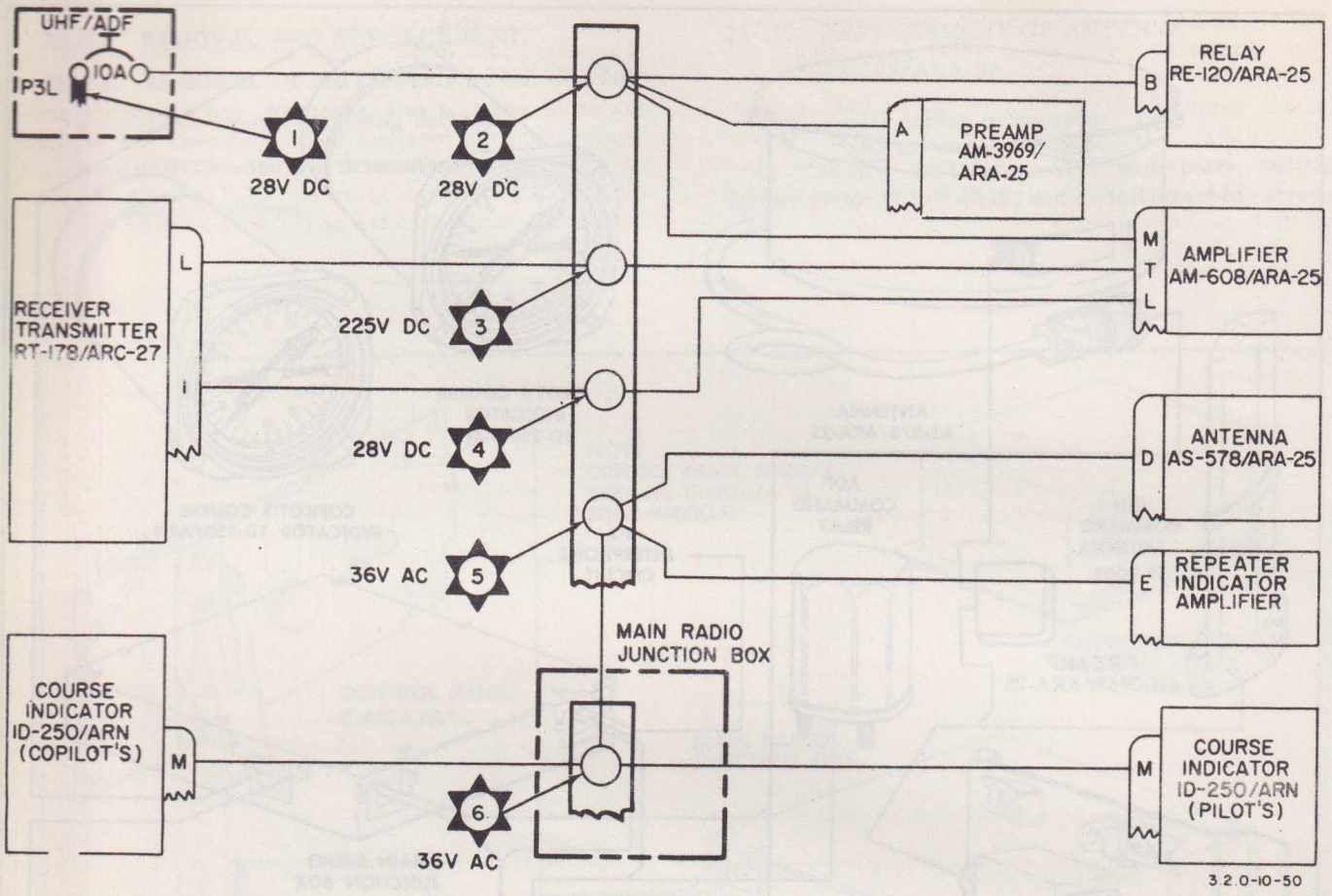

Figure 24–4. Direction Finder Group AN/ARA-25 Power Distribution, Connection to Aircraft

24–3. Reception by the UHF command AN/ARC-27 is accomplished through an alternating, end-fed element antenna that alternates at 100 CPS. When the antenna is aligned with a selected radio transmitter, the output of the antenna is unaffected by directional properties of the antenna. When the antenna is not aligned with the radio transmitter, the signal strength of the antenna on each succeeding half cycle will not be the same, thus producing a square wave. The wave is filtered of extraneous signals, amplified, and sent to a motor control circuit where it is rectified and used to control the antenna drive motor. The drive motor will move the antenna to the direction of the radio transmitter where an antenna null will result and remain until the antenna is once again misaligned with the radio transmitter. A servo assembly synchronizes rotation of the antenna with the front pointer of the course indicator ID-250/ARN. Figure 24–2 illustrates complete system data flow.

24–4. AMPLIFIER AM-608/ARA-25. (See figure 24–3.) The amplifier provides drive and antihunt circuits for control of the antenna AS-578/ARA-25. The amplifier contains a filter, amplifier stages, a phase-detecting motor control circuit, and a vibrator-type synchronous rectifier. The amplifier is operative when the remote set control C-628/ARC-27 function switch is positioned to ADF. The amplifier is located at the radar-navigator's station on the second shelf.

24-4A. PREAMPLIFIER, AM-3969/ARA-25. (See figure 24-3.) This preamplifier increases the gain and sensitivity of the UHF/ADF in excess of 20 db, thus increasing the range of the ADF equipment. The amplifier consists of a coaxial read switch, transistor R.F. amplifier, input and output R.F. filter networks. The preamplifier is controlled by the UHF/ADF control and by the long/short range switch. The preamplifier is located on bottom of navigator's top shelf.

NOTE

Paragraph 24-4A is applicable only to those aircraft which have the AM-3969/ARA-25 installed. In aircraft not so equipped, coaxial cable RN314A connects from J-202 (AS-478/ARA-25) to J-302(RC-120/ARA-25).

24–5. RELAY RE-120/ARA-25. (See figure 24–3.) The direction finder group relay is a single-pole, double-throw coaxial relay that connects the directional antenna AS-578/ARA-25 to the UHF command AN/ARC-27 when the remote set control function switch located on the pilots' overhead panel is at ADF. The relay is located at the radar-navigator's station on the top shelf.

24–6. ANTENNA AS-578/ARA-25. (See figure 24–3.) The direction finder group antenna consists of a rhombic-shaped element directional antenna, an antenna drive motor, a rate generator, and a synchro generator. Signals received by the antenna are applied to the receiver-transmitter of the UHF command AN/ARC-27 through a relay RE-120/ARA-25. The antenna is located on top of the nose section.

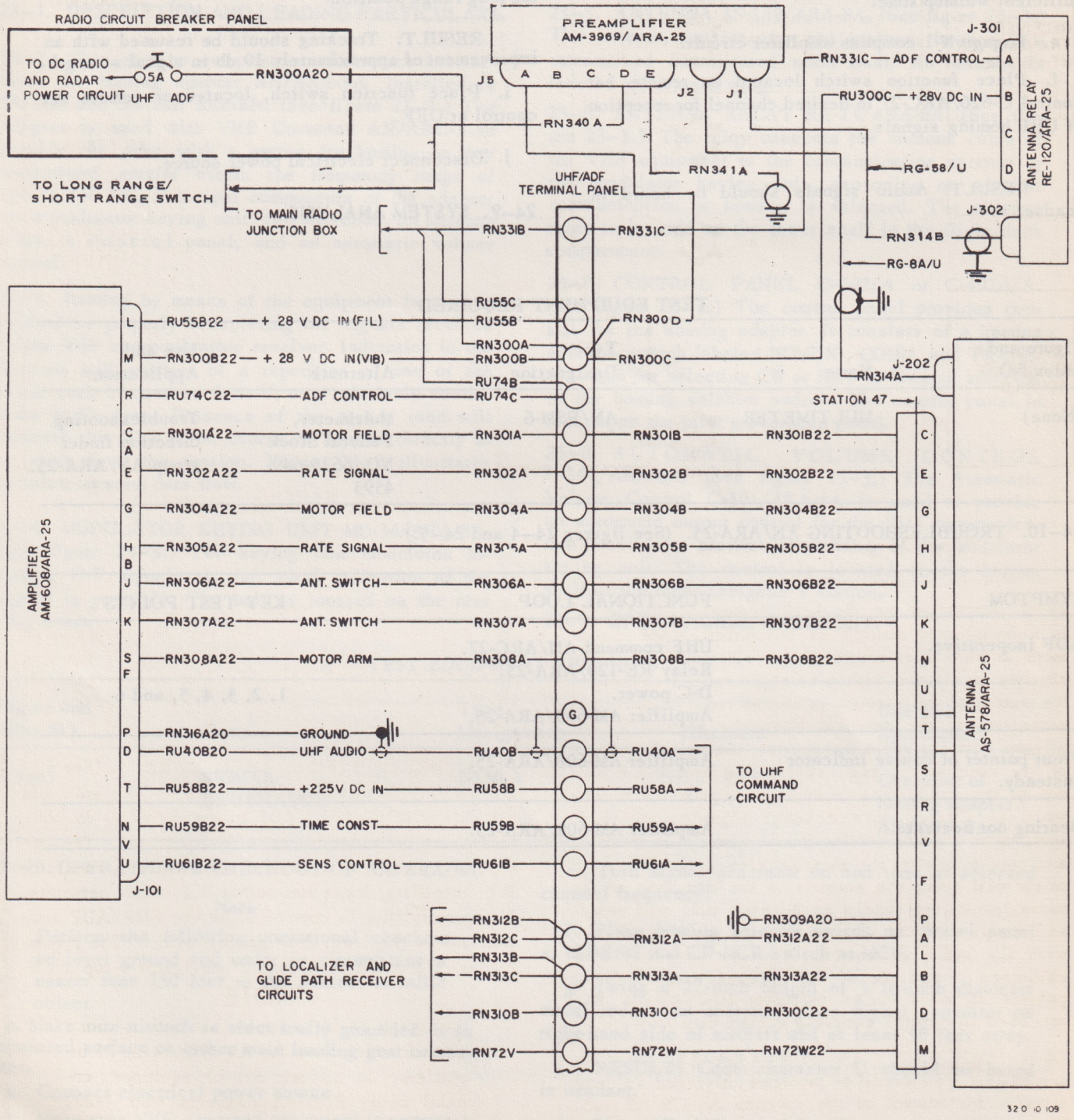

Figure 24–5. Direction Finder Group AN/ARA-25 System Intercabling

24–7. OPERATIONAL CHECKOUT.

24–8. OPERATIONAL CHECKOUT OF AN/ARA-25.

a. Make sure aircraft is electrically grounded to an unpainted surface on either main landing gear or nose gear.

b. Connect electrical power source.

c. Place ADF selector switch at UHF ADF.

d. Turn UHF command AN/ARC-27 on and allow sufficient warmup time.

e. Engage N-1 compass amplifier circuit.

f. Place function switch located on remote set control C-626/ARC-27 to desired channel for reception of UHF homing signals.

RESULT: Audio signals should be heard in headset.

g. Allow additional 3-minute warmup, then observe direction that front pointer of course indicator ID-250/ARN indicates.

RESULT: Pointer indicated bearing should correspond to bearing of actual homing transmitter.

h. Place long range/short range switch to short range. Move homing transmitter to a distance where signal no longer tracks. Place the LR/SR switch to the long range position.

RESULT: Tracking should be resumed with an improvement of approximately 10 db in signal strength.

i. Place function switch, located on remote set control at OFF.

j. Disconnect electrical power source.

24–9. SYSTEM ANALYSIS.

TEST EQUIPMENT REQUIRED

Figure and Index NO.	Name	Type Designation	Alternate	Use and Application
(None)	MULTIMETER	AN/PSM-6	Multimeter, Federal Stock NO. 6625-649-4593	Troubleshooting direction finder group AN/ARA-25.

24–10. TROUBLESHOOTING AN/ARA-25. (See figures 24–4 and 24–5.)

SYMPTOM	FUNCTIONAL LOOP	KEY TEST POINTS
ADF inoperative.	UHF command AN/ARC-27. Relay RE-120/ARA-25. D-C power. Amplifier AM-608/ARA-25.	1, 2, 3, 4, 5, and 6
Front pointer of course indicator unsteady.	Amplifier AM-608/ARA-25.	
Bearing not accurate.	Amplifier AM-608/ARA-25.	

SECTION XXV

RANGE RECEIVER SET

25–1. DESCRIPTION AND LEADING PARTICULARS.

25–2. This section comprises maintenance instructions for range receiver set, installed in SA-16A and SA-16B aircraft. (See figure 25–1.) The range receiver is designed to receive voice, CW, and MCW signals in the 190 to 550 KC frequency band. Principal components of the set are a receiver, control panel, and an antenna. Figure 25–2 illustrates complete system data flow.

25–3. RECEIVER BC-453-B. (See figure 25–3.) The receiver contains a high voltage dynamotor, and necessary circuits for reception of voice, CW, and MCW

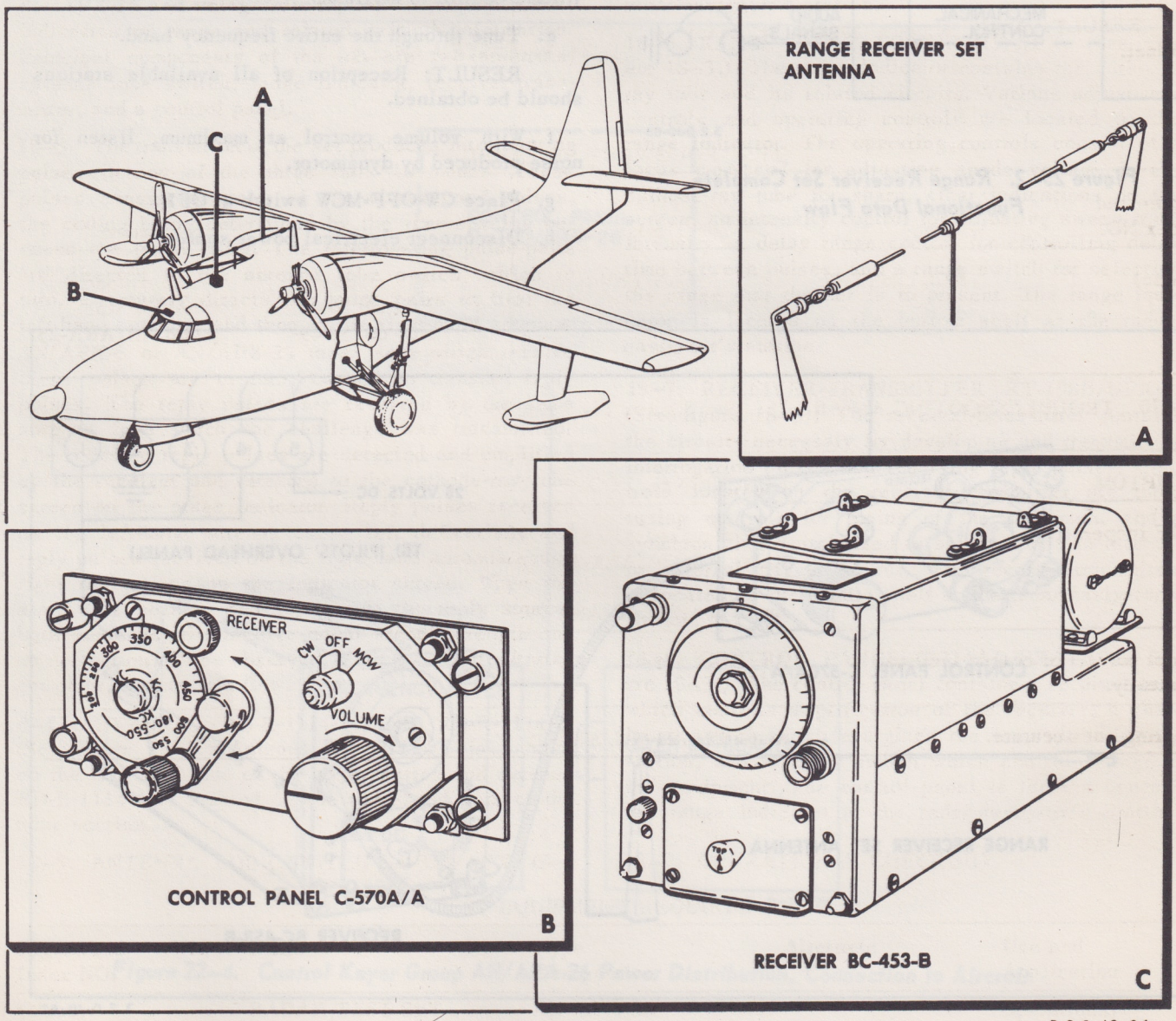

Figure 25–1. Range Receiver Set Component Locations

signals. The receiver is located at the radar-navigator's station on the top shelf.

25–4. CONTROL PANEL C-570A/A. (See figure 25–3.) The control panel provides remote control of the receiver. The control panel contains a CW-OFF-MCW selector switch, volume control, and tuning crank. The control panel is located on the pilot's overhead panel.

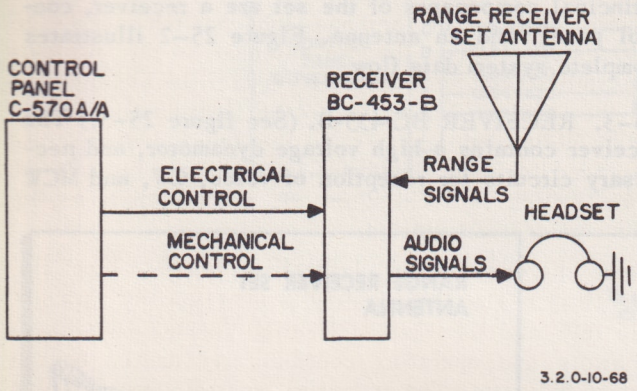

Figure 25–2. Range Receiver Set Complete Functional Data Flow

25–5. RANGE RECEIVER SET ANTENNA. (See figure 25–3.) The antenna is a wire-type extending from VHF command AN/ARC-3 antenna mast to the forward antenna mast.

25–6. OPERATIONAL CHECKOUT.

25–7. OPERATIONAL CHECKOUT OF RANGE RECEIVER SET.

a. Make sure aircraft is electrically grounded to an unpainted surface on either main landing gear or nose gear.

b. Connect electrical power source.

c. Place range audio selector, on master interphone control, at ON.

d. Place CW-OFF-MCW switch at CW and rotate volume control to maximum.

e. Tune through the entire frequency band.

RESULT: Reception of all available stations should be obtained.

f. With volume control at maximum, listen for noise produced by dynamotor.

g. Place CW-OFF-MCW switch at OFF.

h. Disconnect electrical power source.

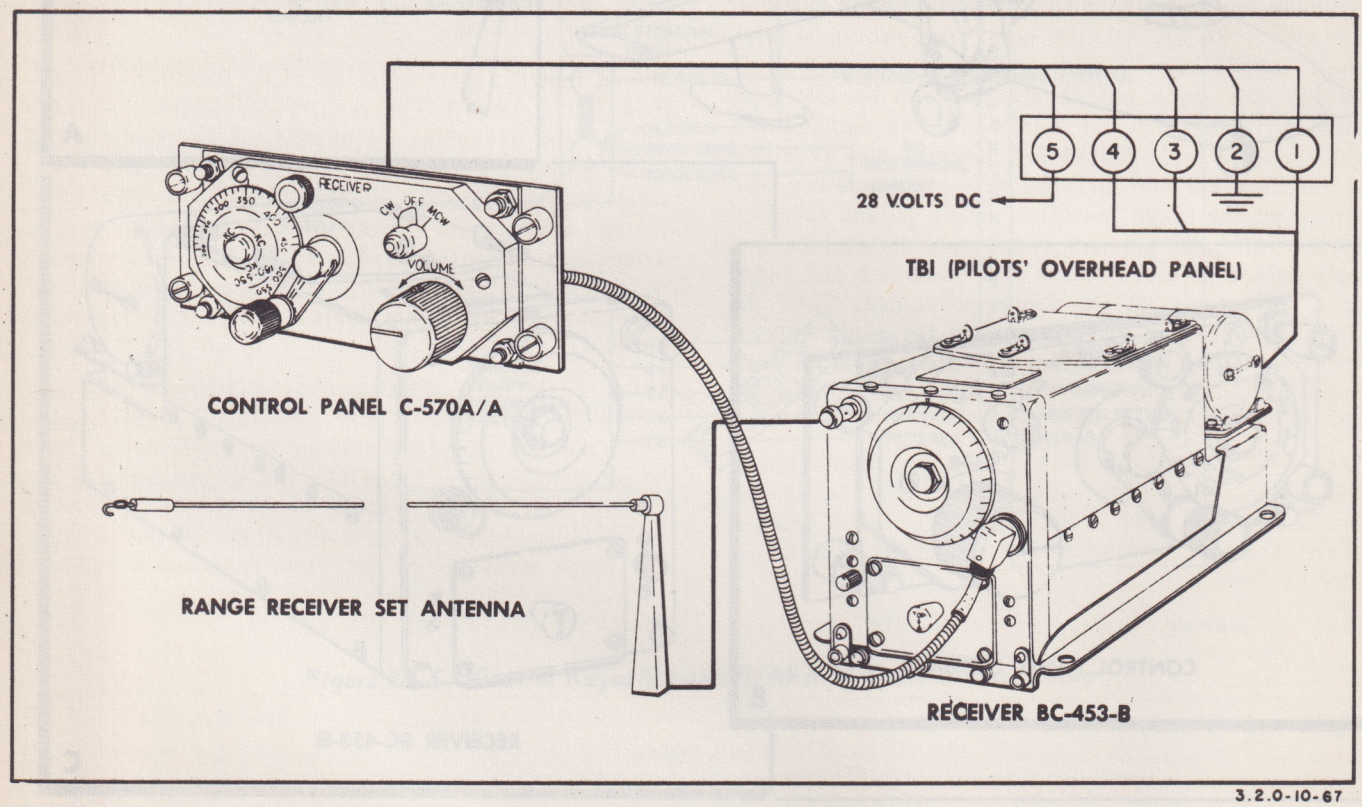

Figure 25–3. Range Receiver Set Cabling Diagram

25–8. SYSTEM ANALYSIS.

TEST EQUIPMENT REQUIRED

Figure and Index NO.	Name	Type Designation	Alternate	Use and Application.
(None)	MULTIMETER	AN/PSM-6	Multimeter, Federal Stock NO. 6625-649-4593	Troubleshooting range receiver set.

25–9. TROUBLESHOOTING RANGE RECEIVER SET. (See figures 25–4 and 25–5.)

SYMPTOM	FUNCTIONAL LOOP	KEY TEST POINTS
Range receiver completely inoperative.	D-C power. Dynamotor.	1 and 2
Electrical noise in receiver.	Dynamotor.	
Reception on one frequency and not on others.	Receiver.	

25–10. REMOVAL AND REPLACEMENT.

25–11. REMOVAL OF RANGE RECEIVER SET ANTENNA.

a. Disconnect antenna lead in wire.

b. Disconnect range receiver set antenna from VHF command AN/ARC-3 antenna mast and forward antenna mast.

c. Remove antenna.

25–12. REPLACEMENT OF RANGE RECEIVER SET ANTENNA.

a. Connect antenna lead in wire.

b. Connect antenna to forward antenna mast and to VHF command AN/ARC-3 antenna mast.

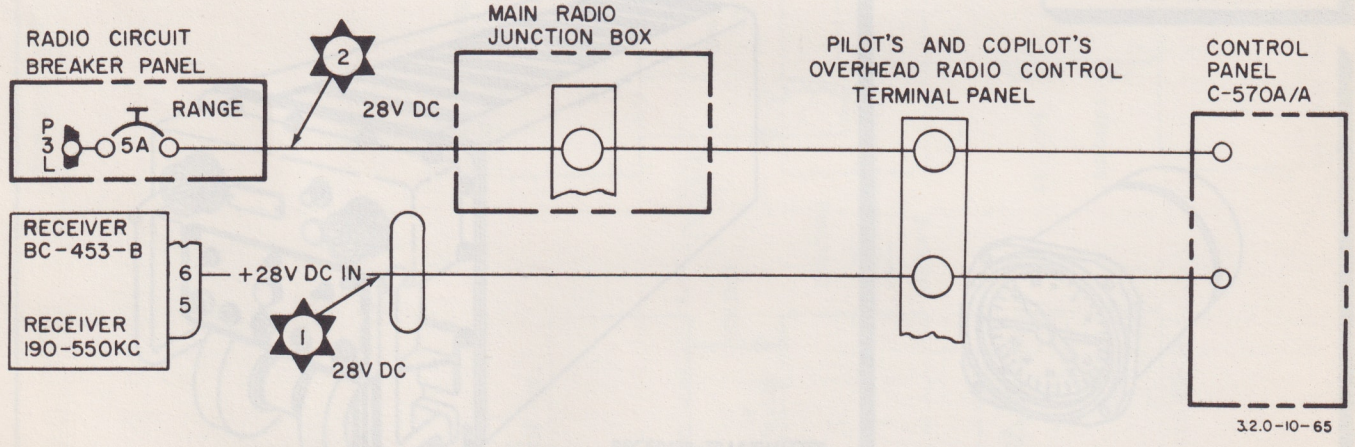

Figure 25–4. Range Receiver Set Power Distribution, Connection to Aircraft

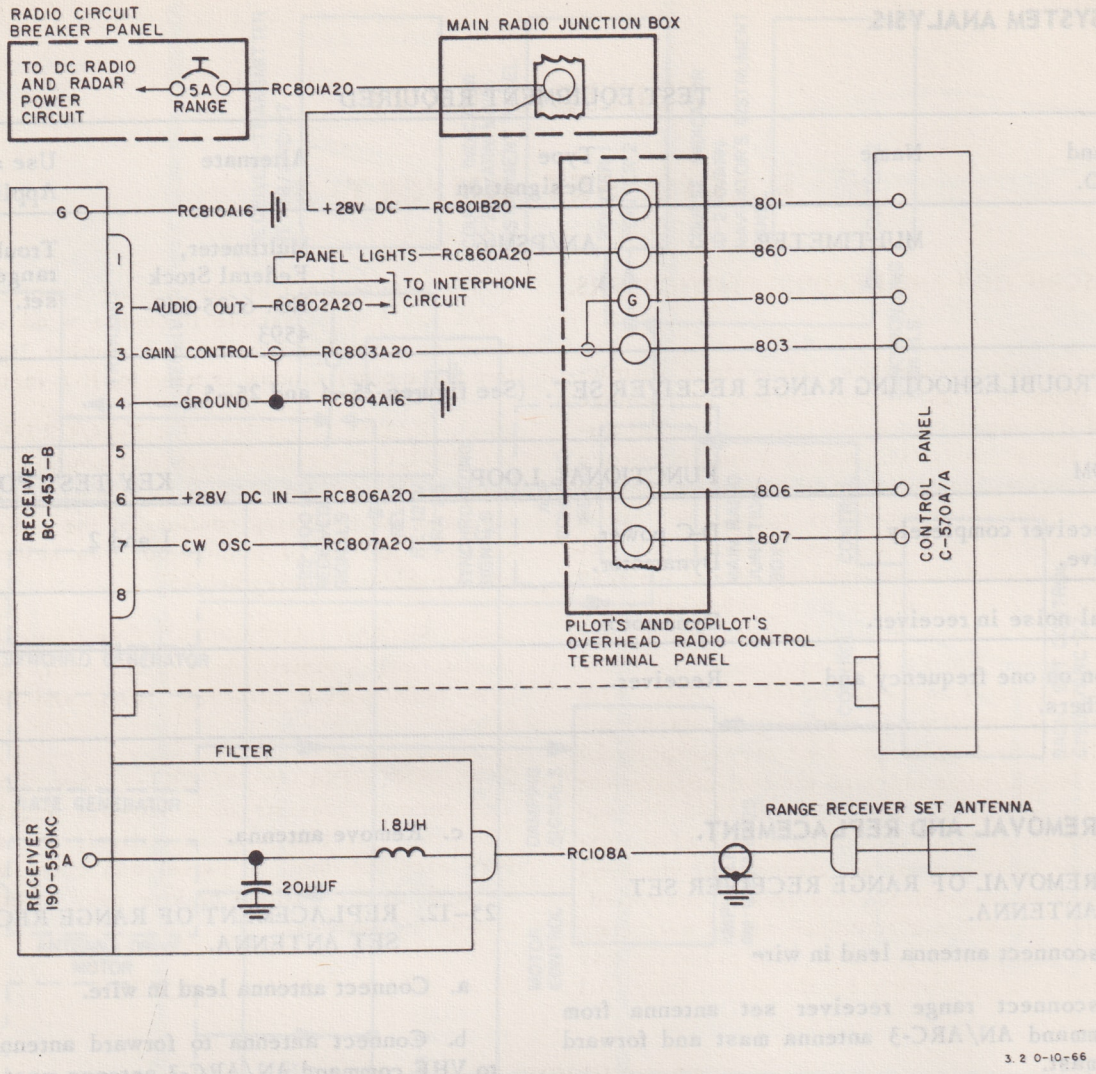

Figure 25–5. Range Receiver Set System Intercabling

SECTION XXVI

RADIO SET AN/CRT-3

26–1. DESCRIPTION AND LEADING PARTICULARS.

26–2. This section comprises maintenance instructions for radio set AN/CRT-3, stowed at fuselage station 614 right-hand side in SA-16A and SA-16B aircraft. (See figure 26–1.) The set is a dual frequency transmitting system designed for use under emergency conditions. Principal components of the set are a transmitter, signal lamp, and an antenna. The set provides fully automatic or manually keyed distress signals which permit bearings to be taken when received by rescue parties. Manually keyed signals are transmitted on the 500 KC frequency only. Automatically the set operates on the frequency of 500 KC with 1000-cycle tone modulation, transmitting six groups of SOS followed by a sustained dash approximately 20 seconds in length, after which an internal arrangement automatically shifts the frequency to 8364 KC and again six groups of SOS followed by a dash of approximately 20 seconds duration are transmitted; the 8364 KC frequency is unmodulated and crystal controlled. The long dash provides a sustained signal necessary for accurate bearings to be taken. The radio set may also be used to supply power for the signal lamp. All power requirements of the set are supplied by hand cranking. A light visible through a window provides cranking speed indication and another light visible through another window is used for R-F indication.

26–3. RADIO TRANSMITTER T-74/CRT-3. (See figure 26–1.) The radio transmitter contains the power supply, a jack for the signal lamp plug, keying assembly, and the operating controls of the radio set. The controls consist of a three-position selector switch and a pushbutton telegraph key.

26–4. SIGNAL LAMP M-308-B. (See figure 26–1.) The signal lamp consists of a plug, cord, lamp holder with lamp socket attached, lamp, and domeshaped shield.

26–5. ANTENNA AS-207/CRT-3. (See figure 26–1.) The antenna consists of a 306-foot length of wire. The length of this wire is critical, and should not vary over one foot. A swivel and clasp at one end attach to the balloon or kite used as a means of raising the antenna.

26–6. OPERATIONAL CHECKOUT.

TEST EQUIPMENT REQUIRED

Figure and Index NO.	Name	Type Designation	Alternate	Use and Application
(None)	AN/CRT-3 TEST SET	TS-522/CRT-3	A receiver capable of receiving 500 KC and 8364 KC	Operational checkout of radio set AN/CRT-3.

Note

In cases where the specialized test equipment TS-522/CRT-3 is used, the instructions supplied with the test set should be followed.

26–7. OPERATIONAL CHECKOUT OF AN/CRT-3.

Note

It is a violation of international law to transmit on 500 and 8364 KC except in an emergency. For testing purposes, this equipment should be operated into the antenna lead in wire only, and not the antenna.

a. Open antenna-reel compartment door on front of radio transmitter and lock it in open position by inserting cotter pin in hole provided.

b. Unwind lead-in wire.

RESULT: Antenna reel and brake should operate smoothly.

c. Remove crank shaft cap and insert hand crank.

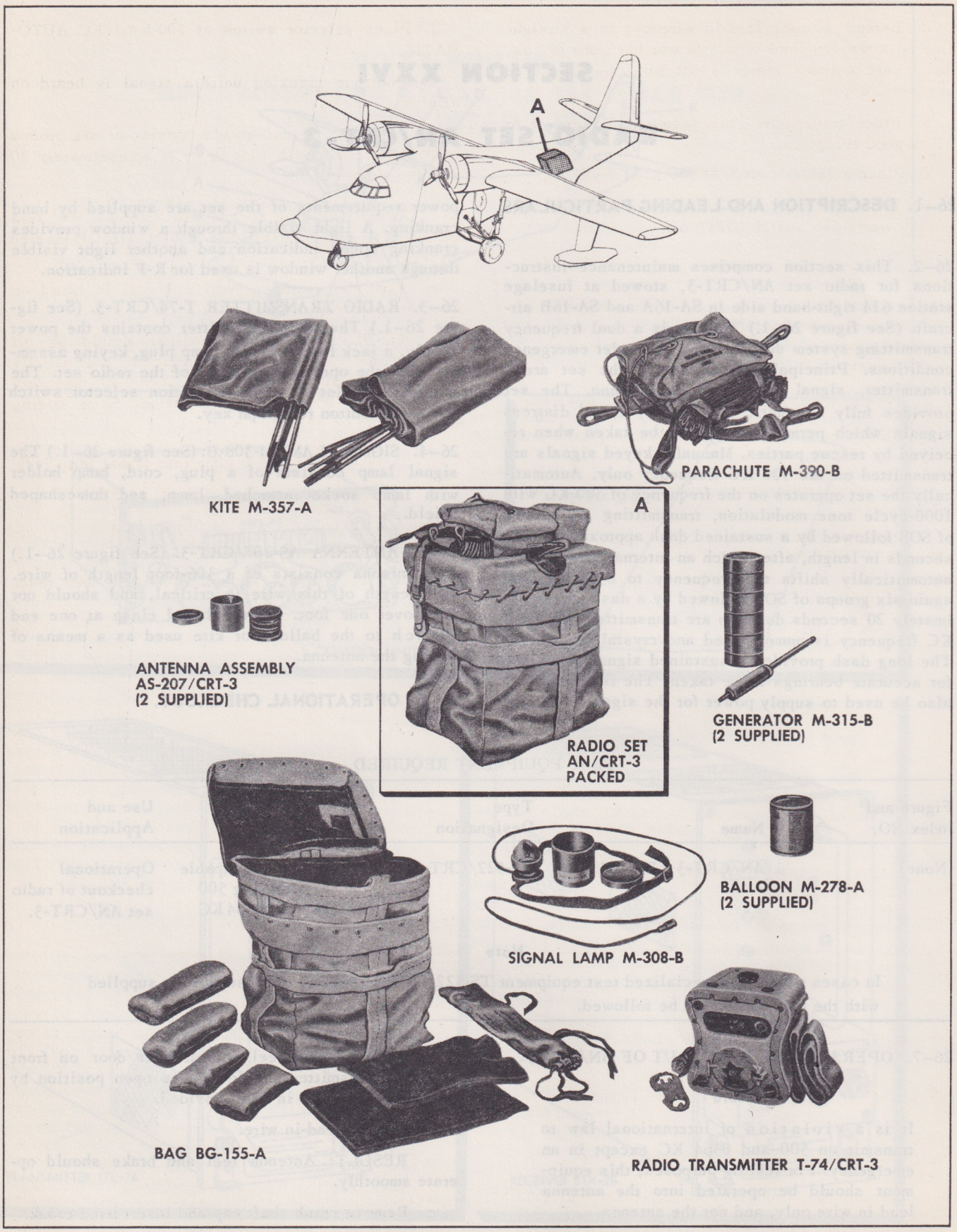

Figure 26–1. Radio Set AN/CRT-3 Components

d. Extend antenna lead-in wire out in a straight line on a wooden floor or over a wooden chair or box. Make sure antenna clasp is not touching ground or any metal object.

e. Place transmitter close enough to receiver to allow good reception.

f. Place selector switch at 500 K.C. MANUAL.

g. Tune receiver to 1000 KC and turn beat frequency oscillator switch (BFO) off.

Note

The receiver is tuned to 1000 KC, because the radio transmitter, without an antenna load, emits a stronger second harmonic than a fundamental.

h. Turn crank at a speed of about 80 to 100 RPM.

RESULT: The speed indicator lights should be on.

i. Continue turning crank and depress pushbutton telegraph key.

RESULT: Radio output light should illuminate although it will be very dim due to absence of an antenna load. A tone modulated signal should be received by monitoring receiver.

j. Place selector switch at 500-8364 KC AUTOMATIC.

k. Continue cranking until a signal is heard on monitoring receiver.

RESULT: Signal should consist of six groups of SOS followed by a long dash of approximately 20 seconds duration.

l. Tune monitoring receiver to 8364 KC and turn on beat frequency oscillator switch (BFO) located on receiver.

m. Continue cranking until a signal is heard on monitoring receiver.

RESULT: Radio output light should go off and illuminate with automatic keying and will usually be very dim while transmitter is on 500 KC and very bright during 8364 KC transmission. Same coding cycle should be heard as in step k.

n. Insert plug of signal lamp into signal lamp jack.

o. Set selector switch at SIGNAL LIGHT.

p. Rotate crank at a speed of 80 to 100 RPM and depress pushbutton telegraph key.

RESULT: Lamp should illuminate and react to key operation.

SECTION XXVII
RADAR ALTIMETER AN/APN-22

27-1. DESCRIPTION AND LEADING PARTICULARS.

27-2. This section comprises maintenance instructions for radar altimeter AN/APN-22 installed in HU-16B aircraft, USAF serial numbers 50-0176, 50-0181, 51-0002, 51-0005, 51-0033, and 51-0034, (See figure 27-1.) The radar altimeter is a microwave device for measuring the absolute altitude of the aircraft. The principal components of the radar altimeter are a receiver-transmitter, an amplifier, and an indicator. The nominal range of operation is 0 to 10, 000 feet over land, and 0 to 20, 000 feet over water. The radar altimeter accuracy is ±2 feet at altitudes between 0 and 40 feet, and ±5 percent at altitudes between 40 and 20, 000 feet. All readings on the indicator are linear between 0 and 200 feet, but are compressed logarithmically at altitudes above 200 feet.

27-3. A portion of a frequency-modulated signal radiated to the surface is reflected back to the receiver in the aircraft and compared with the instantaneous transmitter output frequency. During the period between the time the signal is transmitted and the time it arrives back at the receiver, the transmitter frequency has changed, causing a frequency difference between the two signals to exist at the receiver. The frequency difference is converted into a measurement of aircraft altitude. Whenever a signal is too weak to be reliable, the needle on the indicator falls behind a mask. A reliability circuit monitors the received signal strength by measuring the system signal-to-noise ratio when the altitude is greater than 150 feet, and by measuring the sum of the received signal and noise when the altitude is less than 150 feet. The output of the reliability circuit is used to operate a relay which disconnects the height indicator from the servo system, thus providing the pilot with a warning (indicator "drop-out") and a warning light when the received signal is too weak to provide reliable system operation. The indicator "drop-out" occurs at altitudes of approximately 10, 000 feet over land and approximately 20, 000 feet over water. The "drop-out" altitude is reduced during climbs, dives, and turns. Figure 27-2 illustrates the complete system data flow.

27-4. RADAR RECEIVER-TRANSMITTER RT-160/APN-22. (See figure 27-1.) The receiver-transmitter is located in the lower surface of the right wing, and contains the transmitting and receiving antennas. The radar receiver-transmitter generates a frequency-modulated microwave carrier, which is radiated downward from the aircraft. The radar receiver-transmitter receives the reflected signal from the terrain and produces an audio-frequency voltage. The frequency of this voltage is the difference between the instantaneous transmitted and received signal frequencies.

27-5. ELECTRONIC CONTROL AMPLIFIER AM-291/APN-22. (See figure 27-1.) The electronic control amplifier, located on the top shelf, at the aft end of the navigator's position, contains all the required electronic equipment, except the transmitter magnetron, the modulation transformer, the receiver detector crystals, and the limit-light relay amplifier. All the system calibration controls and an altitude indicator dial are located on the front panel. The electronic control amplifier generates the magnetron FM sweep voltage, amplifies the heterodyne beat-frequency difference signal, and converts this signal to a d-c voltage that is proportional in amplitude to the detected audio frequency. This d-c voltage drives a servo system which measures the beat-frequency from 0 to 200 feet, and varies the amplitude of the fm sweep voltage from 200 to 20, 000 feet. The electronic control amplifier provides the synchro output voltage to drive the height indicator.

27-6. HEIGHT INDICATOR ID-257/APN-22. (See figure 27-1.) The height indicator, located in the lower left-hand corner of the main instrument panel, displays aircraft altitude on a circular scale. The height indicator consists of a synchro repeater and the ON-LIMIT control, which is the only control required during operation. The altitude indications are shown by the orientation of a rotating pointer which is displaced linearly over the range of 0 to 200 feet for the first 120 degrees of rotation; the remainder of the scale is logarithmically compressed where the accuracy of meter displacement is less important. The ON-LIMIT control is used to energize the equipment and to adjust the position of a limit bug (pointer stop) on the periphery of the circular scale. The equipment circuitry provides a lamp that lights when altitude sensing has driven the pointer into this preset stop. This operation is used to provide a reference for flying at fixed altitudes. The indicating lamp for this operation is the same one used to indicate unreliability (refer to paragraph 27-3).

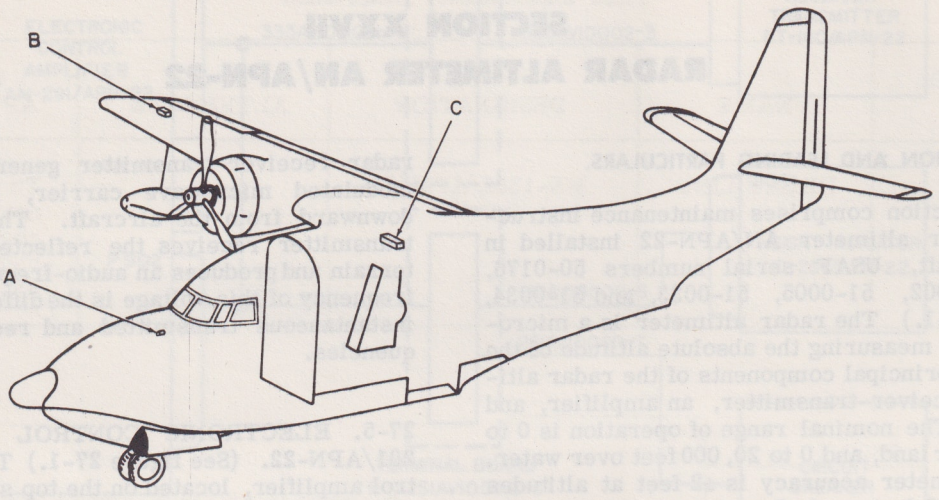

A

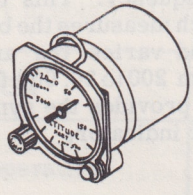

HEIGHT INDICATOR
ID-257/APN-22

B

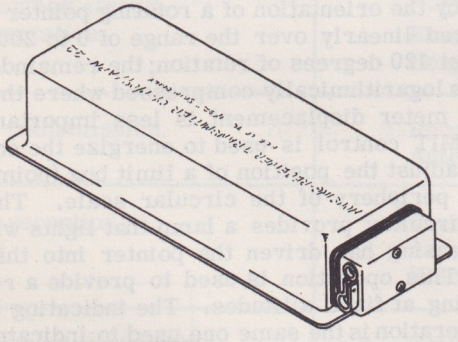

RECEIVER TRANSMITTER
RT-160/APN-22
IN HOUSING CY-1409/APN-22

C

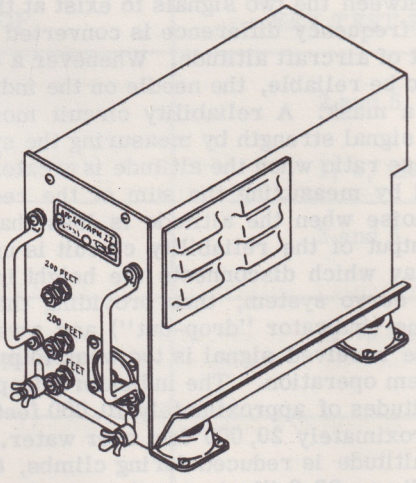

ELECTRONIC CONTROL AMPLIFIER
AM-291/APN-22

Figure 27-1 Radar Altimeter AN/APN-22 Component Locations

27-7. OPERATIONAL CHECKOUT.

TEST EQUIPMENT REQUIRED

FIGURE AND INDEX NO.	NAME	TYPE DESIGNATION	ALTERNATE	USE AND APPLICATION
(None)	DELAY LINE	MX-1381/APM-66		To perform operational check out of radar altimeter AN/APN-22.

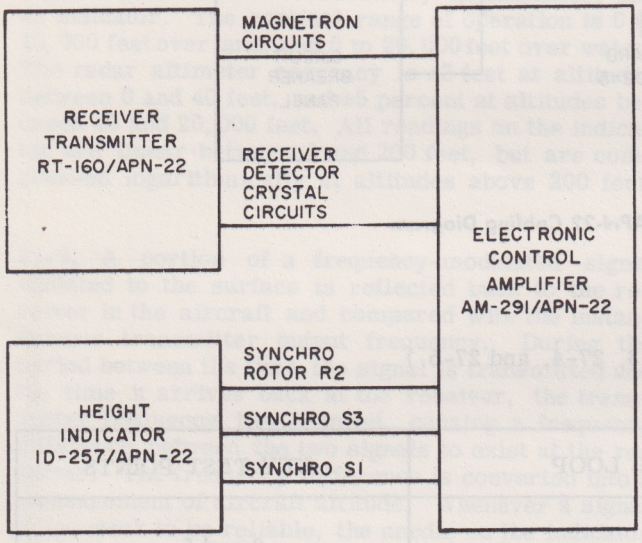

Figure 27-2 Radar Altimeter AN/APN-22 Complete Functional Data Flow

27-8. OPERATIONAL CHECKOUT OF AN/APN-22.

a. Make sure aircraft is electrically grounded to an unpainted surface on either main landing gear or nose gear.

b. Connect 28-volt d-c power to EXTERNAL D. C. POWER receptacle.

c. Push in ALTM DC circuit breaker on the circuit breaker panel.

d. Energize No. 1 inverter, and push in ALTM AC circuit breaker on circuit breaker panel. Permit equipment to warm up for approximately 15 minutes.

e. Place delay line flush against face of receiver-transmitter.

RESULT: Height indicator should read 170 ±10 feet, less the residual altitude of 12 feet.

f. Place palm of hand over either receiver or transmitter antenna horn.

RESULT: Indicator drop-out mask should fall in front of needle, and altitude limit lamp should glow.

g. Set limit bug above altitude reading.

RESULT: Altitude limit lamp should glow.

h. Set limit bug below altitude reading.

RESULT: Altitude limit lamp should go out.

i. Remove electrical power.

27-9. SYSTEM ANALYSIS.

TEST EQUIPMENT REQUIRED

FIGURE AND INDEX NO.	NAME	TYPE DESIGNATION	ALTERNATE	USE AND APPLICATION
(None)	MULTI-METER	AN/PSM-6	Multimeter, Federal Stock No. 6625-649-4593	To troubleshoot radar altimeter AN/APN-22.

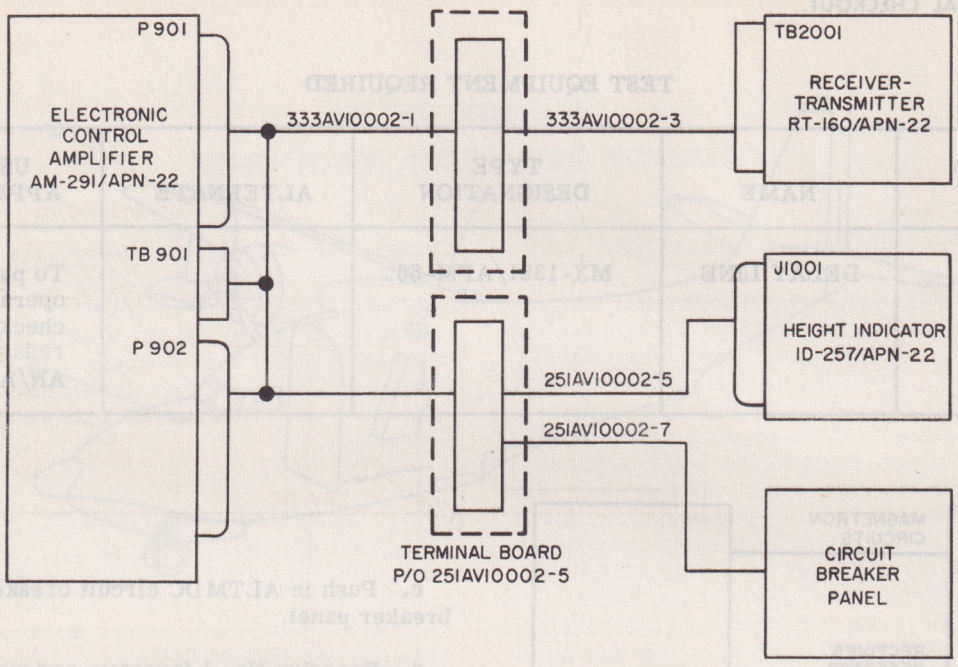

Figure 27-3 Radar Altimeter AN/APN-22 Cabling Diagram

27-10. TROUBLESHOOTING AN/APN-22. (See figures 27-3, 27-4, and 27-5.)

SYMPTOM	FUNCTIONAL LOOP	KEY TEST POINTS
Entire set inoperative.	D-C Power. A-C Power.	2 and 5 1, 3, and 4
Limit indicator lamp inoperative.	Indicator Lamp. D-C Power.	3 and 5
Interlock circuit inoperative.	D-C Power. Electronic Control Amplifier. Height Indicator.	3, 4, and 5
No transmission.	Receiver-Transmitter. Antenna.	
No reception.	Receiver-Transmitter. Antenna. Electronic Control Amplifier.	
Indicator inoperative.	Height Indicator. Electronic Control Amplifier.	

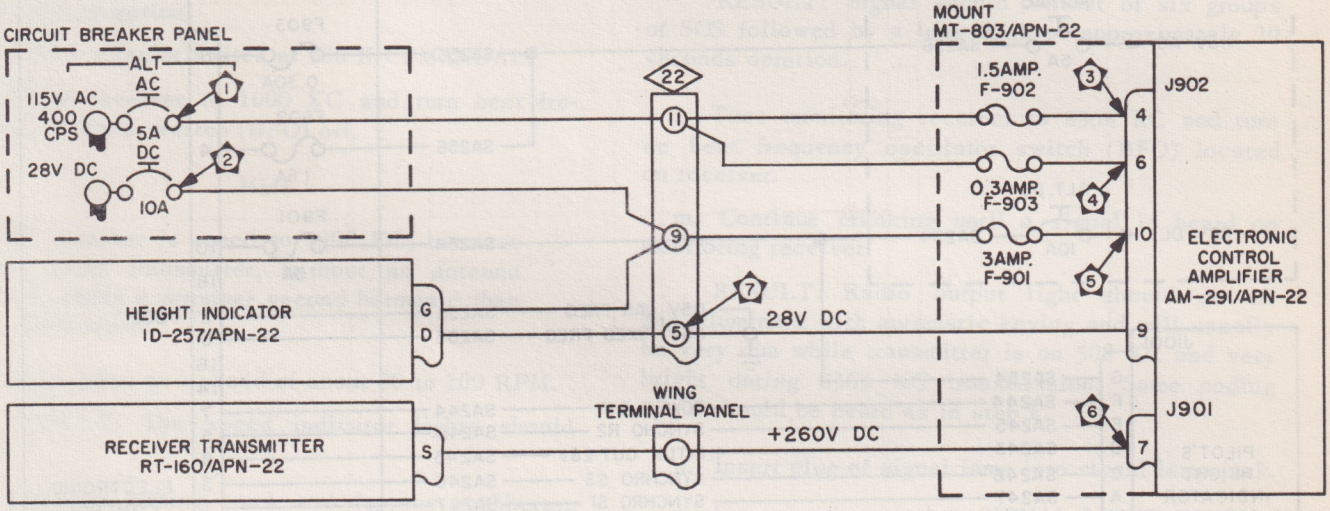

Figure 27-4. Radar Altimeter AN/APN-22 Power Distribution Connection to Aircraft

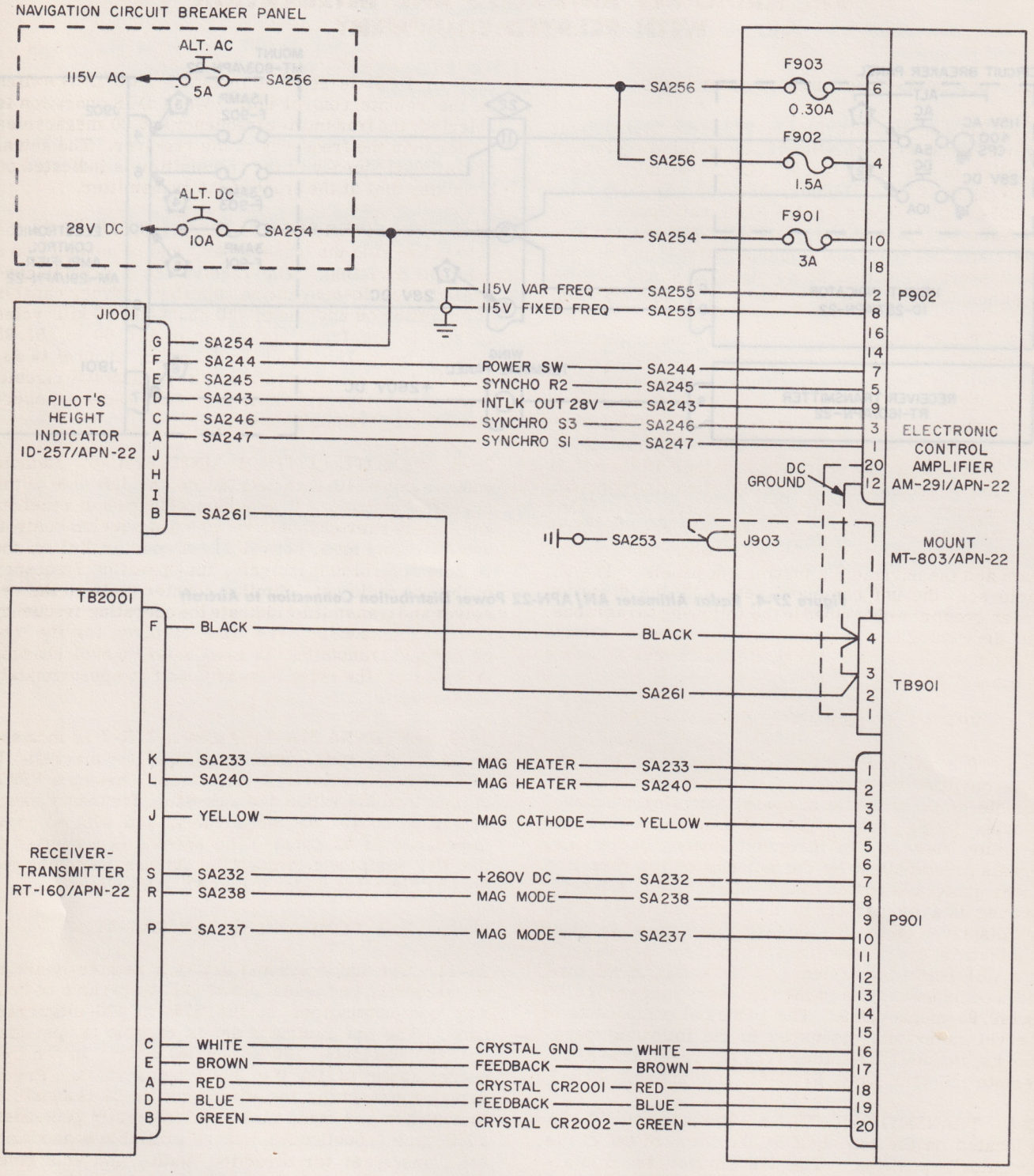

Figure 27-5. Radar Altimeter AN/APN-22 System Intercabling

SECTION XXVIII
VHF RADIO SET AN/ARC-73 AND INTEGRATION WITH RELATED EQUIPMENT

28-1. DESCRIPTION AND LEADING PARTICULARS.

28-2. This section provides maintenance instructions for vhf radio set AN/ARC-73 and related equipment installed in HU-16B aircraft, USAF serial numbers 50-0176, 50-0181, 51-0002, 51-0005, 51-0033, and 51-0034. (See figure 28-1.) The vhf radio set or uhf radio set AN/ARC-27 provides facilities for air-to-air and air-to-ground communications, and in conjunction with direction finder group AN/ARA-25 determines magnetic bearing to fixed ground stations.

28-3. The vhf radio set provides communications in the frequency range from 116.00 to 149.95 megacycles, while the uhf command set provides communications in the 225- to 400-megacycle range. Each of the communication sets may be operated independently for air-to-air and air-to-ground communications. For direction finding operations, either radio set is selected and connected to the direction finder group, and magnetic bearing to fixed ground stations or other aircraft may be determined. The magnetic bearing data is displayed on ID-250/ARN indicators on the main and the navigator's instrument panels. The vhf radio set, the uhf command set, and the direction finder group are described in the following paragraphs, and the contributions of each component to system function are included. Complete functional data flow is illustrated in figure 28-2.

28-4. VHF RADIO SET AN/ARC-73.

28-5. The vhf radio set is crystal-controlled, remote-operated receiving and transmitting equipment capable of three modes of operation: single channel simplex (SCS), double channel simplex (DCS), and direction finding. In direction finding operations, signals are received by the antenna of the direction finder group and routed to the vhf receiver. Magnetic bearing data is generated by the direction finder group and displayed on the ID-250/ARN indicators. In communications operations, the vhf radio set is connected to a VHF blade-type antenna. The vhf radio set provides communications in the frequency range of 116.00 to 149.95 megacycles. The principal components of the vhf radio set, discussed in the following paragraphs, include transmitter 17L-7A, receiver 51X-2B, remote control unit 614U-6, and antenna 37R-2.

28-6. TRANSMITTER 17L-7A. Transmitter 17L-7A is located on the top shelf at the forward end of the navigator's position. The transmitter is crystal-controlled, with the operating frequency selected by remote control unit 614U-6. The transmitter generates an amplitude-modulated signal for vhf communications on any one of 680 channels, 50 kilocycles apart, in the frequency range of 116.00 to 149.95 megacycles. The operating mode for the transmitter (SCS or DCS) is selected by SCS - DCS/DCD switch on the remote control unit. When DCS operation is selected, the transmitter frequency is 6.00 megacycles higher than the frequency of the receiver. The actual operating frequency of the transmitter is indicated on a counter dial at the front of the transmitter.

28-7. RECEIVER 51X-2B. Receiver 51X-2B is located alongside the transmitter, and is mounted on a common mounting. The receiver is a crystal-controlled, double-conversion superheterodyne, capable of operation on any one of 720 channels, 50 kilocycles apart, in the frequency range of 116.00 to 151.95 megacycles. The receiver operating channel is selected by the remote control unit. A disabling circuit, controlled by the transmitter, blocks receiver operation during transmissions.

28-8. REMOTE CONTROL UNIT 614U-6. Remote control unit 614U-6 is located on the left side of the overhead console. It provides selection of receiver and transmitter channel, volume and squelch control, and operating mode selection. A counter dial on the remote control unit indicates the operating frequency of the vhf radio set. Similar counter dials on the receiver and transmitter indicate the operating frequency of the components. The time required for the receiver and transmitter to respond to channel changes directed by the remote control unit is approximately 4 seconds.

28-9. ANTENNA 37R-2. Antenna 37R-2 is mounted on top of the wing center section of the aircraft. It is a vertically polarized vhf antenna, having a VSWR of less than 2:1 within the operating frequency range of 116.00 to 151.95 megacycles, and with an input impedance of 52 ohms. The antenna is connected to the VHF equipment through the antenna switching relays of direction finder group AN/ARA-25.

28-10. UHF COMMAND SET AN/ARC-27.

28-11. The uhf command set is a remote-operated uhf receiving and transmitting station capable of two-way communications in the 225- to 400-megacycle band. The uhf command set is capable of operating on 1750 channels, 100 kilocycles apart, in the frequency range of 225.0 to 399.9 megacycles. Provision for presetting the equipment for 20 channels is included in the equipment. An internally generated, 1020-cycle, continuous tone is available to modulate the transceiver for direction finding and emergency operations. The uhf command set is also used in conjunction with direction finder group AN/ARA-25 to determine the magnetic bearing to fixed uhf stations. A remote control unit permits manual tuning of the equipment, as well as automatic selection of the 20 preset channels. The principal components of the uhf

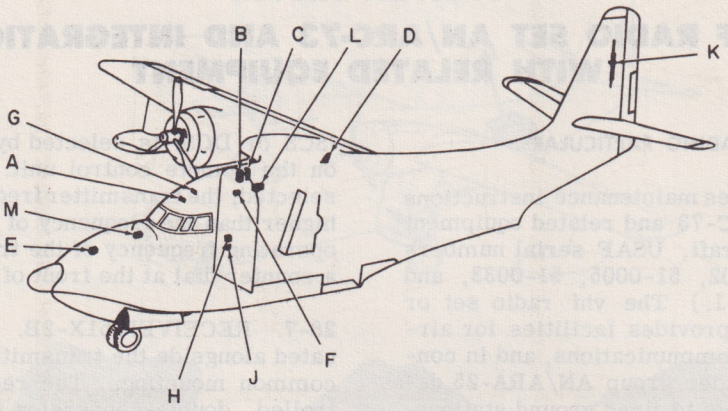

A

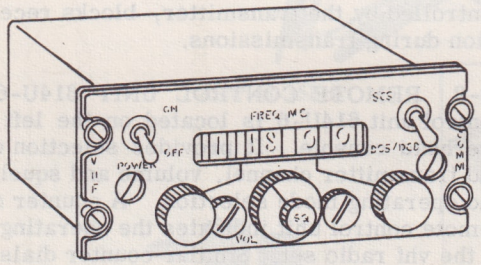

CONTROL UNIT 614U-6

D

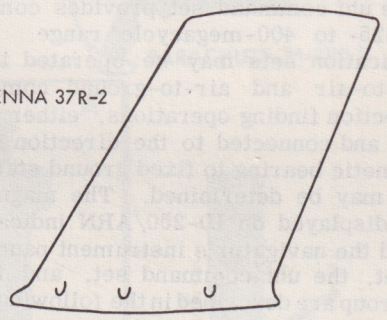

B

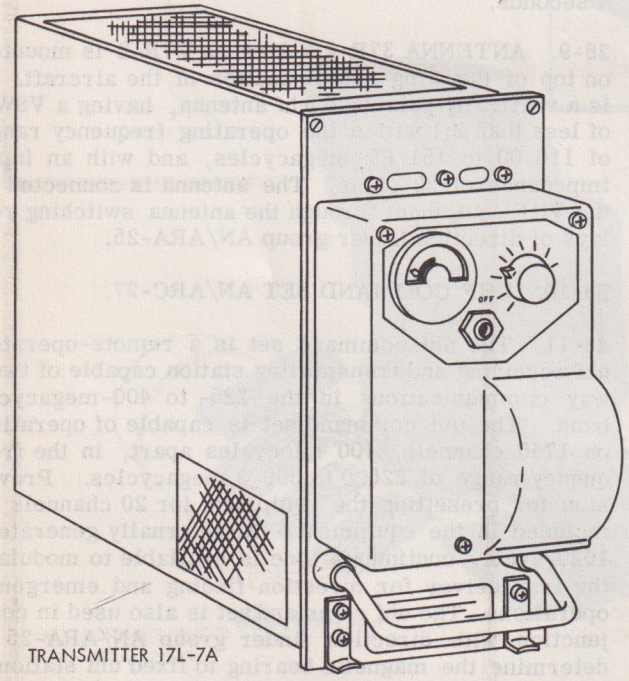

TRANSMITTER 17L-7A

C

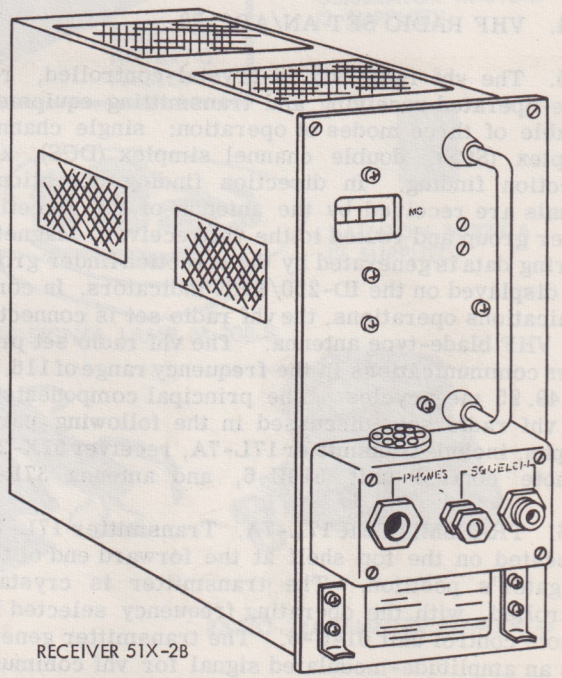

RECEIVER 51X-2B

Figure 28-1. VHF Radio Set AN/ARC-73 and Related Equipment Component Locations (Sheet 1 of 2)

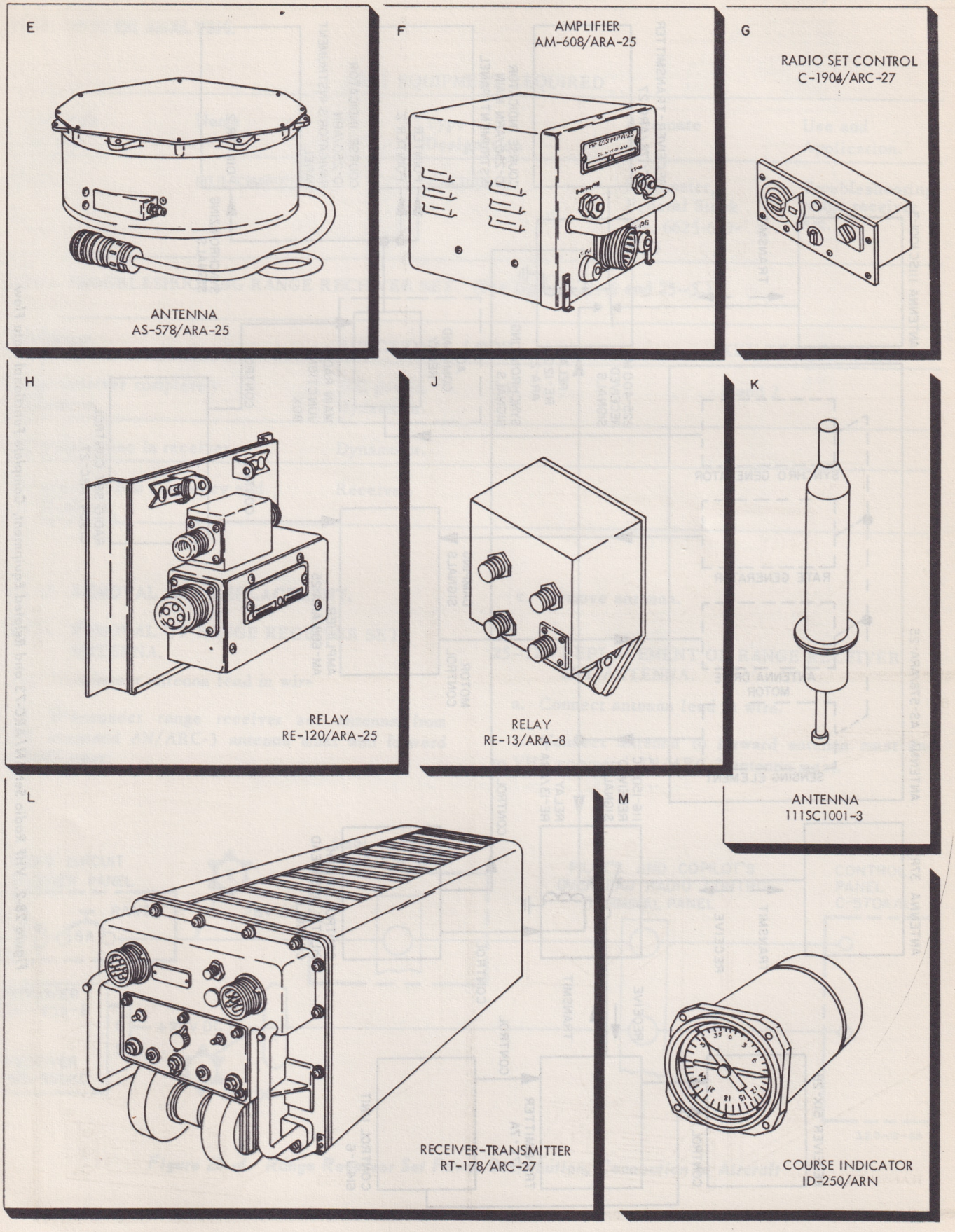

Figure 28-1. VHF Radio Set AN/ARC-73 and Related Equipment Component Locations (Sheet 2 of 2)

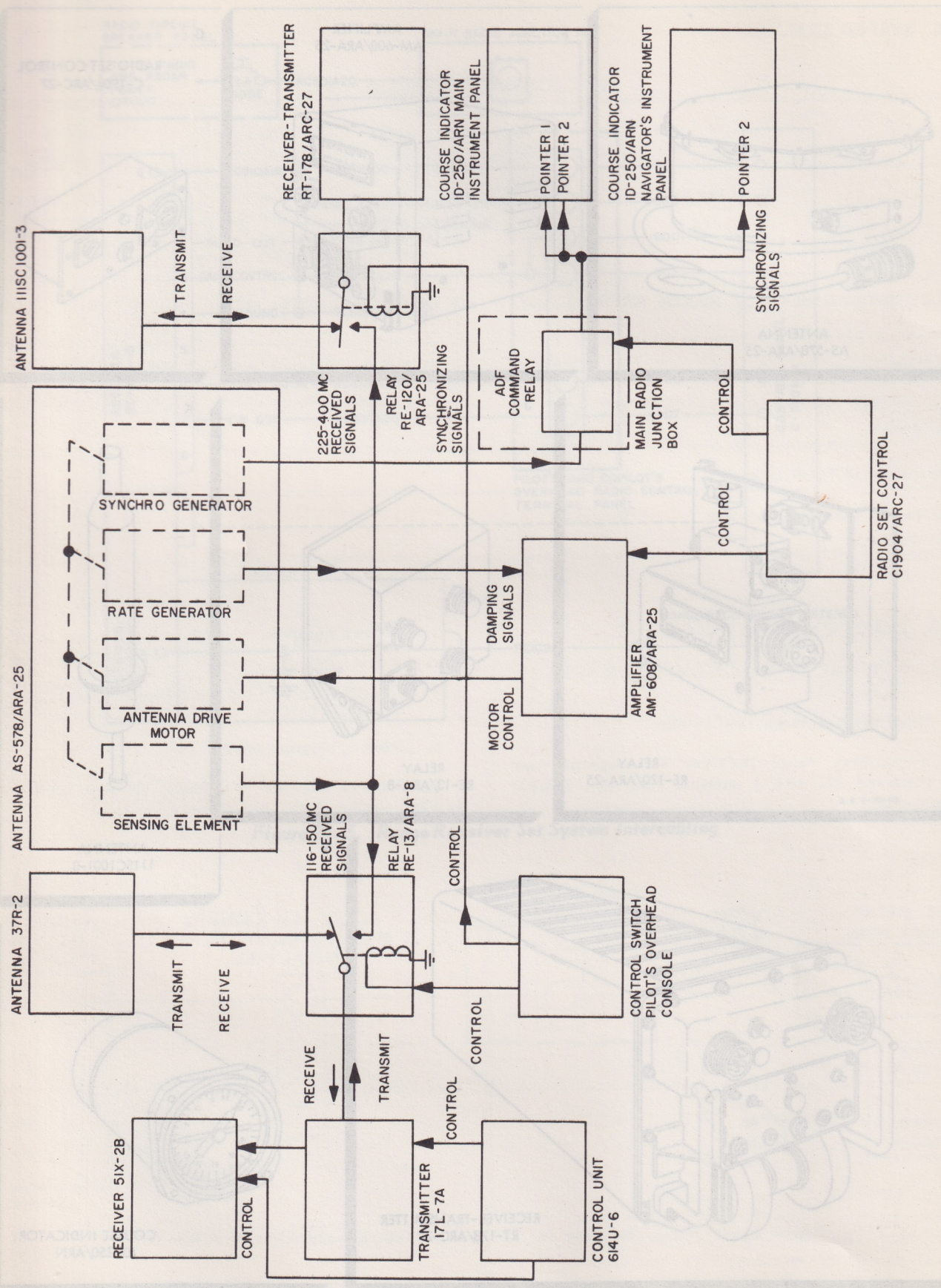

Figure 28-2. VHF Radio Set AN/ARC-73 and Related Equipment, Complete Functional Data Flow

command set, as discussed below, include transceiver RT-178/ARC-27, radio set control C-1904/ARC-27, and antenna 111SC1001-3.

28-12. TRANSCEIVER RT-178/ARC-27. Transceiver RT-178/ARC-27 is located on the top shelf at the forward end of the navigator's position. It provides facilities for receiving and transmitting voice and continuous-wave (CW) communications. The receiver portion of the transceiver contains two complete receiving units, with a common audio output. The first receiver section is a triple-conversion, crystal-controlled superheterodyne. The second receiver section is a double-conversion, adjustable-frequency guard receiver. Either receiver section, or both, may be employed at any time, as selected by the radio set control. The transmitter has a minimum power output of 9 watts on any channel, with an average power output of 16 watts throughout the entire frequency range. An internal dynamotor provides the necessary high voltage power for the transceiver.

28-13. RADIO SET CONTROL C-1904/ARC-27. Radio set control C-1904/ARC-27 is located on the overhead console. It provides facilities for controlling the operation of uhf command set AN/ARC-27. Separate controls are provided for preset channel selection, manual channel selection, mode selection, and volume control.

28-14. ANTENNA 111SC1001-3. Antenna 111SC1001-3 is a quarter-wave antenna, mounted in the tail fin of the aircraft. It is used for both transmitting and receiving during communications operations. The antenna is connected to the transceiver through contacts of the antenna switching relays of direction finder group AN/ARA-25.

28-15. DIRECTION FINDER GROUP AN/ARA-25.

28-16. Direction finder group AN/ARA-25 operates in conjunction with uhf command set AN/ARC-27 and vhf radio set AN/ARC-73 to provide bearing and homing data for signal sources in the uhf and vhf bands, from 225 to 400 megacycles and from 116 to 150 megacycles, respectively. The group uses course indicators ID-250/ARN to indicate the relative bearing of the received signals. The principal components of the direction finder group include amplifier AM-608/ARA-25, antenna AS-578/ARA-25, antenna relay RE-13/ARA-8, antenna relay RE-120/ARA-25, and course indicators ID-250/ARN on the main instrument panel and on the navigator's instrument panel.

28-17. Signals are received by an end-fed antenna, alternating at 100 cps. When the antenna is aligned with a selected radio transmitter, the output of the antenna is unaffected by the directional properties of the antenna. When the antenna is not aligned with the radio transmitter, the signal strength of the antenna on each succeeding half-cycle will not be the same, thus producing a square-wave error signal. The error signal is filtered to remove extraneous signals, amplified, and then fed to a motor control circuit where it is rectified and used to control the antenna drive motor. The drive motor rotates the antenna until it is aligned with the radio transmitter, and a null error signal is obtained. The antenna remains in position until it becomes misaligned with the radio transmitter. A servo assembly synchronizes the rotation of the antenna with course indicators ID-250/ARN.

28-18. AMPLIFIER AM-608/ARA-25. Amplifier AM-608/ARA-25, located on the second shelf at the navigator's position, provides drive and antihunt circuits for controlling antenna AS-578/ARA-25. The amplifier contains a filter, amplifier stages, a phase-detecting motor control circuit, and a vibrator-type synchronous rectifier.

28-19. ANTENNA AS-578/ARA-25. Antenna AS-578/ARA-25, located within the nose section of the aircraft, consists of a rhombic-shaped-element directional antenna, an antenna drive motor, a rate generator, and a synchro generator. Signals received by the antenna are applied to the radio equipment through the antenna switching relays.

28-20. RELAY RE-120/ARA-25. Relay RE-120/ARA-25, located on the top shelf at the navigator's position, is a single-pole, double-throw coaxial relay that connects uhf command set AN/ARC-27 either to the communications antenna, or to homing antenna AS-578/ARA-25.

28-21. RELAY RE-13/ARA-8. Relay RE-13/ARA-8, located on the shelves at the navigator's position, is a single-pole, double-throw coaxial relay that connects vhf radio set AN/ARC-73 either to its own antenna, or to antenna AS-578/ARA-25.

28-22. OPERATIONAL CHECKOUT.

TEST EQUIPMENT REQUIRED

FIGURE AND INDEX NO.	NAME	TYPE DESIGNATION	ALTERNATE	USE AND APPLICATION
(None)	FREQUENCY METER	TS-323/UR		To check operation of direction finder group AN/ARA-25 on vhf.
(None)	TEST OSCILLATOR	TS-24A/ARR		To check operation of direction finder group AN/ARA-25 on uhf.
(None)	REFLECTOMETER		M. C. Jones, Inc. Micromatch, Model MM704	To check operation of vhf radio set AN/ARC-73.

28-23. OPERATIONAL CHECKOUT OF VHF RADIO SET AN/ARC-73 - RECEIVER OPERATION.

a. Make sure aircraft is electrically grounded to an unpainted surface on either main landing gear or nose gear.

b. Connect a microphone and headset to intercommunications set AN/AIC-8 at a master station. Set ICS selector switch to "VHF COMM" position.

c. Connect 28-volt d-c power to EXTERNAL D. C. POWER receptacle.

d. Energize intercommunications set AN/AIC-8 by operating ICS AMPL circuit breaker on the circuit breaker panel.

e. Operate VHF RCVR and VHF XMTR circuit breakers on the circuit breaker panel.

f. Set POWER switch on remote control unit 614U-6 to ON, and allow the equipment to warm up for 15 minutes.

g. Tune receiver, by operating remote control unit, to selected channels within the operating range of receiver. On the noisiest channel, adjust SQ (squelch) control on the remote control unit until the random noise in the headset just disappears.

NOTE

Select approximately 5 channels so that the entire receiver range is covered; for example, 116.50, 123.00, 130.50, 138.50, and 149.00 megacycles.

28-24. OPERATIONAL CHECKOUT OF VHF RADIO SET AN/ARC-73 - TRANSMITTER OPERATION.

a. Set remote control unit 614U-6 to 118.00 MC.

b. Disconnect antenna cable connector at connector A2 of mounting 390E-2.

c. Connect reflectometer MM704 to connector A2 of mounting 390E-2, using a short length of coaxial cable.

d. Connect antenna cable to reflectometer output receptacle.

e. Key transmitter and measure forward power with reflectometer.

RESULT: The forward power shall be a minimum of 20 watts.

f. Key transmitter and measure VSWR with reflectometer.

RESULT: Reflectometer shall indicate a VSWR of 2:1 or less. If the VSWR reading is greater than 2:1, check the antenna installation.

g. Disconnect reflectometer, and restore antenna cable connection to connector A2 of mounting 390E-2.

h. Check to see that receiver audio level is satisfactory for monitoring purposes.

i. Key transmitter and check to see that no sidetone is heard in headset.

j. Set SCS-DCS/DCD switch on remote control unit to DCS/DCD.

RESULT: Frequency counter dials on remote control unit and on receiver shall indicate 118.00 MC, and frequency counter dials on transmitter shall indicate 124.00 MC.

k. Repeat step j, with remote control unit set to the following frequencies, in turn: 124.00, 126.95, 133.00, and 135.95 MC.

RESULT: Transmitter output frequency shall be 6.00 megacycles above setting indicated on remote control unit.

28-25. OPERATIONAL CHECKOUT OF VHF RADIO SET AN/ARC-73 - COMMUNICATIONS OPERATION.

a. Set SCS - DCS/DCD switch of remote control unit 614U-6 to SCS.

b. Contact a known vhf station within range of receiver.

c. Operate vhf set for two-way communication, and check operation of VOLUME control on remote control unit 614U-6.

28-26. OPERATIONAL CHECKOUT OF UHF COMMAND SET AN/ARC-27.

a. Make sure aircraft is electrically grounded to an unpainted surface on either main landing gear or nose gear.

b. Connect a microphone and headset to intercommunications set AN/AIC-8 at a master station. Set ICS selector switch to "UHF COMM."

c. Connect 28-volt d-c power to EXTERNAL D. C. POWER receptacle.

d. Energize UHF COMM circuit breaker on the circuit breaker panel, and allow the equipment to warm up for 15 minutes.

e. Disconnect antenna cable from receptacle J1405 of uhf transceiver.

f. Connect reflectometer MM704 to the antenna receptacle using a short length of coaxial cable. Attach the antenna to the reflectometer output receptacle.

g. Set the function switch of radio set control C-1904/ARC-27 to T/R+G, and PRESET switch to channel 8.

h. Key the transceiver and measure the forward power.

RESULT: Forward power shall be a minimum of 9 watts.

i. Key the transceiver and measure VSWR.

RESULT: Reflectometer shall indicate a VSWR of 2:1 or less. If the VSWR reading is greater than 2:1, check the antenna installation.

j. Disconnect test equipment and restore antenna cable connection to transceiver.

k. Check to see that audio level in headset is satisfactory for monitoring purposes.

l. Key transmitter and check to see that no sidetone is heard in headset.

m. Tune receiver to other channels and adjust SENS controls on transceiver until random noise in headset just disappears.

n. Depress squelch OFF button transceiver.

RESULT: Noise shall appear in headset when OFF button is depressed.

o. Set PRESET switch to G, and repeat step n.

p. Contact a known uhf station within range of the uhf command set for two-way communication, and check operation of VOL. control.

28-27. OPERATIONAL CHECKOUT OF VHF RADIO SET AN/ARC-73 WITH DIRECTION FINDER GROUP AN/ARA-25.

a. Make sure aircraft is electrically grounded to an unpainted surface on either main landing gear or nose gear.

b. Connect 28-volt d-c power to EXTERNAL D. C. POWER receptacle.

c. Energize VHF RCVR, VHF XMTR, and UHF/VHF DF circuit breakers on circuit breaker panel. Allow the equipment to warm up for 15 minutes.

d. set VHF - OFF - UHF switch on overhead console to VHF.

e. Set frequency meter TS-323/UR to a frequency within range of the receiver, and tune receiver to same frequency.

f. Place frequency meter approximately 20 feet dead ahead of aircraft; then place frequency meter at two positions on each side of aircraft centerline.

RESULT: Course indicators ID-250/ARN on navigator's and main instrument panels shall indicate approximate bearing of frequency meter.

g. De-energize vhf radio set.

h. Secure test equipment.

28-28. OPERATIONAL CHECKOUT OF UHF COMMAND SET AN/ARC-27 WITH DIRECTION FINDER GROUP AN/ARA-25.

a. Make sure aircraft is electrically grounded to an unpainted surface on either main landing gear or nose gear.

b. Energize UHF COMM and UHF/VHF DF circuit breakers on circuit breaker panel. Allow equipment to warm up for 15 minutes.

c. Set VHF-OFF-UHF switch on overhead console to UHF.

d. Set test oscillator TS-24A/ARR to a frequency within range of the uhf command set, and tune receiver to same frequency.

e. Place test oscillator approximately 20 feet dead ahead of aircraft; then place test oscillator at two positions on each side of aircraft centerline.

RESULT: Course indicators ID-250/ARN on navigator's and on main instrument panels shall indicate approximate bearing of frequency meter.

f. Secure test equipment.

28-29. SYSTEM ANALYSIS.

TEST EQUIPMENT REQUIRED

FIGURE AND INDEX NO.	NAME	TYPE DESIGNATION	ALTERNATE	USE AND APPLICATION
(None)	MULTIMETER	AN/PSM-6	Multimeter, Federal Stock No. 6625-649-4593	To troubleshoot vhf radio set AN/ARC-73 and related equipment.

28-30. TROUBLESHOOTING VHF RADIO SET AN/ARC-73 AND RELATED EQUIPMENT. (See figures 28-3, 28-4, and 28-5.)

SYMPTOM	FUNCTIONAL LOOP	KEY TEST POINTS
VHF radio set AN/ ARC-73 inoperative.	D-C Power. Relay Assembly. Remote Control Unit 614U-6.	1, 2, 5, 6, 7, and 8
UHF command set AN/ARC-27 inoperative.	D-C Power. Relay Assembly. Radio Set Control C-1904/ARC-27.	3, 9, and 10
VHF receiver 51X-2B inoperative.	D-C Power Receiver 51X-2B. Transmitter 17L-7A. Relay Assembly.	2 and 5
VHF transmitter 17L-7A inoperative.	D-C Power. Relay Assembly.	1, 5, 7, and 8
Direction finder group AN/ARA-25 inoperative.	D-C Power. Amplifier AM-608/ARA-25.	4, 11, 12, 13, and 14
Magnetic bearing not shown by indicator.	D-C Power. Amplifier AM-608/ARA-25. Antenna AS-578/ARA-25. Receiver 51X-2B. Transceiver RT-178/ARC-27. Relay RE-13/ARA-8. Relay RE-120/ARA-25.	12, 13, and 14
Erratic operation of uhf command set AN/ARC-27.	Relay Assembly Relay RE-120/ARA-25. Antenna 111SC1001-3.	
Erratic operation of vhf radio set AN/ARC-73.	Relay Assembly. Relay RE-13/ARA-8. Antenna 37R-2.	

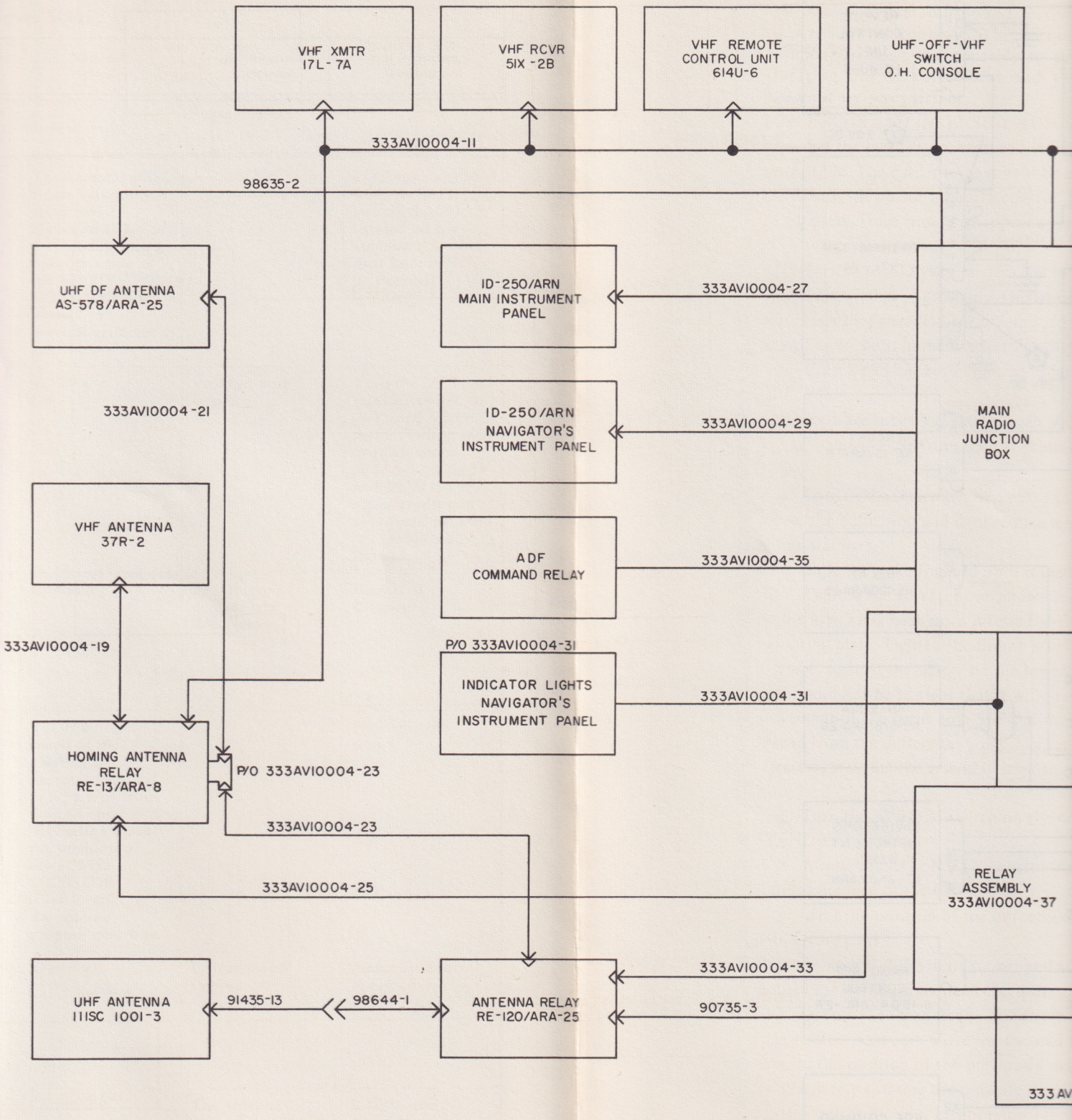

Figure 28-3. VH

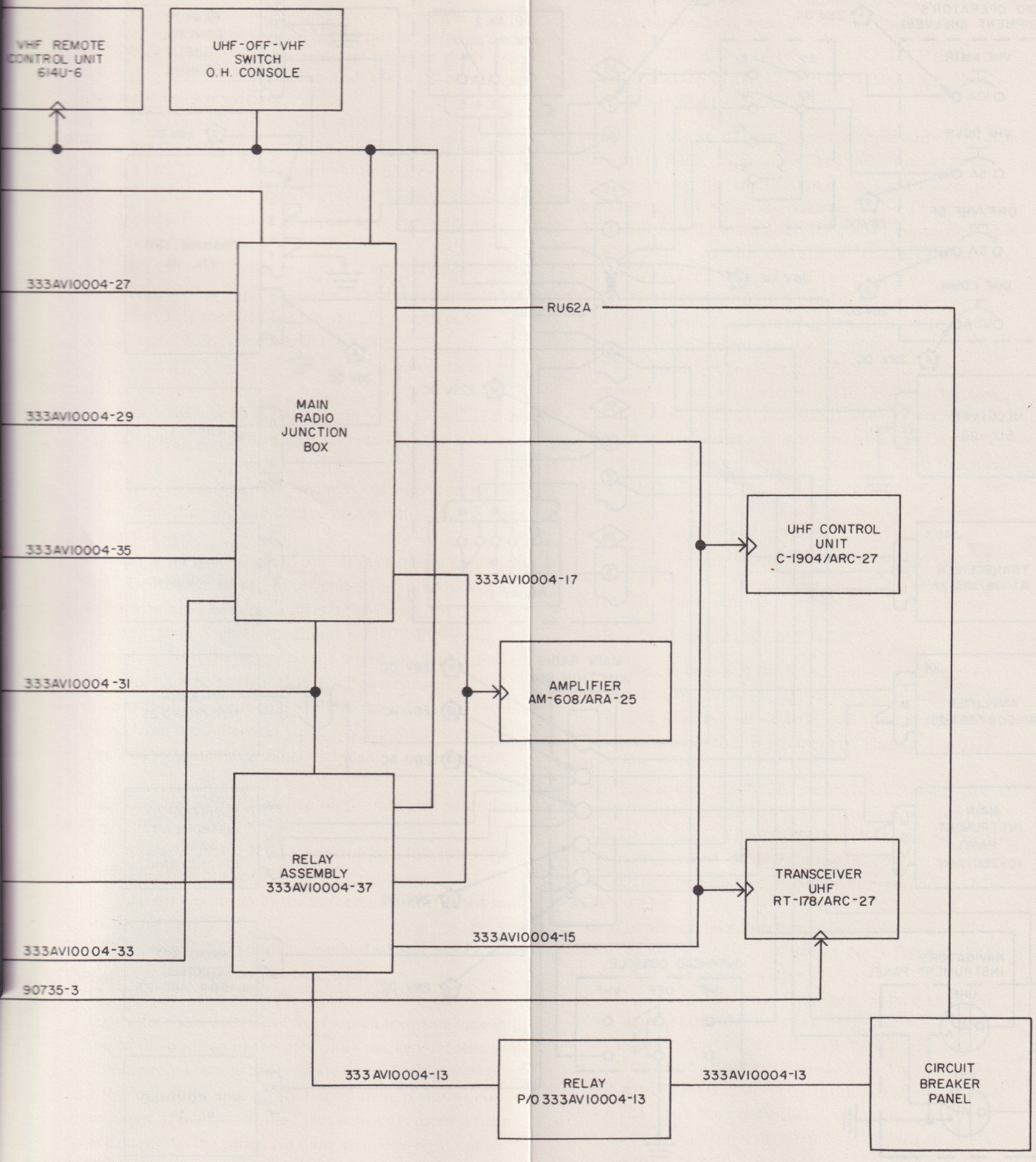

Figure 28-3. VHF Radio Set AN/ARC-73 and Related Equipment Cabling Diagram

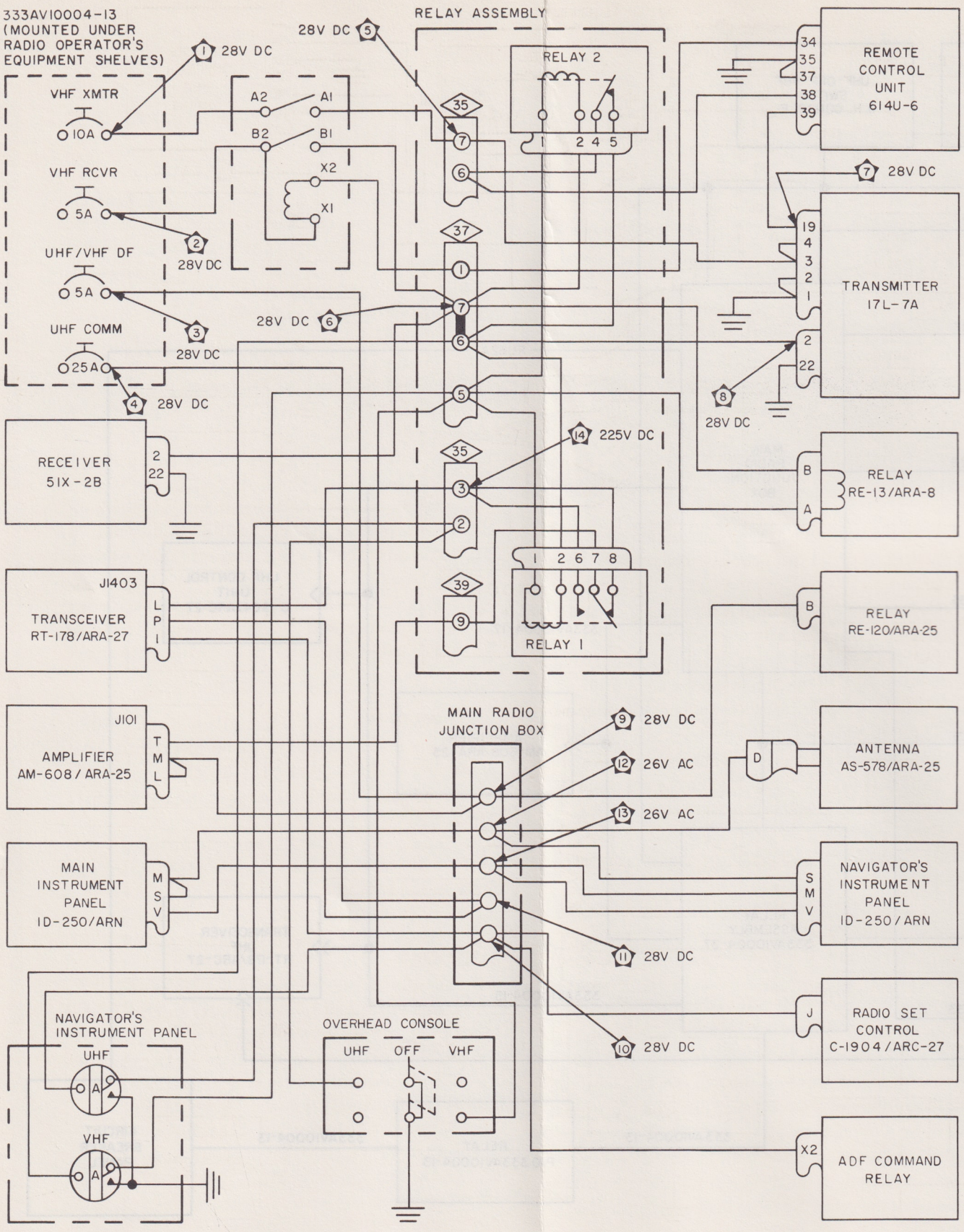

Figure 28-4. VHF Radio Set AN/ARC-73 and Related Equipment, Power Distribution Connection to Aircraft

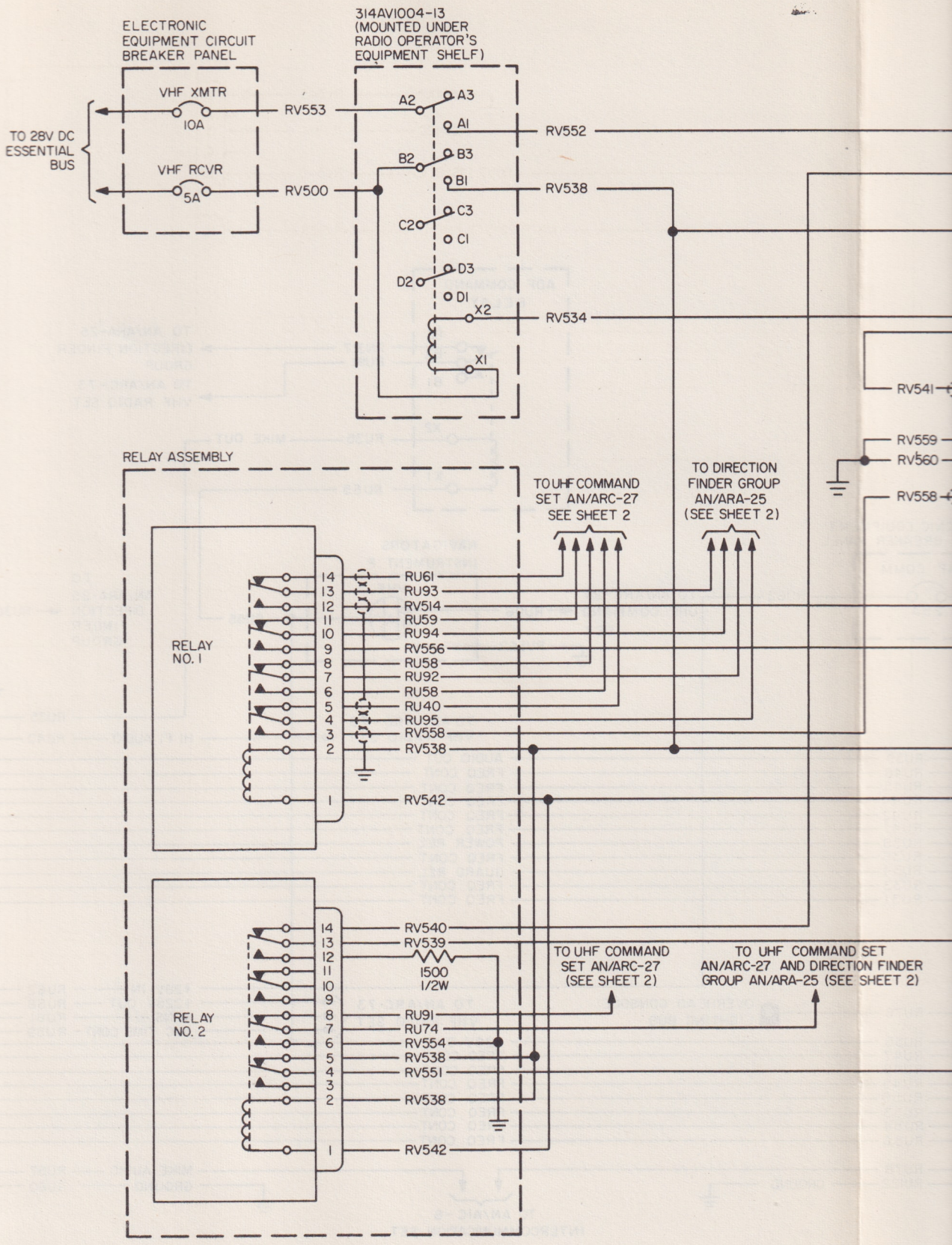
ELECTRONIC EQUIPMENT CIRCUIT BREAKER PANEL
VHF XMTR
10A
VHF RCVR
5A
TO 28V DC ESSENTIAL BUS
RV553
RV500
314AV1004-13 (MOUNTED UNDER RADIO OPERATOR'S EQUIPMENT SHELF)
A2
A3
A1
B2
B3
B1
C2
C3
C1
D2
D3
D1
X2
X1
RV552
RV538
RV534
RV541
RV559
RV560
RV558
RELAY ASSEMBLY
TO UHF COMMAND SET AN/ARC-27 SEE SHEET 2
TO DIRECTION FINDER GROUP AN/ARA-25 (SEE SHEET 2)
RELAY NO. 1
14 RU61
13 RU93
12 RV514
11 RU59
10 RU94
9 RV556
8 RU58
7 RU92
6 RU58
5 RU40
4 RU95
3 RV558
2 RV538
1 RV542
RELAY NO. 2
14 RV540
13 RV539
12
11
10
9
8 RU91
7 RU74
6 RV554
5 RV538
4 RV551
3
2 RV538
1 RV542
1500 1/2W
TO UHF COMMAND SET AN/ARC-27 (SEE SHEET 2)
TO UHF COMMAND SET AN/ARC-27 AND DIRECTION FINDER GROUP AN/ARA-25 (SEE SHEET 2)

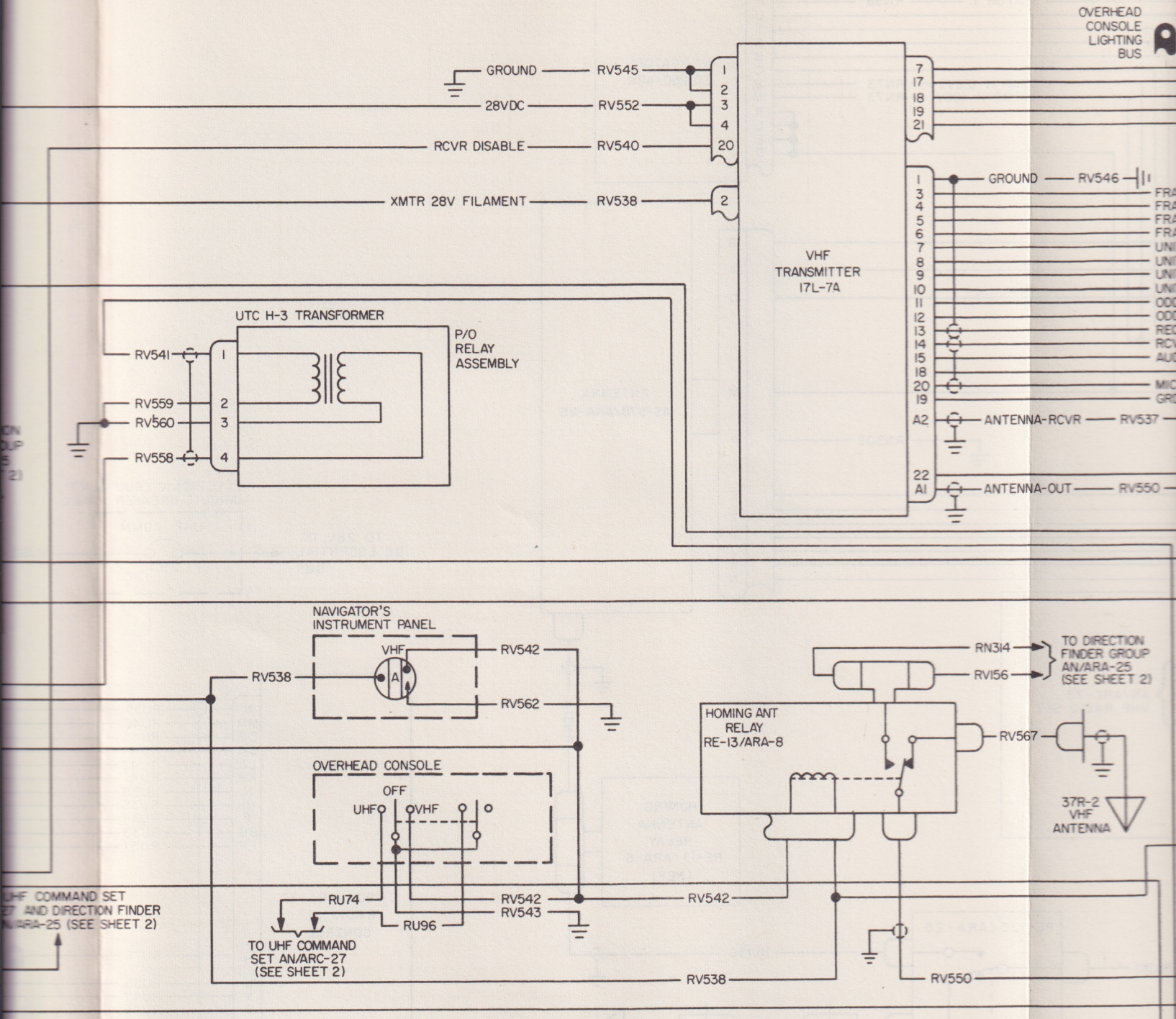

Figure 28-5. VHF Radio S

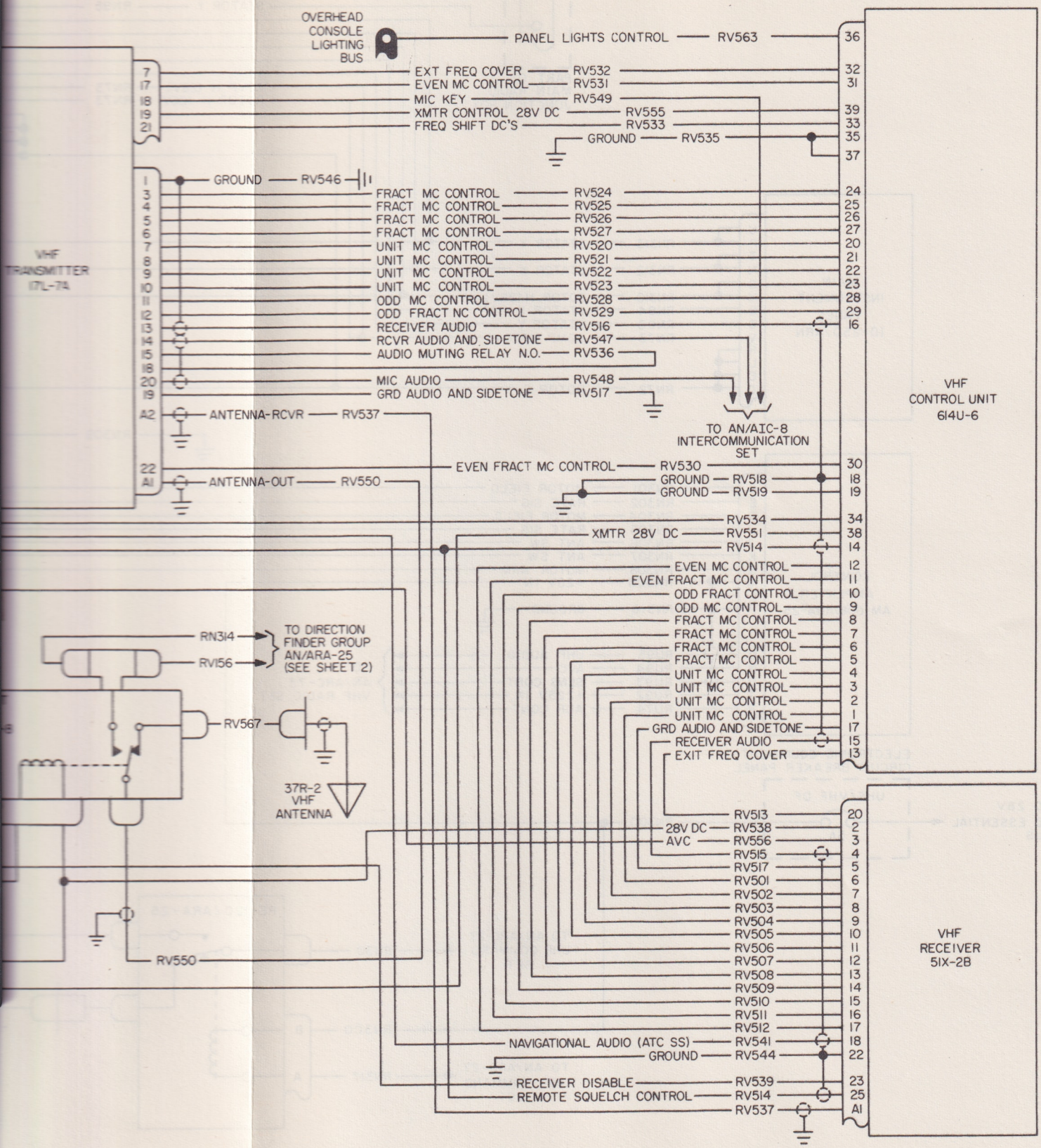

Figure 28-5. VHF Radio Set AN/ARC-73 and Related Equipment, System Intercabling (Sheet 1 of 2)

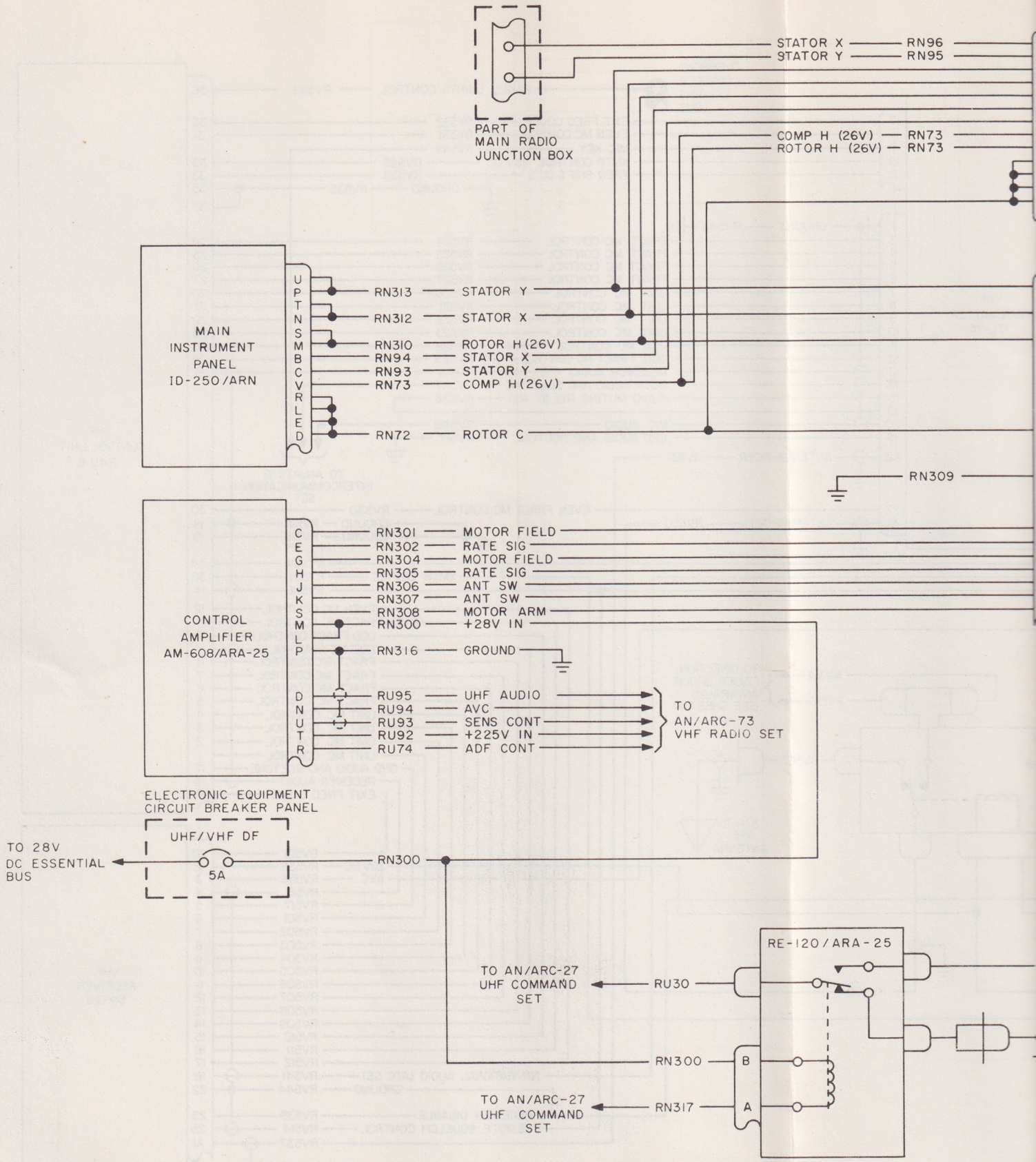
PART OF
MAIN RADIO
JUNCTION BOX
STATOR X — RN96
STATOR Y — RN95
COMP H (26V) — RN73
ROTOR H (26V) — RN73
MAIN
INSTRUMENT
PANEL
ID-250/ARN
UPTNSMBCVRLED
RN313 — STATOR Y
RN312 — STATOR X
RN310 — ROTOR H(26V)
RN94 — STATOR X
RN93 — STATOR Y
RN73 — COMP H(26V)
RN72 — ROTOR C
RN309
CONTROL
AMPLIFIER
AM-608/ARA-25
CEGHJKSMLP
RN301 — MOTOR FIELD
RN302 — RATE SIG
RN304 — MOTOR FIELD
RN305 — RATE SIG
RN306 — ANT SW
RN307 — ANT SW
RN308 — MOTOR ARM
RN300 — +28V IN
RN316 — GROUND
DNUTR
RU95 — UHF AUDIO
RU94 — AVC
RU93 — SENS CONT
RU92 — +225V IN
RU74 — ADF CONT
TO
AN/ARC-73
VHF RADIO SET
ELECTRONIC EQUIPMENT
CIRCUIT BREAKER PANEL
UHF/VHF DF
5A
TO 28V
DC ESSENTIAL
BUS
RN300
RE-120/ARA-25
TO AN/ARC-27
UHF COMMAND
SET
RU30
RN300
B
TO AN/ARC-27
UHF COMMAND
SET
RN317
A

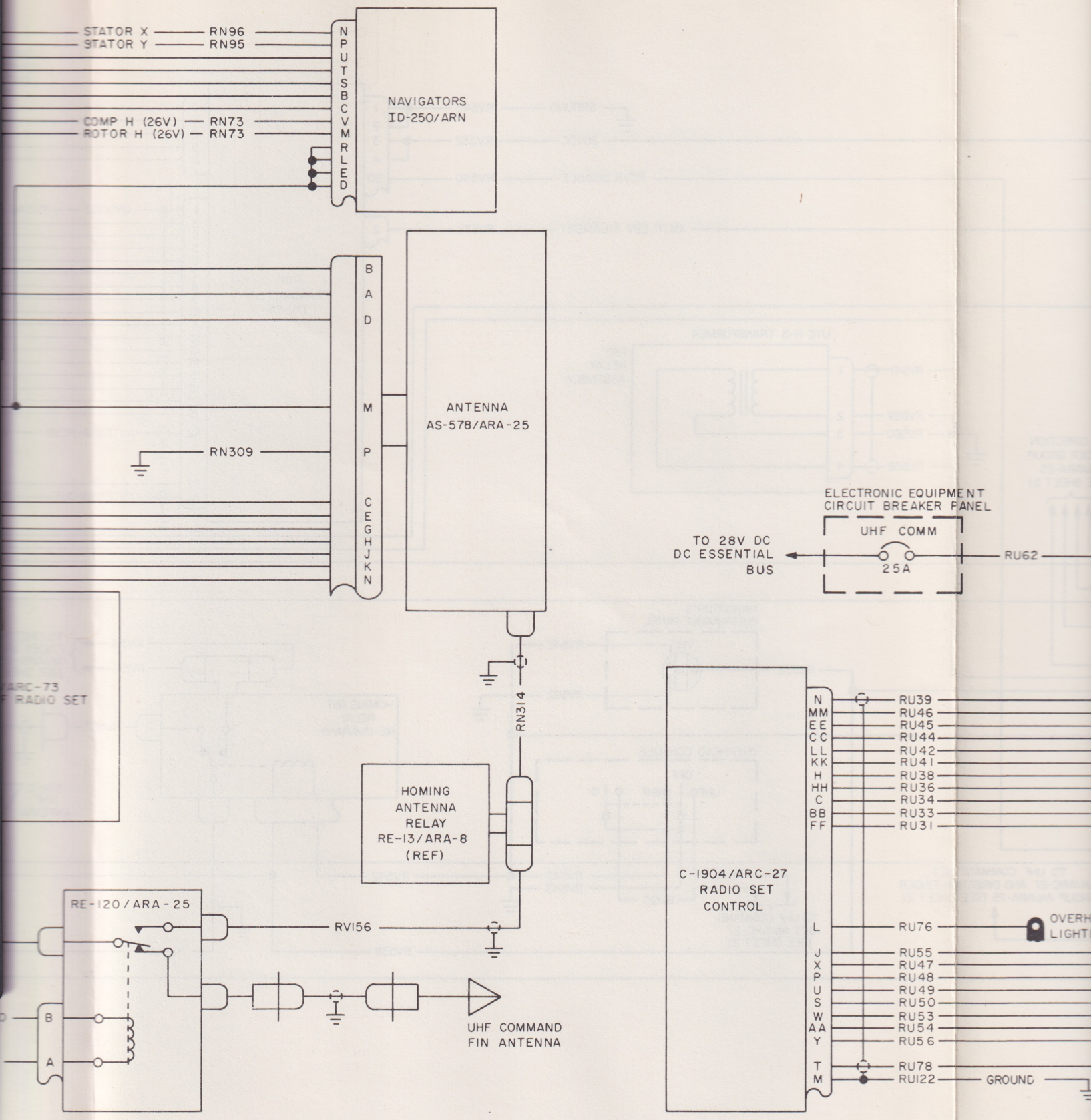
STATOR X
STATOR Y
RN96
RN95
COMP H (26V)
ROTOR H (26V)
RN73
RN73
N P U T S B C V M R L E D
NAVIGATORS
ID-250/ARN
B A D
M P
C E G H J K N
ANTENNA
AS-578/ARA-25
RN309
ELECTRONIC EQUIPMENT
CIRCUIT BREAKER PANEL
UHF COMM
TO 28V DC
DC ESSENTIAL
BUS
25A
RU62
RN314
HOMING
ANTENNA
RELAY
RE-13/ARA-8
(REF)
RE-120/ARA-25
RV156
B
A
UHF COMMAND
FIN ANTENNA
C-1904/ARC-27
RADIO SET
CONTROL
N
MM
EE
CC
LL
KK
H
HH
C
BB
FF
RU39
RU46
RU45
RU44
RU42
RU41
RU38
RU36
RU34
RU33
RU31
L
RU76
J
X
P
U
S
W
AA
Y
RU55
RU47
RU48
RU49
RU50
RU53
RU54
RU56
T
M
RU78
RU122
GROUND

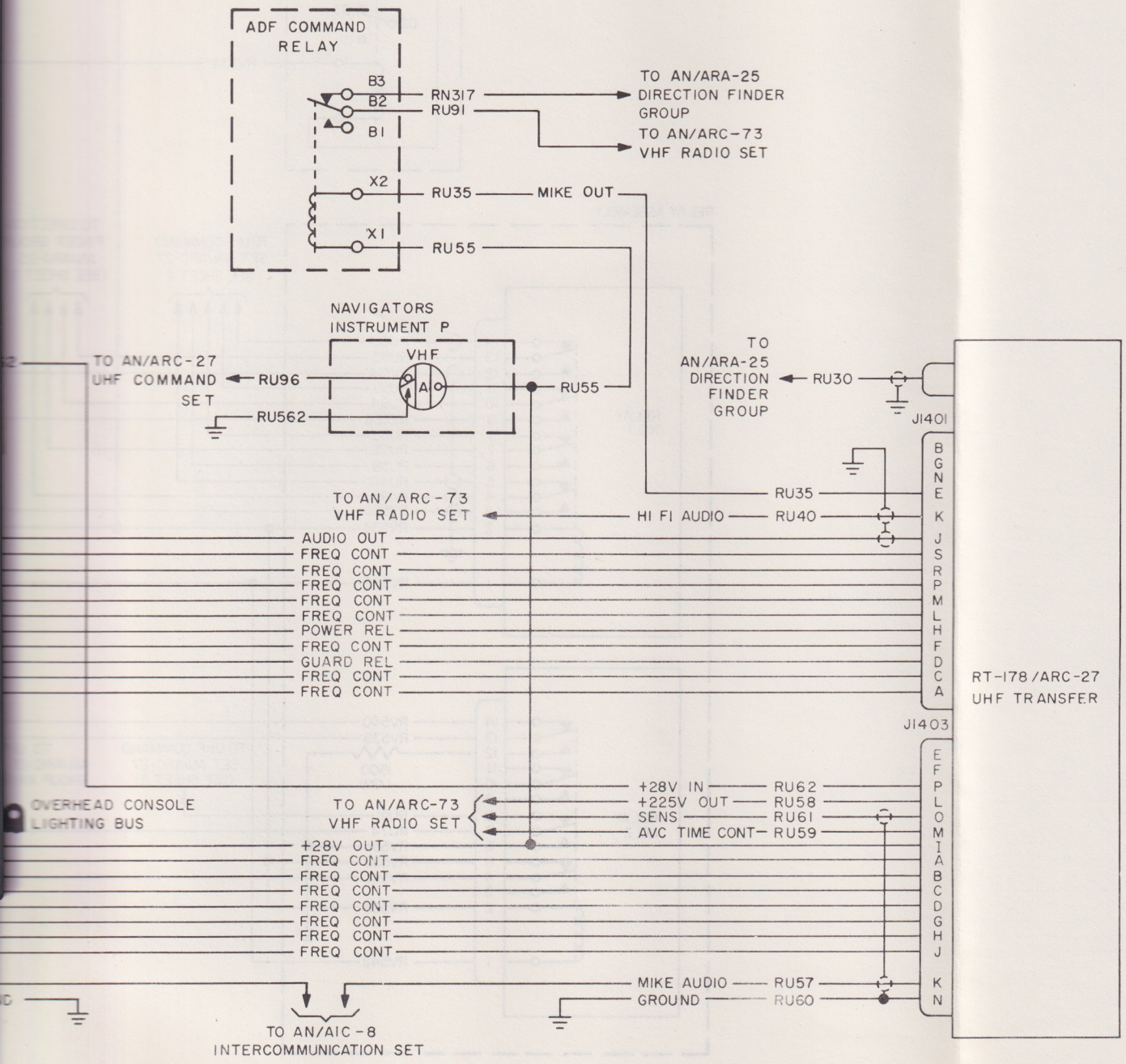

Figure 28-5. VHF Radio Set AN/ARC-73 and Related Equipment, System Intercabling (Sheet 2 of 2)

SECTION XXIX
DOPPLER RADAR SET AN/APN-501G

29-1. DESCRIPTION AND LEADING PARTICULARS.

29-2. This section contains maintenance instructions for doppler radar set AN/APN-501G installed in HU-16B aircraft, USAF serial numbers 50-0176, 50-0181, 51-0002, 51-0005, 51-0033, and 51-0034. (See figure 29-1.) The doppler radar set provides directly measured groundspeed and drift angle, without the aid of ground stations. This data (in digital and analog form) is fed into a computer system and is combined with heading to provide offset distance and distance to go. The doppler radar set consists of a computer controller, a track error indicator, a groundspeed/drift angle indicator, a doppler control unit, an antenna unit, a computer, a signal-data comparator, and a receiver-transmitter. Figure 29-2 illustrates complete system functional data flow.

29-3. A frequency-modulated beam is radiated toward the ground, forward and aft of the aircraft, from the transmitting antenna. The reflected energy is picked-up by the receiving antennas from the fore-starboard and aft-port directions. The receiving antennas are then shifted, and the reflected energy is picked up from the fore-port and aft-starboard directions. The receiving antennas are continuously shifted, at the rate of approximately one cycle in every 1-1/2 seconds. The computer measures the distance flown by counting the number of cycles in a given time.

29-4. The total frequency shift in the fore-starboard and aft-port beams and the total frequency shift in the fore-port and aft-starboard beams are measured, and the two frequency shifts are compared. The antenna system is automatically rotated until the frequency shifts are equal. The direction of the antenna system in relation to the longitudinal axis of the aircraft is then the drift angle. The distance to go and the cross-track distance are computed from the drift angle, the heading information, and the tracker oscillator of the doppler sensor.

29-5. COMPUTER CONTROLLER 2318-000/CMA-601G. The computer controller, located on the folding console, permits the pilot to insert course and distance information for a desired destination; the computer controller provides an indication of the distance to go and the distance deviated from the desired track. Two such course-distance conditions may be inserted at the same time, although the computer uses only one at a time. An automatic feature is provided to switch from the first course and distance to the second when the aircraft has traversed the initial track. Changes in the course and distance conditions may be made at any time during the flight.

29-6. TRACK ERROR INDICATOR 2450-650/CMA-601G. The track error indicator, located on the main instrument panel, provides the pilot with distance to go and track deviation data, based upon the track programmed at the computer controller. Distance to go data is provided on the counter dials of the instrument, while the track error is indicated by a moving bar. A pointer on the instrument shows the aircraft heading with respect to the course track; ideally, the heading pointer should always lie on the bar of the track deviation, and aircraft maneuvers should be performed, as required, to maintain this condition. An indicator light is provided on the instrument to inform the pilot that there are only 10 miles remaining along the given track.

29-7. GROUNDSPEED/DRIFT ANGLE INDICATOR CMC450-655E/APN-501G. The groundspeed/drift angle indicator, located on the main instrument panel, contains a pointer and a counter that display drift angle (in degrees) and groundspeed (in knots), respectively. A memory warning light and an OFF warning flag indicate unreliable readings due to equipment malfunction or loss of signal. The indications are "frozen" at their last reliable readings if the system fails to track properly.

29-8. DOPPLER CONTROL UNIT 2320-490/APN-501G. Various control switches and three panel lights (one of which is a warning light) are on the control unit, which is located on the folding console. The POWER ON-SLEW-OFF switch is a three-position locking switch for applying (or removing) power to the equipment. The G/S-INCR-DECR switch is a three-position, spring-return switch, which is used initially to set up an approximate takeoff groundspeed. The DR LEFT-RIGHT switch is a three-position, spring-return switch and is used initially to set up an approximate takeoff drift angle. The LAND-SEA switch is a three-position locking switch that changes the calibration of the system to ensure the same accuracy of groundspeed indication whether flying over land or water.

29-9. ANTENNA UNIT 2320-470/APN-501G. The antenna unit, located in the lower part of the right wing of the aircraft, between stations 184 and 204, consists of one transmitting and two receiving antennas. The transmitting antenna is made up of two parts; one part is the radiator itself, consisting of a length of rectangular waveguide in which slots have been cut, forming a linear array of radiating elements; the other part consists of two sections of sheet metal attached along the length of the waveguide, forming a beam-shaping horn. This combination of array and horn results in two fan-shaped beams. The receiving antenna consists of two independent elements and is backed by a reflector. It also has slotted waveguides, each with a beam-shaping horn. A motor-driven mechanism is used to interchange the receiving antenna reflectors at a fixed rate.

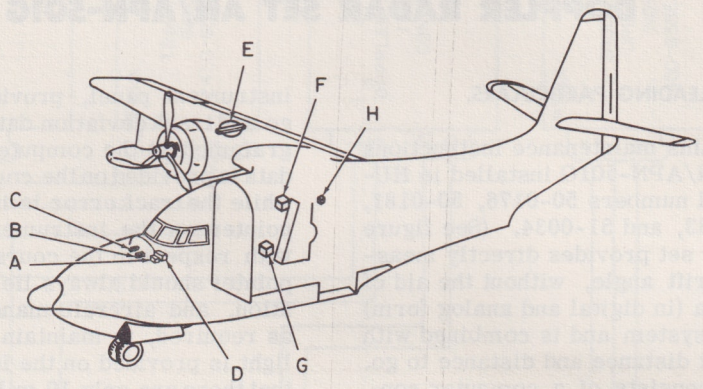

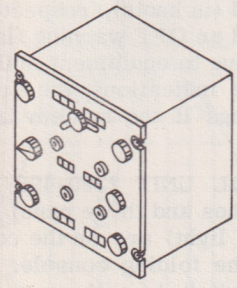

COMPUTER CONTROLLER
UNIT 2318-000/CMA-601G

A

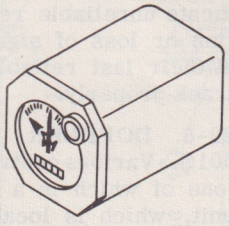

TRACK ERROR INDICATOR
2450-650/CMA-601G

B

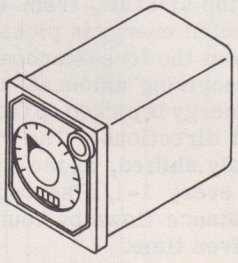

GROUNDSPEED-DRIFT
ANGLE INDICATOR
450-655E/APN-501G

C

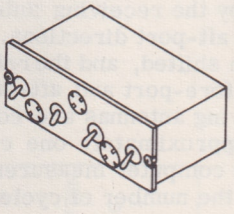

DOPPLER CONTROL UNIT
2320-490/APN-501G

D

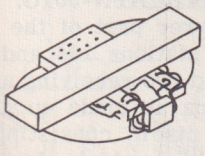

ANTENNA UNIT
2320-470/APN-501G

E

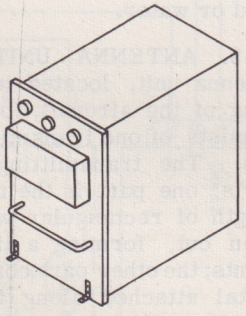

COMPUTER
433-300/CMA-601G

F

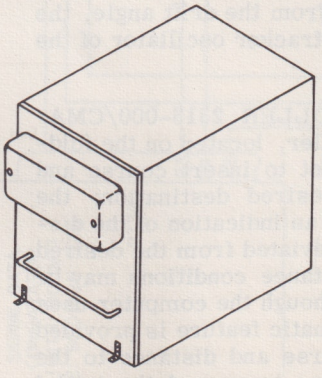

SIGNAL DATA
COMPARATOR
2321-800/APN-501G

G

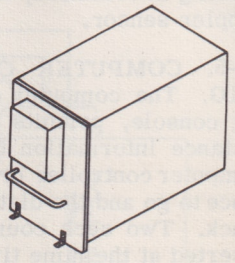

RECEIVER-TRANSMITTER
2321-850/APN-501G

H

Figure 29-1. Doppler Radar Set AN/APN-501G Component Locations

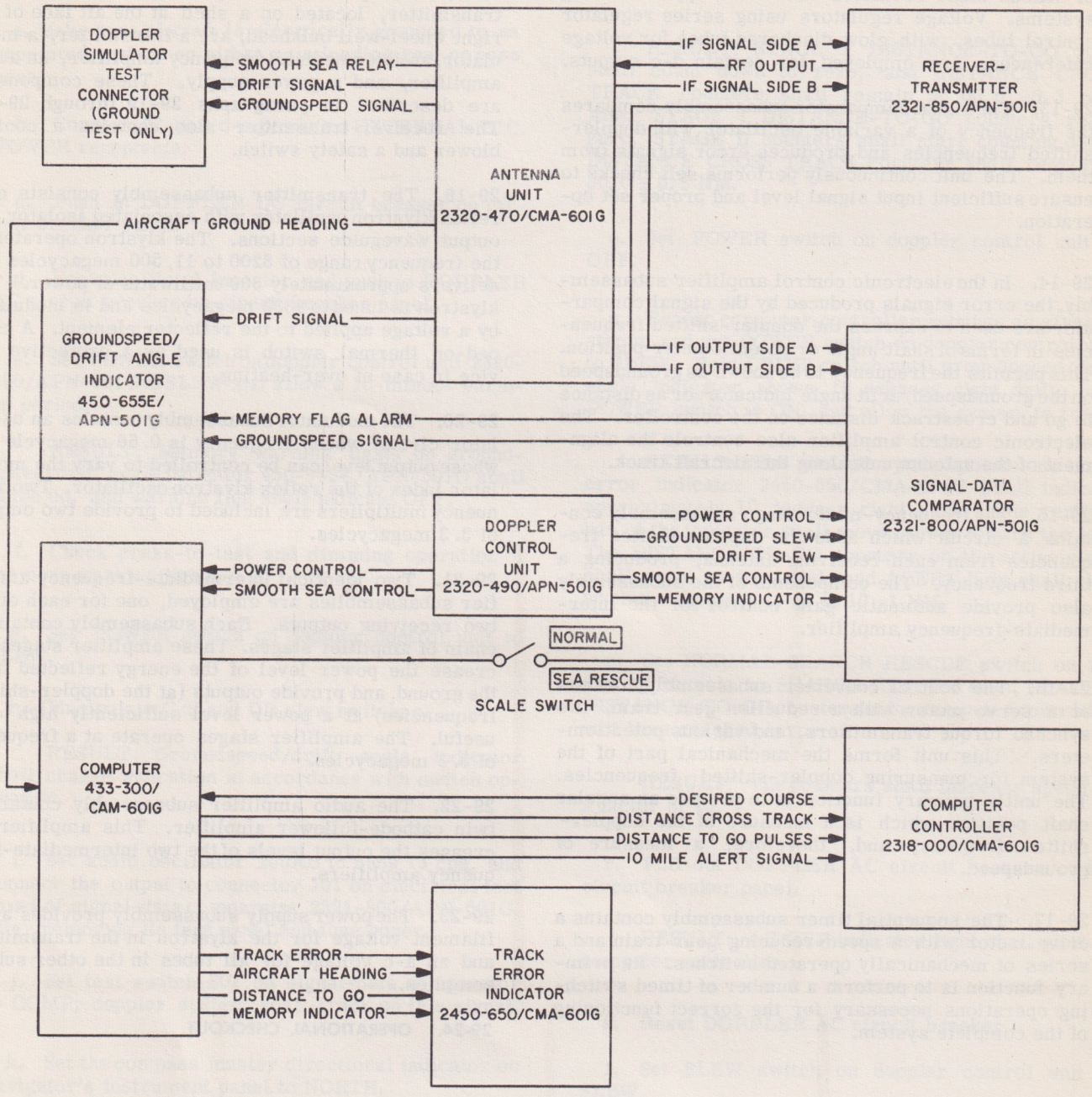

Figure 29-2. Doppler Radar Set AN/APN-501G Complete Functional Data Flow

29-10. COMPUTER 433-300/CMA-601G. The digital computer, located on the top shelf, at the aft end of the radar navigator's position (approximately station 300), is made up of plug-in assemblies, some of which are printed circuits. The computer resolves and integrates heading, aircraft drift, information, and doppler data from the doppler sensor. The outputs of the computer are used to control the indicators of the doppler radar set. There are no switches or controls on the computer. The computer is placed in operation, automatically, when the doppler radar set is energized.

29-11. SIGNAL-DATA COMPARATOR 2321-800/APN-501G. The principal components of the signal-data comparator, located on a shelf beneath the navigator's table, are a power supply, a signal comparator, an electronic control amplifier, a frequency mixer stage, a control converter, and a sequential timer. These components are described in paragraphs 29-12 through 29-17.

29-12. The power supply subassembly provides filament voltages for all tubes of the comparator group and plate and bias voltages for the entire doppler

radar set. The d-c voltages are derived from groups of silicon-diode rectifiers used with ripple-filtering systems. Voltage regulators using series regulator control tubes, with glow discharge tubes for voltage references, are employed for certain d-c outputs.

29-13. The signal comparator subassembly compares the frequency of a variable oscillator with doppler-shifted frequencies and produces error signals from them. The unit continuously performs self checks to ensure sufficient input signal level and proper set operation.

29-14. In the electronic control amplifier subassembly, the error signals produced by the signal comparator are used to express the doppler-shifted frequencies in terms of shaft angle or potentiometer position. This permits the frequency to be shown as groundspeed on the groundspeed/drift angle indicator, or as distance to go and crosstrack distance on the controller. The electronic control amplifier also controls the alignment of the antenna unit along the aircraft track.

29-15. The frequency-mixer stage subassembly contains a circuit which adds the doppler-shifted frequencies from each receiving antenna, producing a third frequency. The components of the subassembly also provide automatic gain control for the intermediate-frequency amplifier.

29-16. The control converter subassembly consists of a servo motor with a reduction gear train, two synchro torque transmitters, and various potentiometers. This unit forms the mechanical part of the system for measuring doppler-shifted frequencies. The unit's primary function is to provide an angular shaft position which is a measure of the doppler-shifted frequency and, therefore, a measure of groundspeed.

29-17. The sequential timer subassembly contains a drive motor with a speed-reducing gear train and a series of mechanically operated switches. Its primary function is to perform a number of timed switching operations necessary for the correct functioning of the complete system.

29-18. RECEIVER-TRANSMITTER 2321-850/APN-501G. The principal components of the receiver-transmitter, located on a shelf at the aft face of the right wheel-well bulkhead, are a transmitter, a modulator, an intermediate-frequency amplifier, an audio amplifier, and a power supply. These components are described in paragraphs 29-19 through 29-23. The receiver-transmitter also contains a cooling blower and a safety switch.

29-19. The transmitter subassembly consists of a reflex klystron oscillator with associated isolator and output waveguide sections. The klystron operates in the frequency range of 8200 to 11,500 megacycles and delivers approximately 500 milliwatts of power. The klystron is tuned to 9830 megacycles and is modulated by a voltage applied to the reflector element. A clipped-on thermal switch is used as a protective device in case of over-heating.

29-20. The modulator subassembly contains an oscillator circuit whose frequency is 0.66 megacycle and whose output level can be controlled to vary the modulator index of the reflex klystron oscillator. Two frequency multipliers are included to provide two outputs of 3.3 megacycles.

29-21. Two identical intermediate-frequency amplifier subassemblies are employed, one for each of the two receiving outputs. Each subassembly contains a chain of amplifier stages. These amplifier stages increase the power level of the energy reflected from the ground, and provide outputs (at the doppler-shifted frequencies) at a power level sufficiently high to be useful. The amplifier stages operate at a frequency of 3.3 megacycles.

29-22. The audio amplifier subassembly contains a twin cathode-follower amplifier. This amplifier increases the output levels of the two intermediate-frequency amplifiers.

29-23. The power supply subassembly provides a d-c filament voltage for the klystron in the transmitter, and an a-c voltage for all tubes in the other subassemblies.

29-24. OPERATIONAL CHECKOUT.

TEST EQUIPMENT REQUIRED

FIGURE AND INDEX NO.	NAME	TYPE DESIGNATION	ALTERNATE	USE AND APPLICATION
(None)	AUDIO OSCILLATOR		Audio Oscillator, Hewlett Packard Co., Model 200AB	To perform operational checkout of doppler radar set AN/APN-501G.

29-25. OPERATIONAL CHECKOUT OF AN/APN-501G.

a. Make sure aircraft is electrically grounded to an unpainted surface on either main landing gear or nose gear.

b. Connect 28-volt d-c power to EXTERNAL D. C. POWER receptacle.

c. Push in DOPPLER DC circuit breaker on circuit breaker panel.

d. Energize No. 1 inverter, and push in DOPPLER AC circuit breaker on circuit breaker panel.

e. Set POWER switch on doppler control unit 2320-490/APN-501G to SLEW and allow a 10-minute warm-up period.

RESULT: Memory warning lights on groundspeed/drift angle indicator 450-655E/APN-501G shall come on, and warning flag shall indicate OFF.

f. Check press-to-test and dimming operation of memory warning lights.

g. Set POWER switch on doppler control unit to SLEW.

h. Manipulate G/S and DR slew switches.

RESULT: Groundspeed/drift angle indicator shall change indication in accordance with switch operation.

i. Set audio oscillator 200AB to 6969 ±5 cps, and connect the output to connector J01 on electrical test panel of signal-data comparator 2321-800/APN-501G, after removing its test panel and fuse cover.

j. Set test switch S01 on signal-data comparator to COMP; doppler system shall track on this signal.

k. Set the compass master directional indicator on navigator's instrument panel to NORTH.

l. Set MASTER switch on doppler control unit 2320-490/APN-501G to ON, permitting the system to go into "track".

RESULT: Memory warning lights on groundspeed/drift angle indicator shall go out, indicating tracking of doppler set.

m. Slowly adjust audio oscillator 200AB until groundspeed/drift angle indicator indicates an approximate groundspeed of 300 knots.

n. On the computer controller unit 2318-000/CMA-601G, set DISTANCE-TO-GO dials of STAGE I and II to indicate 20 NM, set DESIRED TRACK ANGLE dials to 000.0, at DISTANCE CROSS TRACK dials to zero NM, and set OFF-MAN-AUTO switch to AUTO.

RESULT: STAGE I DISTANCE-TO-GO dials shall count down to zero, and DISTANCE CROSS TRACK counters shall remain at 00.0 ±0.3 NM. After STAGE I DISTANCE-TO-GO counters reach zero, STAGE II counters shall start counting down. DISTANCE CROSS TRACK counters shall remain at 00.0 ± 0.3 NM.

o. Set POWER switch on doppler control unit to OFF.

p. Repeat computer controller settings as given in step n, and set POWER switch on doppler control unit to SLEW. Hold DRIFT switch until groundspeed/drift angle indicator shows 10 degrees right drift. Set POWER switch to ON, and allow the system to track.

RESULT: The aircraft symbol pointer on track error indicator 2450-650/CMA-601G shall indicate approximately 10 degrees right drift. The vertical bar of the indicator shall move slowly toward the left. The DISTANCE-TO-GO counters on the active stage shall count to zero NM, and ALERT light shall glow when the distance to go is 10 ±1 NM.

q. Set NORMAL-SEARCH RESCUE switch on the folding console to SEARCH RESCUE when STAGE I DISTANCE-TO-GO counters of the computer controller unit have reached zero.

RESULT: The counters shall increase speed by a factor of 10.

r. Pull out DOPPLER AC circuit breaker on the circuit breaker panel.

RESULT: AC OFF indicator light shall glow on computer controller.

s. Reset DOPPLER AC circuit breaker.

t. Set SLEW switch on doppler control unit to SLEW.

u. Check operation of antenna when DRIFT and PITCH switches, on antenna unit 2320-490/APN-501G, are actuated.

v. Disconnect test equipment.

w. De-energize doppler radar set and No. 1 inverter.

x. Pull out DOPPLER AC circuit breaker on circuit breaker panel.

y. Disconnect external power.

29-26. SYSTEM ANALYSIS.

TEST EQUIPMENT REQUIRED

FIGURE AND INDEX NO.	NAME	TYPE DESIGNATION	ALTERNATE	USE AND APPLICATION
(None)	MULTI-METER	AN/PSM-6	Multimeter, Federal Stock No. 6625-649-4593	To troubleshoot doppler radar set AN/APN-501G.

29-27. TROUBLESHOOTING AN/APN-501G. (See figures 29-3, 29-4, and 29-5.)

SYMPTOM	FUNCTIONAL LOOP	KEY TEST POINTS
Equipment inoperative.	Power. Doppler Control Unit.	1, 2, 3, and 5
No rf output.	Power. Receiver-Transmitter.	5
No indication with test switch set to MOD.	Receiver-Transmitter. Doppler Control Unit. Signal-Data Comparator.	
No output.	Power. Signal-Data Comparator. Receiver-Transmitter.	4 and 5
Antenna immobile.	Power. Signal-Data Comparator.	4 and 5
Slow or irregular antenna rotation.	Antenna.	
No rotor movement.	Power.	4 and 5
No instrument indications.	Power. Track Error Indicator. Groundspeed/Drift Angle Indicator. Computer Controller.	2, 3, 4, 5, and 6

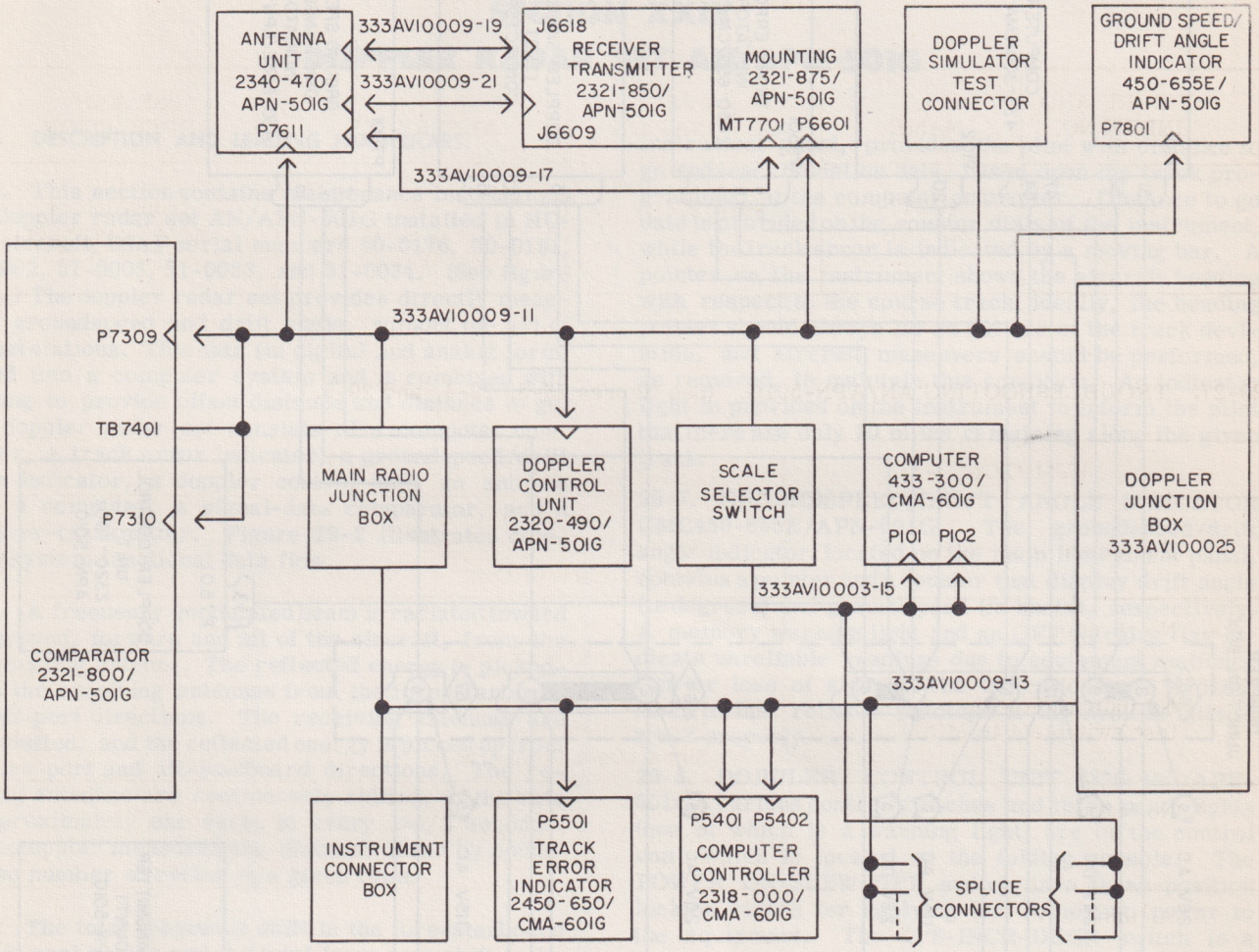

Figure 29-3. Doppler Radar Set AN/APN-501G Cabling Diagram

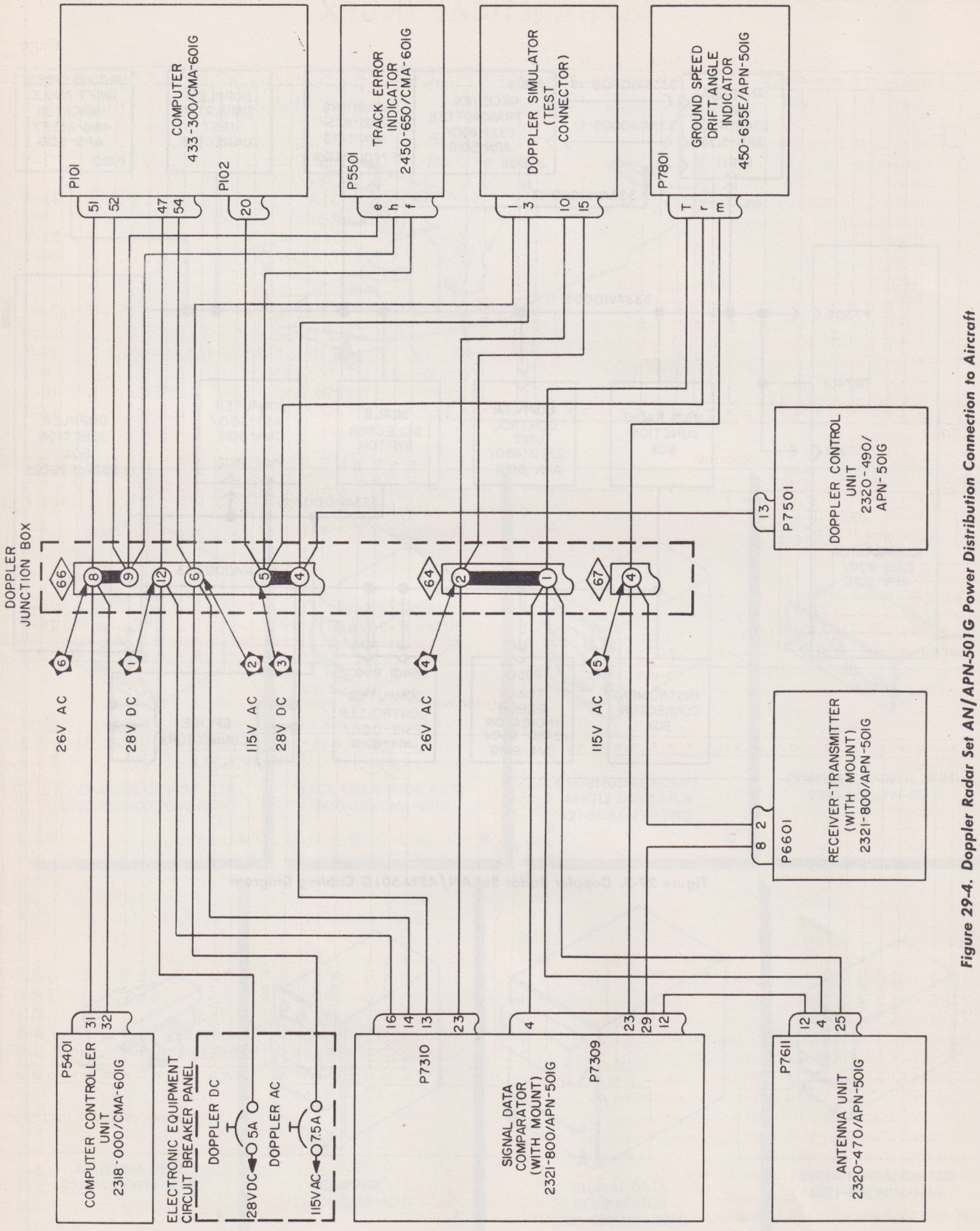

Figure 29-4. Doppler Radar Set AN/APN-501G Power Distribution Connection to Aircraft

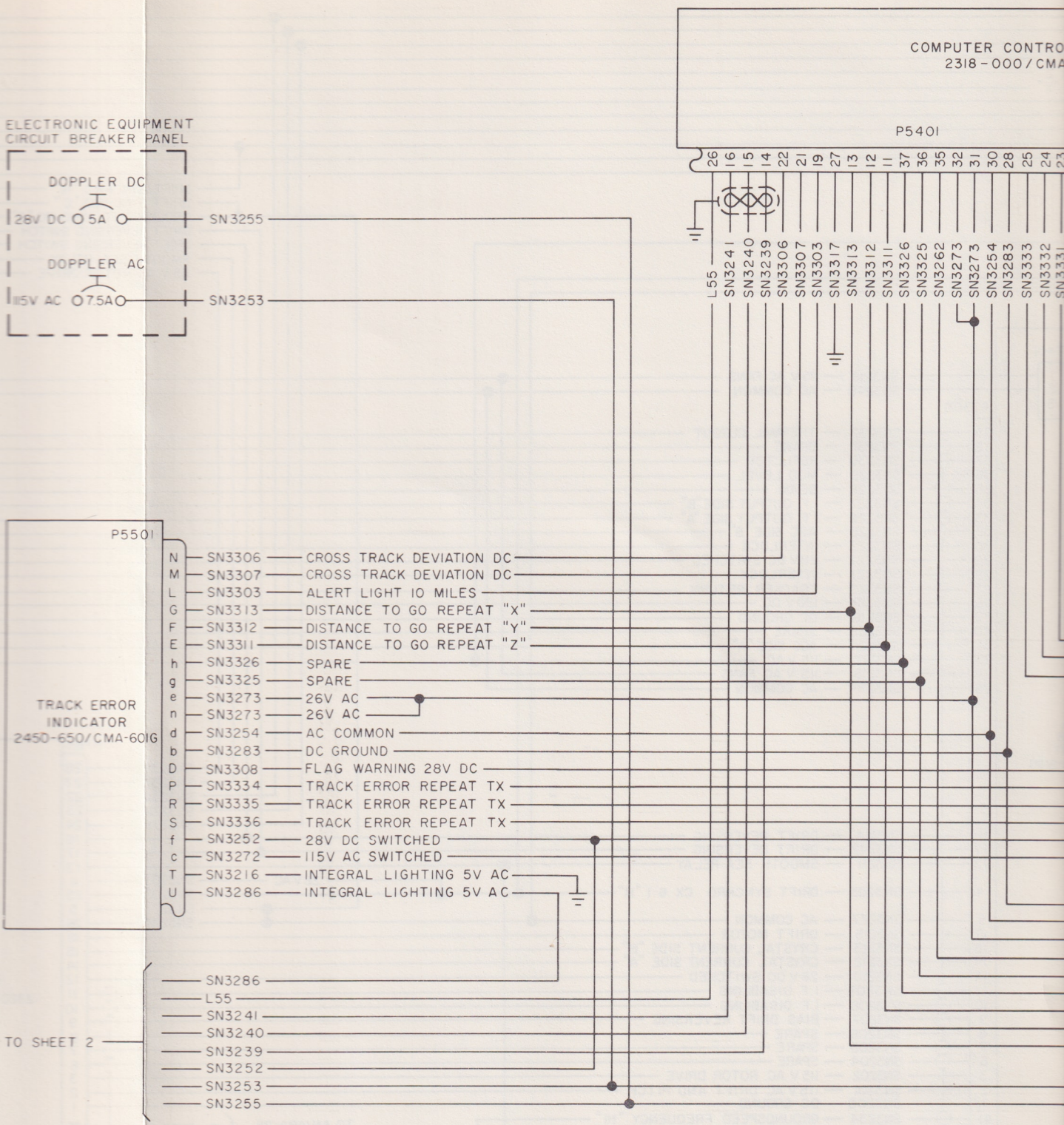
COMPUTER CONTRO
2318-000/CMA
P5401
26 16 15 14 22 21 19 27 13 12 11 37 36 35 32 31 30 28 25 24
L55 SN3241 SN3240 SN3239 SN3306 SN3307 SN3303 SN3317 SN3313 SN3312 SN3311 SN3326 SN3325 SN3262 SN3273 SN3254 SN3283 SN3333 SN3332
ELECTRONIC EQUIPMENT
CIRCUIT BREAKER PANEL
DOPPLER DC
28V DC 5A
SN3255
DOPPLER AC
115V AC 7.5A
SN3253
P5501
TRACK ERROR
INDICATOR
2450-650/CMA-601G
N SN3306 CROSS TRACK DEVIATION DC
M SN3307 CROSS TRACK DEVIATION DC
L SN3303 ALERT LIGHT 10 MILES
G SN3313 DISTANCE TO GO REPEAT "X"
F SN3312 DISTANCE TO GO REPEAT "Y"
E SN3311 DISTANCE TO GO REPEAT "Z"
h SN3326 SPARE
g SN3325 SPARE
e SN3273 26V AC
n SN3273 26V AC
d SN3254 AC COMMON
b SN3283 DC GROUND
D SN3308 FLAG WARNING 28V DC
P SN3334 TRACK ERROR REPEAT TX
R SN3335 TRACK ERROR REPEAT TX
S SN3336 TRACK ERROR REPEAT TX
f SN3252 28V DC SWITCHED
c SN3272 115V AC SWITCHED
T SN3216 INTEGRAL LIGHTING 5V AC
U SN3286 INTEGRAL LIGHTING 5V AC
TO SHEET 2
SN3286
L55
SN3241
SN3240
SN3239
SN3252
SN3253
SN3255

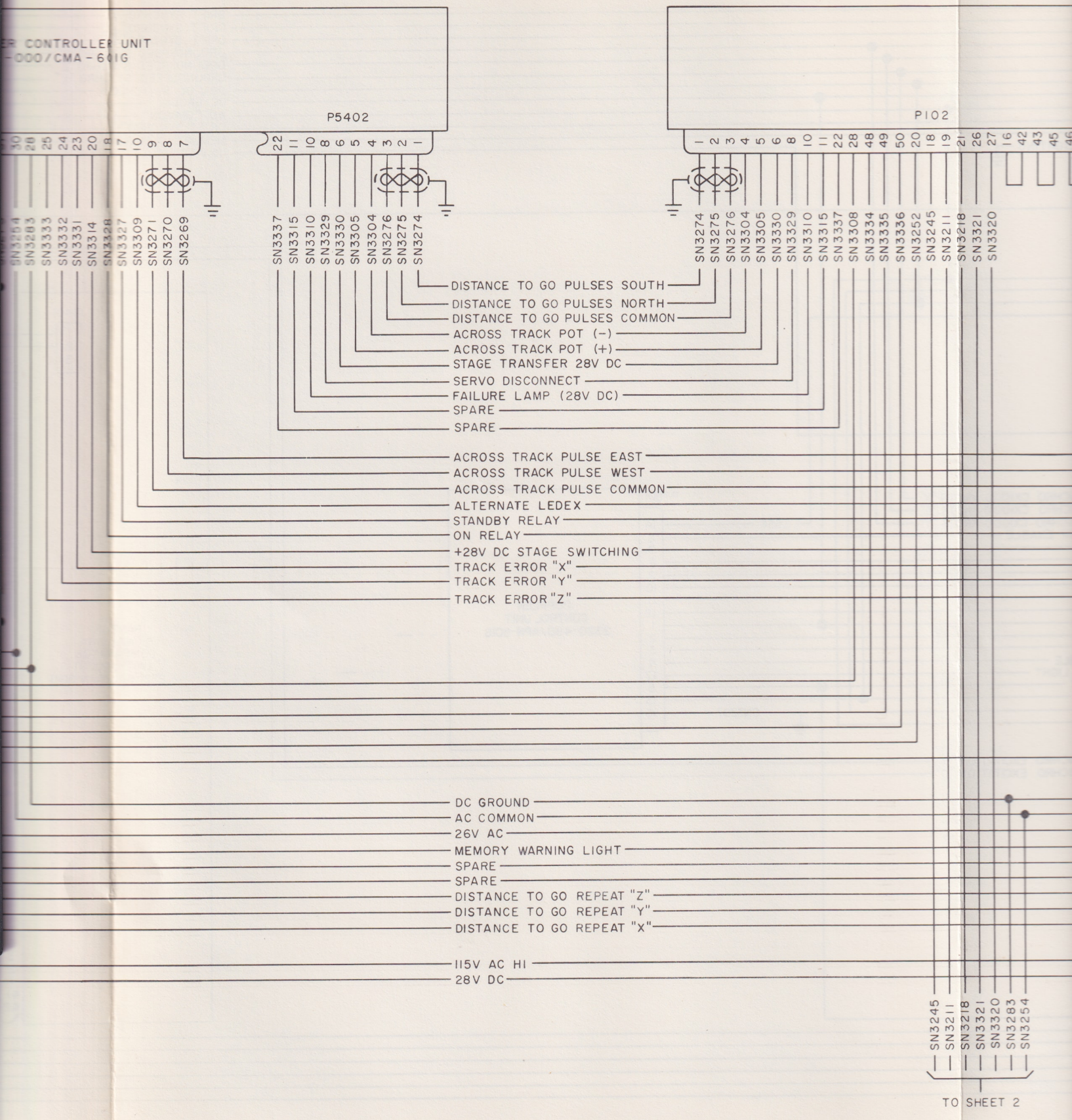
ER CONTROLLER UNIT
-000/CMA-601G
P5402
P102
SN3337
SN3315
SN3310
SN3329
SN3330
SN3305
SN3304
SN3276
SN3275
SN3274
SN3274
SN3275
SN3276
SN3304
SN3305
SN3330
SN3329
SN3310
SN3315
SN3337
SN3308
SN3334
SN3335
SN3336
SN3252
SN3245
SN3211
SN3218
SN3321
SN3320
SN3254
SN3283
SN3333
SN3332
SN3331
SN3314
SN3328
SN3327
SN3309
SN3271
SN3270
SN3269
DISTANCE TO GO PULSES SOUTH
DISTANCE TO GO PULSES NORTH
DISTANCE TO GO PULSES COMMON
ACROSS TRACK POT (-)
ACROSS TRACK POT (+)
STAGE TRANSFER 28V DC
SERVO DISCONNECT
FAILURE LAMP (28V DC)
SPARE
SPARE
ACROSS TRACK PULSE EAST
ACROSS TRACK PULSE WEST
ACROSS TRACK PULSE COMMON
ALTERNATE LEDEX
STANDBY RELAY
ON RELAY
+28V DC STAGE SWITCHING
TRACK ERROR "X"
TRACK ERROR "Y"
TRACK ERROR "Z"
DC GROUND
AC COMMON
26V AC
MEMORY WARNING LIGHT
SPARE
SPARE
DISTANCE TO GO REPEAT "Z"
DISTANCE TO GO REPEAT "Y"
DISTANCE TO GO REPEAT "X"
115V AC HI
28V DC
SN3245
SN3211
SN3218
SN3321
SN3320
SN3283
SN3254
TO SHEET 2

Figure 29-5.

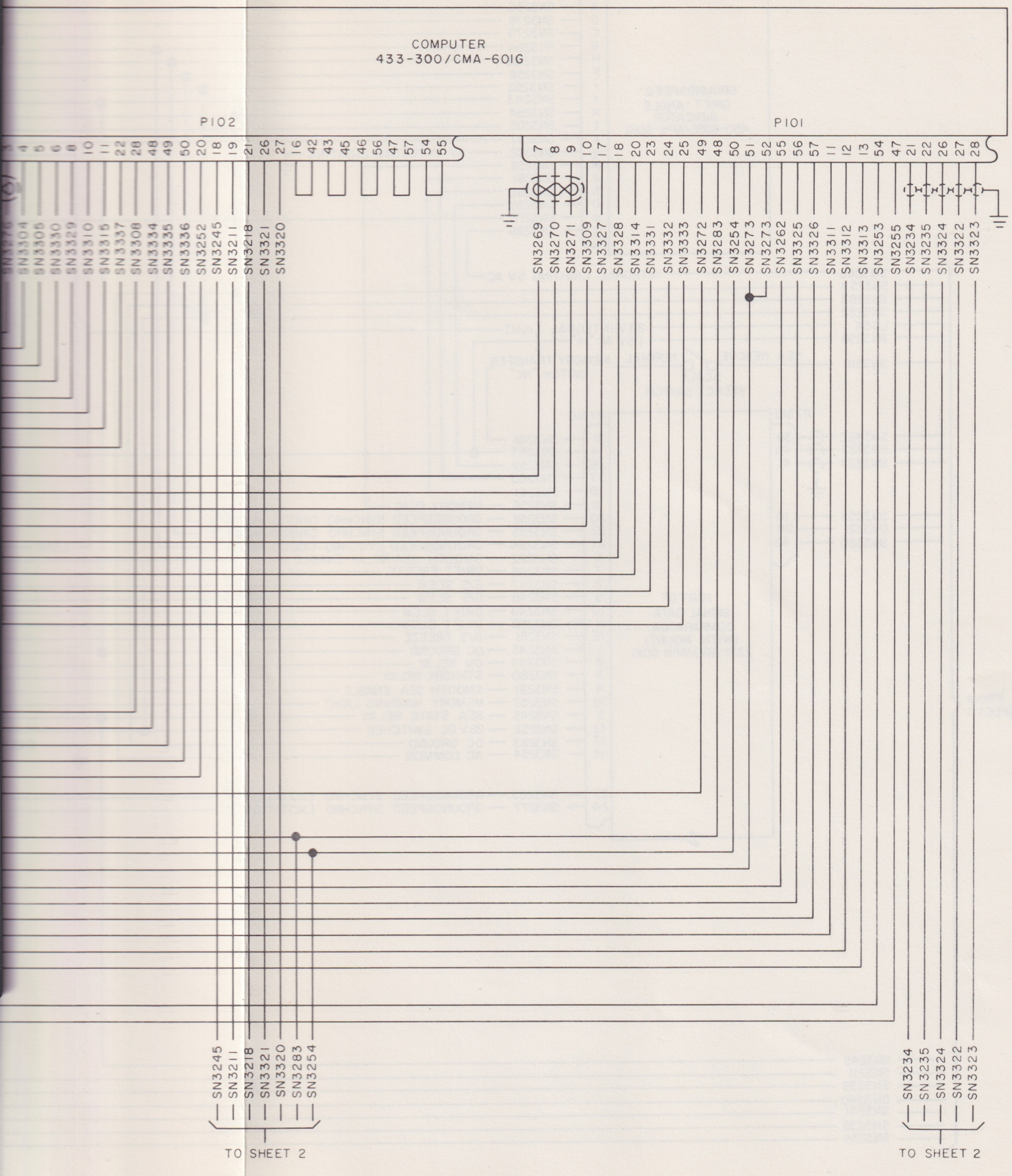

Figure 29-5. Doppler Radar Set AN/APN-501G System Intercabling (Sheet 1 of 2)

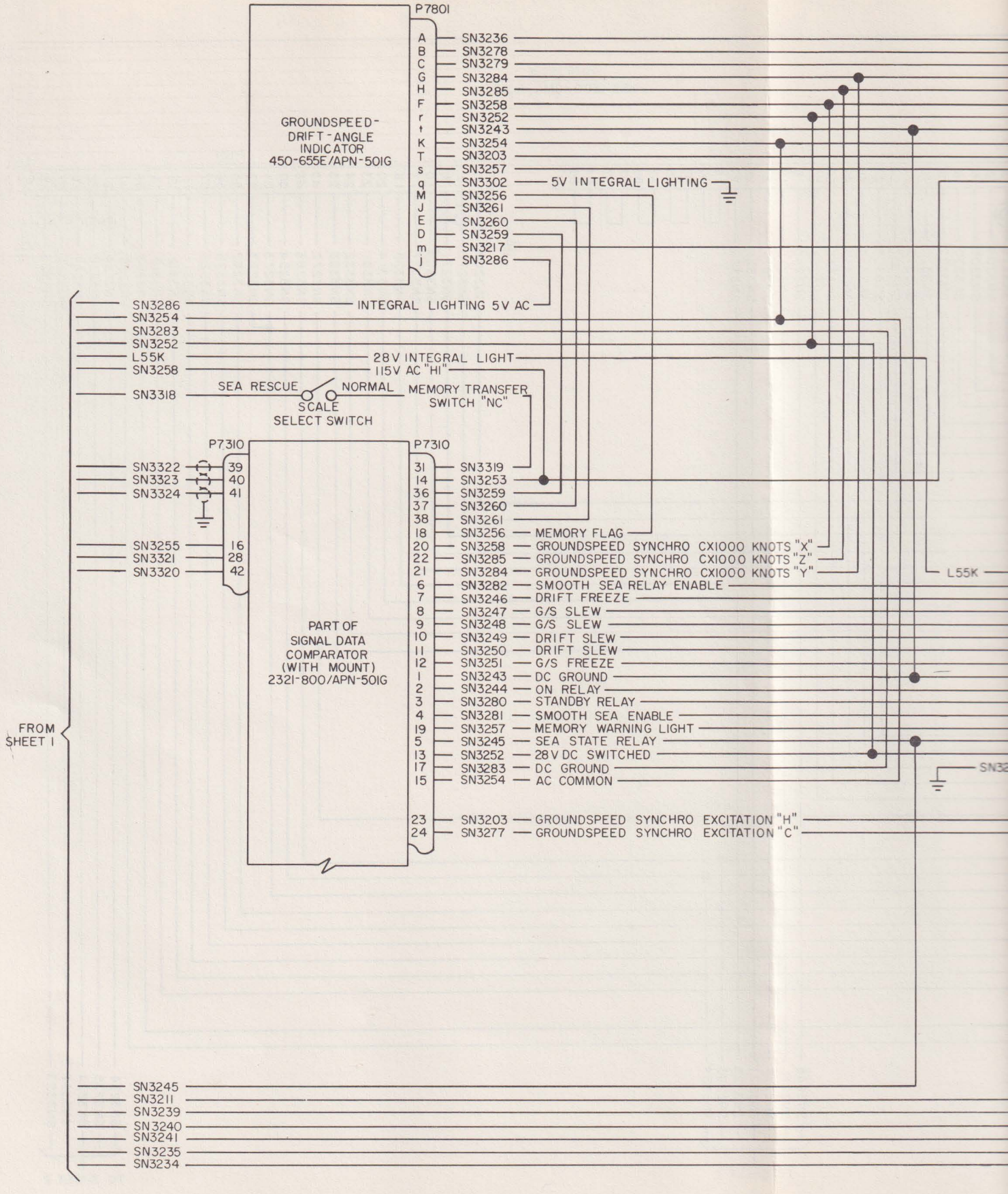
P7801
GROUNDSPEED-
DRIFT-ANGLE
INDICATOR
450-655E/APN-501G
A SN3236
B SN3278
C SN3279
G SN3284
H SN3285
F SN3258
r SN3252
t SN3243
K SN3254
T SN3203
s SN3257
q SN3302
M SN3256
J SN3261
E SN3260
D SN3259
m SN3217
j SN3286
5V INTEGRAL LIGHTING
SN3286 INTEGRAL LIGHTING 5V AC
SN3254
SN3283
SN3252
L55K 28V INTEGRAL LIGHT
SN3258 115V AC "HI"
SN3318
SEA RESCUE
NORMAL
SCALE
SELECT SWITCH
MEMORY TRANSFER
SWITCH "NC"
P7310
P7310
SN3322 39
SN3323 40
SN3324 41
SN3255 16
SN3321 28
SN3320 42
PART OF
SIGNAL DATA
COMPARATOR
(WITH MOUNT)
2321-800/APN-501G
31 SN3319
14 SN3253
36 SN3259
37 SN3260
38 SN3261
18 SN3256 MEMORY FLAG
20 SN3258 GROUNDSPEED SYNCHRO CX1000 KNOTS "X"
22 SN3285 GROUNDSPEED SYNCHRO CX1000 KNOTS "Z"
21 SN3284 GROUNDSPEED SYNCHRO CX1000 KNOTS "Y"
6 SN3282 SMOOTH SEA RELAY ENABLE
7 SN3246 DRIFT FREEZE
8 SN3247 G/S SLEW
9 SN3248 G/S SLEW
10 SN3249 DRIFT SLEW
11 SN3250 DRIFT SLEW
12 SN3251 G/S FREEZE
1 SN3243 DC GROUND
2 SN3244 ON RELAY
3 SN3280 STANDBY RELAY
4 SN3281 SMOOTH SEA ENABLE
19 SN3257 MEMORY WARNING LIGHT
5 SN3245 SEA STATE RELAY
13 SN3252 28V DC SWITCHED
17 SN3283 DC GROUND
15 SN3254 AC COMMON
23 SN3203 GROUNDSPEED SYNCHRO EXCITATION "H"
24 SN3277 GROUNDSPEED SYNCHRO EXCITATION "C"
L55K
FROM
SHEET 1
SN3245
SN3211
SN3239
SN3240
SN3241
SN3235
SN3234

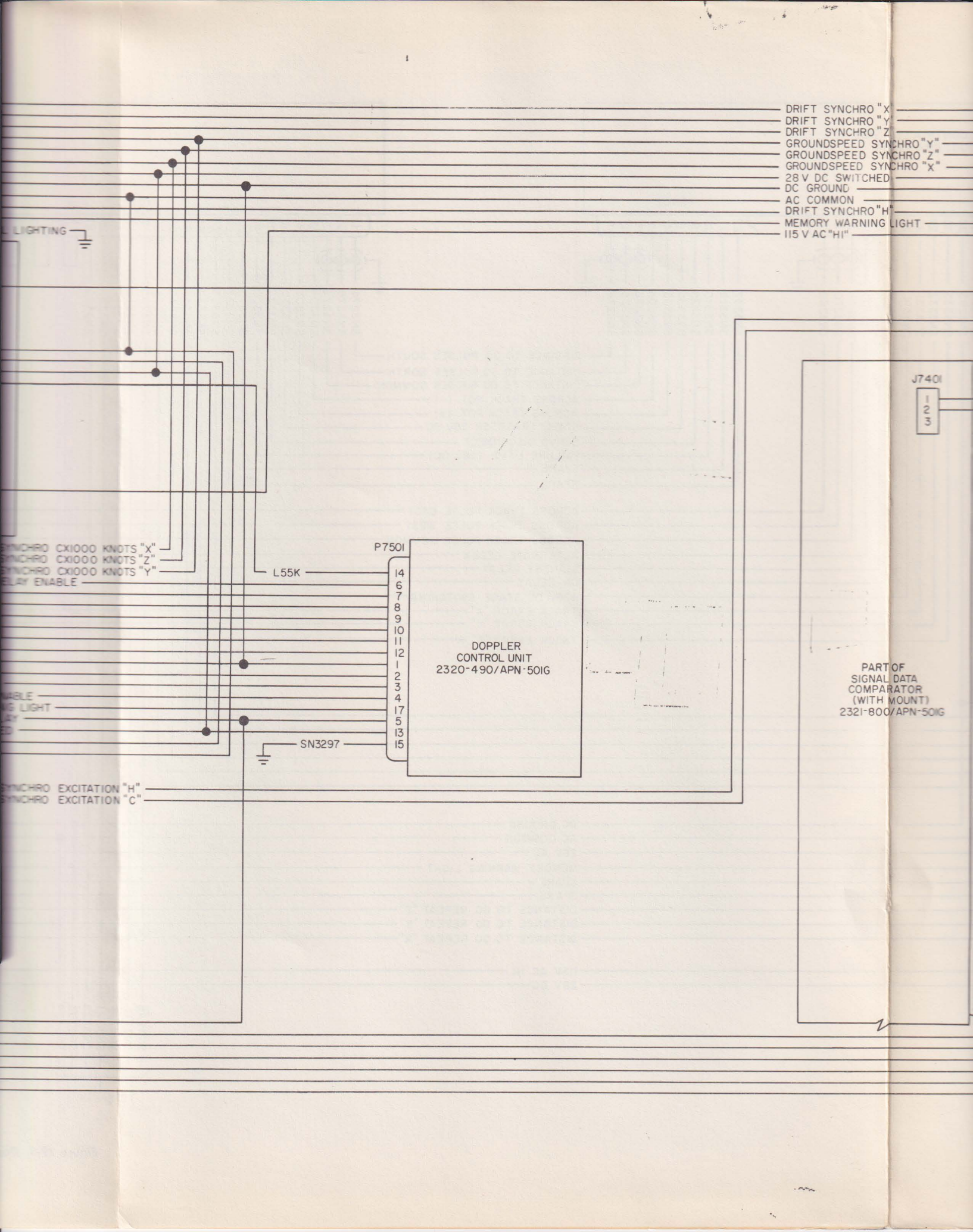
DRIFT SYNCHRO "X"
DRIFT SYNCHRO "Y"
DRIFT SYNCHRO "Z"
GROUNDSPEED SYNCHRO "Y"
GROUNDSPEED SYNCHRO "Z"
GROUNDSPEED SYNCHRO "X"
28 V DC SWITCHED
DC GROUND
AC COMMON
DRIFT SYNCHRO "H"
MEMORY WARNING LIGHT
115 V AC "HI"
L LIGHTING
J7401
1
2
3
P7501
L55K
14
6
7
8
9
10
11
12
1
2
3
4
17
5
13
15
SN3297
DOPPLER
CONTROL UNIT
2320-490/APN-501G
PART OF
SIGNAL DATA
COMPARATOR
(WITH MOUNT)
2321-800/APN-501G
SYNCHRO CX1000 KNOTS "X"
SYNCHRO CX1000 KNOTS "Z"
SYNCHRO CX1000 KNOTS "Y"
ELAY ENABLE
NABLE
NG LIGHT
AY
ED
SYNCHRO EXCITATION "H"
SYNCHRO EXCITATION "C"

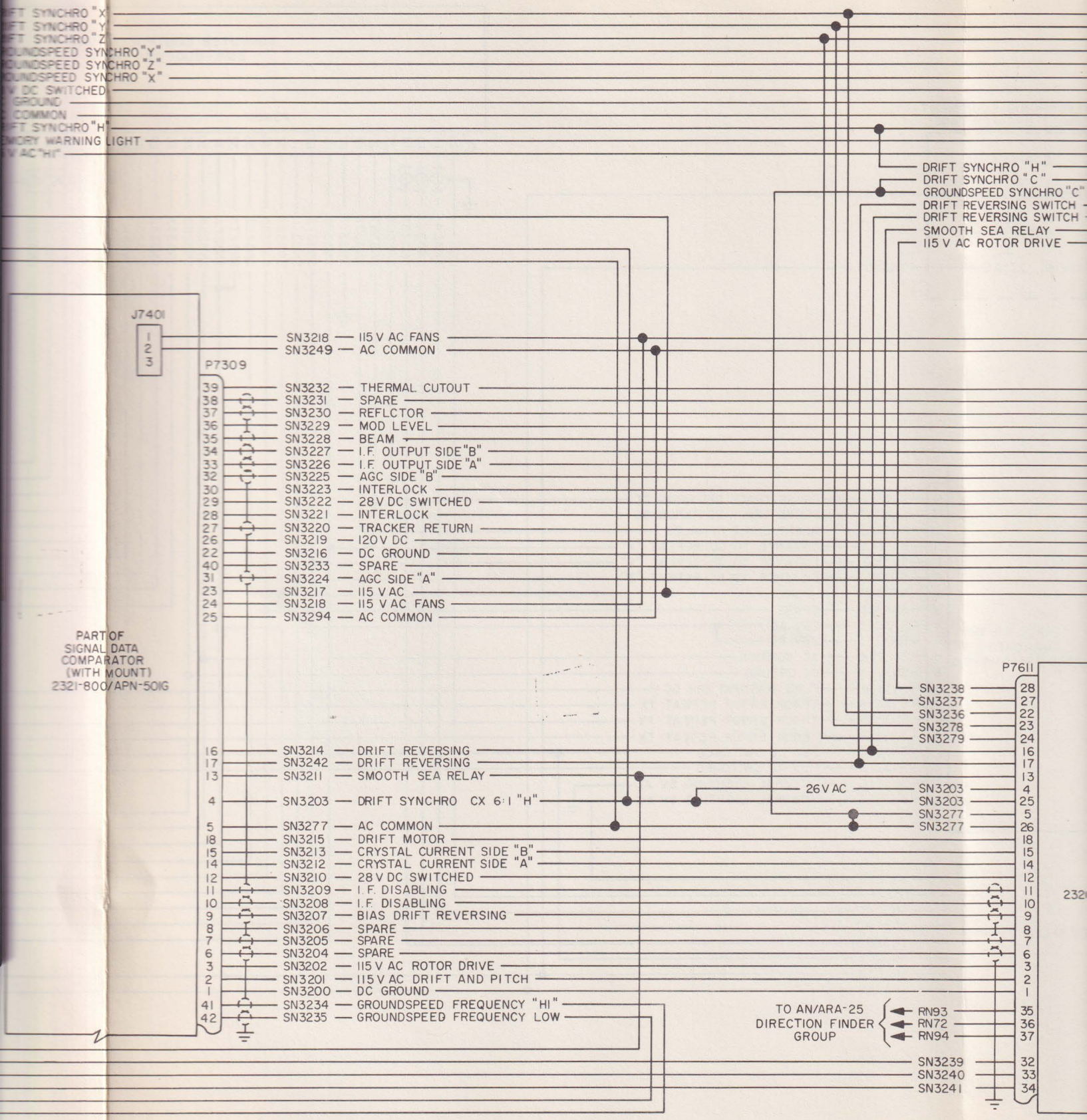

Figure 29-5. Doppler Rad

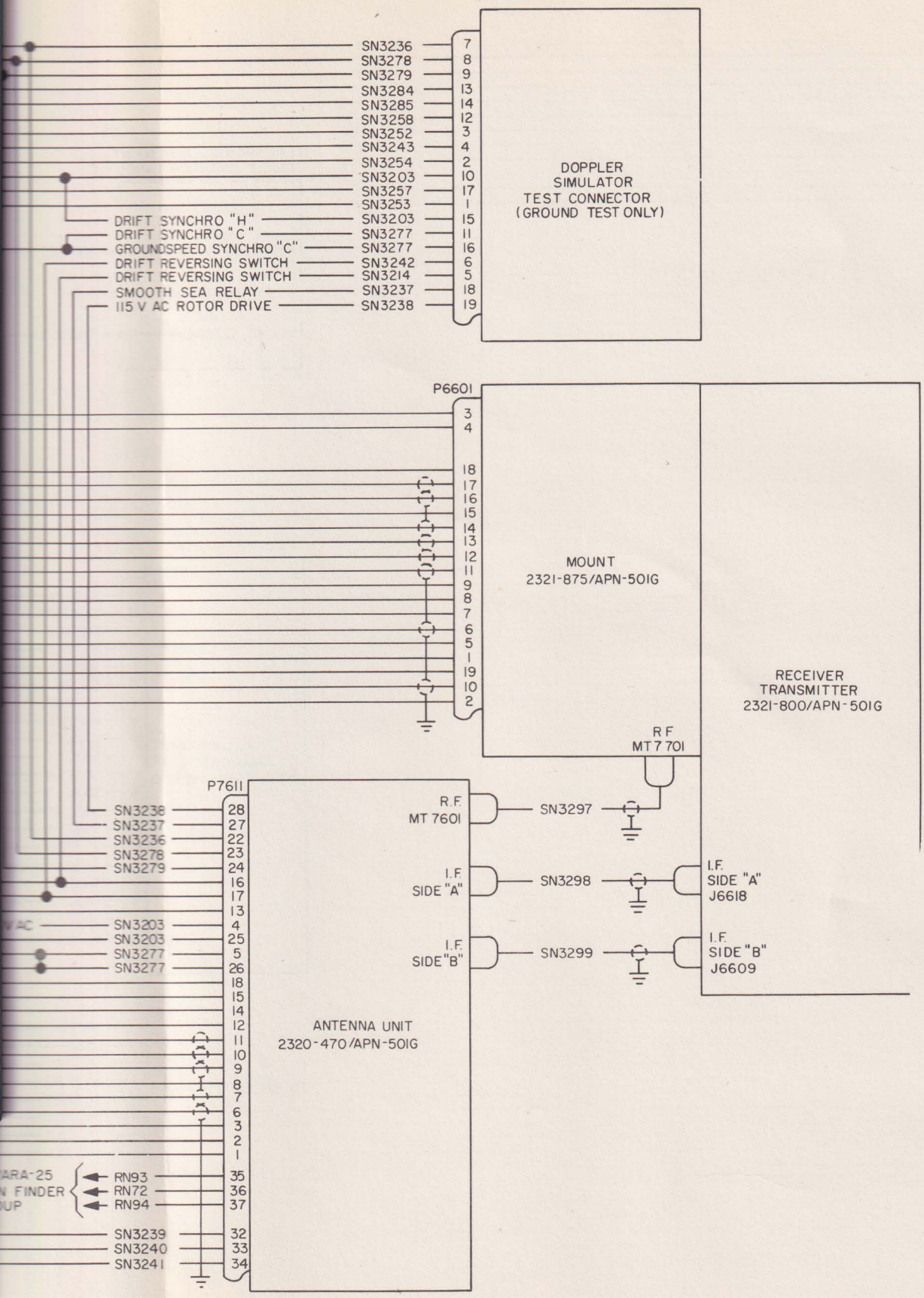

Figure 29-5. Doppler Radar Set AN/APN-501G System Intercabling (Sheet 2 of 2)

ALPHABETICAL INDEX

A

Page

Adjustment of AN/APN-9 20-8
Adjustment of N-1 Compass System 2-8
Adjustment of RC-193A 7-4
Adjustment of Receiver R-5A/ARN-7
Sensitivity 10-6
Adjustment of R-122A/ARN-12 ..... 6-5, 6-6
Alignment of Control Panel C-411/A 10-6
Amplifier Adapter 1-3
Amplifier AM-26/AIC 14-1
Amplifier AM-300/AIC, AF 15-1
Amplifier AM-608/ARA-25 ..... 24-4, 28-5
Amplifier, Compass 2-1
Amplifier, Gyro-Fluxgate 1-1
Amplifier, Repeater Indicator 2-1
Antenna 12-1
Antenna and Antenna Reel AT-4/APN-1 ... 20-1
Antenna AS-148/ARA-8A 23-1
Antenna AS-207/CRT-3 26-1
Antenna AS-215/ARN 6-2
Antenna AS-215/ARN 7-2
Antenna AS-27/ARN-5 4-2
Antenna AS-287/APS-31 or AS-287B/
APS-31 Assembly 21-1
Antenna AS-313/ARN-6, Loop 9-1
Antenna AS-578/ARA-25 ..... 24-4, 28-5
Antenna 37R-2 28-1
Antenna 111SC1001-3 28-5
Antenna Unit 2320-470/APN-501G 29-1
Antenna LP-21-AM, Loop 10-1
Antenna Mast AN-104-B 11-1, 11A-1
Antenna, Nondirectional Sense 9-1
Antenna, Nondirectional Sense 10-1
Antenna Relay RE-13/ARA-8A 23-1
Antenna SP90027 13-1
Antenna SP-9004 3-2
Antenna 110-7 17-3
Antenna 91611-1 25-2
Antennas RD-R-1010-3 and AS-133/APX .. 5-1
Antennas RD- R-1114-1 and RD-R-1114-2 . 18-1
Attitude Indicator 1-1
Autotransformer TF-106A/U, Variable ... 21-3

C

Computer 433-300/CMA-601G 29-3
Computer Controller 2318-000/CMA-601G . 29-1
Control Box, Antenna 20-1
Control C-166/AIC-3, Master Station 14-1
Control C-301/ARA-8A, Automatic Volume 23-1
Control C-626/ARC-27, Master Set 13-1
Control C-628/ARC-27, Remote Set 13-1
Control C-824/AIC-10, Master Panel 16-1
Control C-826/AIC-10, Auxiliary Panel... 16-1
Control Panel C-1763/ARN-21 5-1
Control Panel C-402/A or C-402A/A 23-1
Control Panel C-403/A 9-1
Control Panel C-404/A or C-404A/A 11-1
Control Panel C-411/A 10-1
Control Panel C-570A/A 25-2

Page

Control Panel C-629/APX-6 17-2
Control Panel C-760/A 8-1
Control Panel C-774A/UPX-7 18-1
Control Panel C-790/ARA-26 22-1
Control, Turn and Pitch 1-1
Control Unit C-289/APS-31 or
C-729/APS-31A 21-1
Controller, Autopilot 1-1
Coupler CU-105/APS-31A 21-3
Coupler CU-167/APN-9A 20-1

D

Description and Leading Particulars, 51S-1B 12A-1
Direction Finder Group AN/ARA-25 28-5
Doppler Control Unit 2320-490/APN-501G . 29-1
Dynamotor DY-66/ARN-14 8-1
Dynamotor DY-76/AIC-10 16-1
Dynamotor DY-77/AIC-10 16-1

E

Electronic Control Amplifier AM-291/
APN-22 27-1
Emergency Disconnect 1-4

F

Filter Assembly F-90/AIC 15-1
Filter F-90/AIC 16-1

G

Groundspeed/Drift Angle Indicator
CMC450-655E/APN-501G 29-1
Gyro, Directional 2-1
Gyroscope Unit CN-51/APS-31 21-1

H

Height Indicator ID-257/APN-22 27-1

I

Indicator I-81-N 10-1
Indicator I-82-A 10-1
Indicator ID-14/APN-1, Altitude, and
Indicator Lights 19-1
Indicator ID-162/APS-31 21-1
Indicator ID-249A/ARN, Course 8-1
Indicator ID-250/ARN, Course 8-3
Indicator ID-307/ARN, Azimuth 5-1
Indicator ID-310/ARN, Range 5-1
Indicator IP-219/APX, Range 18-1
Indicator Lamp 7-2
Indicator, Master Directional 1-1
Indicator, Master Directional 2-1
Indicator, Repeater 1-4
Indicator, Repeater 2-1
Indicator, Turn and Slip 1-1

Page

Interphone Control C-8213/AIC-10 16-1
Interphone Station Control 14-1
Interphone Stations 15-1
Inverter PU-92A/U 21-3

J

Jack Box J-139/AIC 14-1
Junction Box, Power 1-3
Junction Box J-68/ARC-3, Power 11-1
Junction Box J-90/AIC-3 14-1

K

Keyer KY-65/ARA-26 22-1

M

Master Stations 15-1
Mixer Amplifier AM-142/AIC 15-1
Modulator Keying Unit MD-34/ARA-8A ... 23-1
Modulator MD-60A/APS-31 21-1
Multichannel Amplifier 1-3

N

Network CV-279/ARN, Phase Detecting ... 5-1

O

Operational Checkout of AN/AIC-10 16-8
Operational Checkout of AN/AIC-3 14-1
Operational Checkout of AN/AIC-8 15-1
Operational Checkout of AN/APN-1 19-3
Operational Checkout of AN/APN-9 20-1
Operational Checkout of AN/APN-9A 20-4
Operational Checkout of AN/APN-22 27-3
Operational Checkout of AN/APN-501G ... 29-5
Operational Checkout of AN/APS-31 or AN/APS-31A 20-4
Operational Checkout of AN/APX-28 18-3
Operational Checkout of AN/ARA-25 24-5
Operational Checkout of AN/ARA-26 22-1
Operational Checkout of AN/ARA-8A 23-1
Operational Checkout of AN/ARC-27 13-1
Operational Checkout of AN/ARC-3 11-1
Operational Checkout of AN/ARC-8 12-1
Operational Checkout of AN/ARN-12 6-3
Operational Checkout of AN/ARN-14 8-5
Operational Checkout of AN/ARN-18 3-2
Operational Checkout of AN/ARN-21 5-5
Operational Checkout of AN/ARN-5B 4-2
Operational Checkout of AN/ARN-6 9-1
Operational Checkout of AN/ARN-7 10-1
Operational Checkout of AN/CRT-3 26-1
Operational Checkout of UHF Command Set AN/ARC-27 28-6
Operational Checkout of UHF Command Set AN/ARC-27 with Direction Finder Group AN/ARA-25 28-7
Operational Checkout of VHF Radio Set AN/ARC-73 - Communications Operation 28-6

Page

Operational Checkout of VHF Radio Set AN/ARC-73 - Receiver Operation 28-6
Operational Checkout of VHF Radio Set AN/ARC-73 - Transmitter Operation .. 28-6
Operational Checkout of VHF Radio Set AN/ARC-73 with Direction Finder Group AN/ARA-25 28-7
Operational Checkout of F-1 Autopilot 1-8
Operational Checkout of Impact Switch SA-3/A 17-4
Operational Checkout of N-1 Compass System 2-5
Operational Checkout of Range Receiver Set 25-2
Operational Checkout of RC-193A 7-2

P

Panel RD-R-1049, Instrument Selector ... 5-3
Preamplifier, AM-3969/ARA-25 24-4

R

Radar Receiver - Transmitter RT-160/APN-22 27-1
Radio Control Indicator ID-251/ARN 8-5
Radio Set Control C-1904/ARC-27 28-5
Radio Set Control 614U-6/VHF-101 ..... 11A-1
Receiver 51S-1B 12A-1
Receiver 51X-2B 28-1
Receiver 51X-2B/VHF-101 ..... 11A-1
Receiver BC-1333, Radio 7-1
Receiver BC-348-Q 12-1
Receiver BC-453-B 25-1
Receiver R-101A/ARN-6 9-1
Receiver R-122A/ARN-12 6-2
Receiver R-252/ARN-14 8-1
Receiver R-268/ARN-5 4-2
Receiver R-322/ARN-18 3-2
Receiver R-5A/ARN-7 10-1
Receiver R-77A/ARC-3 11-1
Receiver-Indicator R-65/APN-9 or R-249/APN-9A 20-1
Receiver-Transmitter RT-101A/APS-31 or RT-193/APS-31A 21-1
Receiver-Transmitter RT-178/ARC-27 ... 13-1
Receiver-Transmitter RT-198B/UPX-7 ... 18-1
Receiver-Transmitter RT-220/ARN-21 ... 5-1
Receiver-Transmitter RT-7/APN-1 19-1
Receiver-Transmitter RT-82/APX-6 17-2
Receiver-Transmitter 2321-850/APN-501G 29-4
Relay Box RE-41/APS-31 21-3
Relay RE-13/ARA-8 28-5
Relay RE-120/ARA-25 ..... 24-4, 28-5
Remote Control Unit 614U-6 28-1
Removal of Antenna 17-6
Removal of Antenna and Receiver-Transmitter 21-11, 21-12
Removal of Antenna AS-133/APX 5-6
Removal of Antenna AS-148/ARA-8A 23-4
Removal of Antenna AS-215/ARN 6-5, 6-6
Removal of Antenna AS-27/ARN-5 4-4
Removal of Antenna Mast AN-104-B 11-5
Removal of Antenna RD-R-1010-3 5-8
Removal of Antenna SP-9003 ..... 8-9, 8-10
Removal of Antenna SP-9004 3-5

Page

Removal of Bow Radome 21-11, 21-12
Removal of Loop Antenna LP-21-AM 10-4
Removal of Range Receiver Set Antenna .. 25-3
Removal of Receiver-Transmitter RT-82/APX-6 17-5
Removal of Servo Assembly 1-9, 1-10
Removal of Turn and Pitch Control 1-9, 1-10
Replacement of Antenna 17-6
Replacement of Antenna and Receiver-Transmitter 21-11, 21-12
Replacement of Antenna AS-133/APX 5-6
Replacement of Antenna AS-148/ARA-8A .. 23-4
Replacement of Antenna AS-215/ARN ... 6-5, 6-6
Replacement of Antenna AS-27/ARN-5 4-4
Replacement of Antenna Mast AN-104-B .. 11-5
Replacement of Antenna RD-R-1010-3 5-8
Replacement of Antenna SP-9003 ..... 8-9, 8-10
Replacement of Antenna SP-9004 3-5
Replacement of Bow Radome 21-11, 21-12
Replacement of Loop Antenna LP-21-AM .. 10-4
Replacement of Range Receiver Set Antenna 25-3
Replacement of Receiver-Transmitter RT-82/APX-6 17-5
Replacement of Servo Assembly 1-9, 1-10
Replacement of Turn and Pitch Control .. 1-9, 1-10
Resetting Emergency Disconnect 1-9, 1-10

S

Servo Assembly 1-3
Signal-Data Comparator 2321-800/APN-501G 29-3
Signal Lamp M-308-B 26-1
Slaving Control 2-5
Switch, Autopilot 1-1
Switch SA-1A/APN-1, Altitude Limit 19-1
Switch SA-3/A, Impact 17-3
Switch SA-314/APX, Antenna Lobe 18-1
Switch, Clutch 1-4
Synchronizer SN-36/APS-31 21-1

T

Track Error Indicator 2450-650/CMA-601G 29-1
Transceiver RT-178/ARC-27 28-5
Transmitter 17L-7A 28-1
Transmitter 17L-7A/VHF-101 ..... 11A-1
Transmitter, Gyro Fluxgate 1-1
Transmitter, Remote Compass 2-1
Transmitter T-47/ART-13 12-1
Transmitter T-67/ARC-3 or Transmitter T-67/ARC-3 or T-67B/ARC-3 11-1
Transmitter T-74/CRT-3 26-1
Troubleshooting 51S-1B 12A-2
Troubleshooting AN/AIC-10 16-8
Troubleshooting AN/AIC-3 14-5
Troubleshooting AN/AIC-8 15-8
Troubleshooting AN/APN-1 ..... 19-7, 19-8
Troubleshooting AN/APN-9 or AN/APN-9A 20-7
Troubleshooting AN/APN-22 27-4
Troubleshooting AN/APN-501G 29-6
Troubleshooting AN/APS-31 or AN/APS-31A 21-8
Troubleshooting AN/APX-28 18-5
Troubleshooting AN/APX-6 17-4
Troubleshooting AN/ARA-25 24-6
Troubleshooting AN/ARA-26 22-3
Troubleshooting AN/ARA-8A 23-3
Troubleshooting AN/ARC-27 13-5
Troubleshooting AN/ARC-3 11-3
Troubleshooting AN/ARC-8 12-3
Troubleshooting AN/ARN-12 6-3
Troubleshooting AN/ARN-14 8-7
Troubleshooting AN/ARN-18 3-4
Troubleshooting AN/ARN-21 5-5
Troubleshooting AN/ARN-5B 4-3
Troubleshooting AN/ARN-6 ..... 9-7, 9-8
Troubleshooting AN/ARN-7 10-3
Troubleshooting F-1 Autopilot 1-8
Troubleshooting N-1 Compass System ... 2-7
Troubleshooting Range Receiver Set 25-2
Troubleshooting RC-193A 7-4
Troubleshooting VHF Radio Set AN/ARC-73 and Related Equipment ... 28-8

U

UHF Command Set AN/ARC-27 28-1

V

VHF Radio Set AN/ARC-73 28-1